City of Blaine

Comprehensive Water System Plan

November 2009

Volume 1 of 2

CHS ENGINEERS, LLC

CITY OF BLAINE

COMPREHENSIVE WATER SYSTEM PLAN

November 2009

CHS ENGINEERS, LLC

RODNEY C. LANGER JR.
STATE OF WASHINGTON
30046
REGISTERED
PROFESSIONAL ENGINEER
1.25.10

VOLUME 1

TABLE OF CONTENTS

		Page
EXECUTIVE SUMMARY		ES-1
CHAPTER 1	**DESCRIPTION OF WATER SYSTEM**	
1.1	Ownership and Management	1 – 1
1.2	Authorization	1 – 1
1.3	System Background and Characteristics	1 – 1
1.3.1	*Historical Water Systems Development*	1 – 1
1.3.2	*Topography*	1 – 3
1.3.3	*Climate*	1 – 3
1.3.4	*Surface Waters*	1 – 4
1.3.5	*Neighboring Purveyors*	1 – 4
1.3.6	*Ordinances*	1 – 4
1.4	Inventory of Existing Facilities	1 – 4
1.4.1	*Sources*	1 – 4
1.4.2	*Storage*	1 – 6
1.4.3	*Distribution System*	1 – 6
1.4.4	*Booster Pump Stations*	1 – 7
1.4.5	*Connections*	1 – 7
1.4.6	*Interties*	1 – 7
1.5	Related Plans	1 – 9
1.6	Comments from Agencies and Adjacent Purveyors	1 – 10
1.7	Existing Service Area and Characteristics	1 – 10
1.8	Future Service Area – “Retail Service Area”	1 – 10
1.9	Service Area Agreements	1 – 12
1.10	Service Area Policies	1 – 12
1.10.1	*Wholesaling Water*	1 – 12
1.10.2	*Wheeling Water*	1 – 12
1.10.3	*Annexation*	1 – 12
1.10.4	*Direct Connection and Satellite/Remote Systems*	1 – 12
1.10.5	*Design and Performance Standards*	1 – 13
1.10.6	*Water Service Extensions*	1 – 13
1.10.7	*Oversizing*	1 – 13
1.10.8	*Latecomers Agreement*	1 – 13
1.10.9	*Cross-Connection Control Policy*	1 – 13
1.11	Conditions of Service	1 – 13
1.11.1	*Developer Process for Water*	1 – 14
1.11.2	*Applicable Fees and Charges*	1 – 17
1.12	Complaints	1 – 24

CHAPTER 2 PLANNING DATA AND WATER DEMAND FORECASTING **Page**

2.1 Existing Conditions 2 – 1
2.1.1 *Current Residential Population* 2 – 1
2.1.2 *Total Service Connections* 2 – 3
2.1.3 *Water Use Data Collection* 2 – 3
2.1.4 *Equivalent Residential Unit (ERU)* 2 – 5

2.2 Community and Water Usage Projections 2 – 7
2.2.1 *Projected Land Use* 2 – 7
2.2.2 *Projected Population* 2 – 8
2.2.3 *Projected Non-Residential Water Needs* 2 – 11
2.2.4 *Projected Non-Revenue Water* 2 – 12
2.2.5 *Water Rates and Rate Impacts on Water Demand* 2 – 13
2.2.6 *Water Demand Forecasting* 2 – 13

CHAPTER 3 SYSTEM ANALYSIS **Page**

3.1 Performance and Design Standards 3 – 1
3.1.1 *Abbreviations* 3 – 2
3.1.2 *Reference Datum* 3 – 2
3.1.3 *Period of Design* 3 – 2
3.1.4 *Water Quality and Design Parameters* 3 – 3
3.1.5 *Demand Factors: ADD, MDD and PHD* 3 – 4
3.1.6 *Storage Requirements* 3 – 8
3.1.7 *Required Fire Flow Rate and Duration* 3 – 10
3.1.8 *Distribution System Pressure* 3 – 10
3.1.9 *Minimum Pipe Size/Looping* 3 – 11
3.1.10 *Valve and Hydrant Spacing* 3 – 11

3.2 Water Quality Analysis 3 – 11

3.3 System Description and Analysis 3 – 13
3.3.1 *Source of Supply* 3 – 13
3.3.2 *Water Treatment* 3 – 21
3.3.3 *Storage* 3 – 21
3.3.4 *Telemetry* 3 – 34
3.3.5 *Distribution System* 3 – 34
3.3.6 *Hydraulic Capacity Analysis* 3 – 46

3.4 System Deficiencies and Recommendations 3 – 53
3.4.1 *Source of Supply* 3 – 53
3.4.2 *Water Treatment* 3 – 55
3.4.3 *Storage* 3 – 55
3.4.4 *Telemetry* 3 – 56
3.4.5 *Distribution System* 3 – 57

3.5 Proposed Improvement Projects 3 – 59

CHAPTER 4 CONSERVATION PROGRAM, WATER RIGHTS ANALYSIS, SYSTEM RELIABILITY AND INTERTIES **Page**

4.1 Water Use Efficiency Program 4 – 2
4.1.1 *Historical City of Blaine Conservation Program* 4 – 3
4.1.2 *Current Conservation Measures* 4 – 3
4.1.3 *Estimated Savings Achieved by Historical Program* 4 – 6
4.1.4 *Water Conservation Goal* 4 – 6
4.1.5 *2008 – 2013 Water Conservation Measure* 4 – 7
4.1.6 *Customer Education* 4 – 9
4.1.7 *Projected Water Savings* 4 – 9
4.1.8 *Evaluations/Performance Reporting* 4 – 10
4.1.9 *Measurable Outcome* 4 – 10
4.1.10 *Goal Achievement Timeline* 4 – 10
4.1.11 *Distribution Leak Standard* 4 – 11
4.1.12 *Evaluation of Rate Structure* 4 – 11
4.1.13 *Evaluation of Reclaimed Water* 4 – 12
4.1.14 *Water Supply Characteristics* 4 – 12

4.2 Source of Supply Analysis 4 – 13
4.2.1 *Enhanced Conservation Measures* 4 – 13
4.2.2 *Water Right Changes* 4 – 13
4.2.3 *Interties* 4 – 13
4.2.4 *Artificial Recharge* 4 – 14
4.2.5 *Use of Reclaimed Water, Reuse, and other Non-Potable Sources* 4 – 14
4.2.6 *Treatment* 4 – 15

4.3 Water Right Evaluation 4 – 15
4.3.1 *Existing Water Rights* 4 – 15
4.3.2 *Current Water Usage and Projected Needs* 4 – 16

4.4 Water Supply Reliability Analysis 4 – 21
4.4.1 *Source Reliability* 4 – 21
4.4.2 *Water Right Adequacy* 4 – 21
4.4.3 *Water Shortage Response Planning* 4 – 22
4.4.4 *Well Monitoring Program* 4 – 22

4.5 Interties 4 – 22
4.5.1 *Birch Bay Water & Sewer District* 4 – 22
4.5.2 *Bell Bay Jackson Water Association* 4 – 23
4.5.3 *Proposed Interties* 4 – 23

4.6 Identification of System Improvements 4 – 24

CHAPTER 5 SOURCE PROTECTION **Page**

5.1 Wellhead Protection Program 5 – 1
5.1.1 *Overview* 5 – 1
5.1.2 *Completed Susceptibility Assessment* 5 – 1
5.1.3 *Delineated Wellhead Protection Area* 5 – 1
5.1.4 *Inventory of Potential Sources of Contamination* 5 – 4
5.1.5 *Notification of Findings* 5 – 5
5.1.6 Contingency Plans 5 – 5
5.1.7 *Spill / Incident Response Measure* 5 – 6

5.2 Recommended Improvements 5 – 6

CHAPTER 6 OPERATION AND MAINTENANCE PROGRAM **Page**

6.1 Water System Management & Personnel 6 – 1
6.2 Operator Certification 6 – 1
6.3 System Operation and Control 6 – 2
6.3.1 *Major System Components & Operations* 6 – 2
6.3.2 *Preventative Maintenance Program* 6 – 4
6.3.3 *Equipment and Supplies* 6 – 6

6.4 Comprehensive Monitoring Plan 6 – 6

6.5 Emergency Response Plan 6 – 9
6.5.1 *Water System Personnel Emergency Call-up List* 6 – 10
6.5.2 *Notification Process* 6 – 11
6.5.3 Vulnerability Analysis 6 – 11
6.5.4 Contingency Operation Plan 6 – 11

6.6 Safety Procedures 6 – 12
6.7 Cross-Connection Control Program 6 – 12
6.8 Customer Complaints Response Program 6 – 13
6.9 Records Keeping/Reporting 6 – 13
6.10 Recommended O&M improvements 6 – 14

CHAPTER 7 DESIGN AND CONSTRUCTION STANDARDS **Page**

7.1 Project Review Procedures 7 – 1
7.2 Policies and Requirements for Outside Parties 7 – 1
7.3 Design Standards 7 – 1
7.3.1 *General Standards* 7 – 2
7.3.2 *Construction Drawings and Specifications* 7 – 2
7.3.3 *Plan Review* 7 – 3
7.3.4 *Permits* 7 – 3
7.3.5 *Utility Locations* 7 – 4
7.3.6 *Easements* 7 – 4
7.3.7 *Pressure* 7 – 4
7.3.8 *Velocities* 7 – 5

7.3.9 *Pipe Size and Layout* 7 – 5
7.3.10 *Domestic Water Service* 7 – 5

7.4 Construction Standards 7 – 6
7.5 Construction Certification and Follow-Up Procedures 7 – 6

CHAPTER 8 IMPROVEMENT PROGRAM Page

8.1 Prioritizing Projects 8 – 1
8.2 Identification of System Improvements and Assessment of Alternatives 8 – 1
8.2.1 Source of Supply 8 – 1
8.2.2 Water Treatment 8 – 2
8.2.3 Storage 8 – 2
8.2.4 Telemetry Systems 8 – 4
8.2.5 Distribution/Transmission System 8 – 4
8.2.6 Hydraulic Modeling – System Pressure and Fire Flow 8 – 4
8.2.7 Booster Pump Station 8 – 5

8.3 Selection of Alternatives 8 – 6
8.4 Capital Improvement Plan and Schedule 8 – 6
8.5 Improvement Project Funding 8 – 7

CHAPTER 9 FINANCIAL PROGRAM Page

9.1 Past and Present Financial Status 9 – 1
9.2 Available Revenue Sources 9 – 2
9.2.1 Developer Financing 9 – 3
9.2.2 Combination Financing by the City and Developers 9 – 3
9.2.3 Revenue Bonds 9 – 3
9.2.4 Grant/Loan Funds 9 – 4

9.3 Allocation of Revenue Sources 9 – 4
9.4 Program Justification 9 – 4
9.5 Assessment of Rates 9 – 4

CHAPTER 10 MISCELLANEOUS DOCUMENTS Page

10.1 State Environmental Policy Act (SEPA) 10 – 1
10.2 Other Documents 10 – 1
10.3 References 10 – 1

TABLES

		Page No.
Table 1	Historical Water Use-Average Day Demand	ES-2
Table 2	Forecast Water Demands, without Conservation	ES-2
Table 3	Forecast Water Demands, with Conservation	ES-2
Table 4	Capital Projects	ES-5
Table 5	Scheduled Planning Projects	ES-9
Table 1.1	Review Comments	1 – 11
Table 2.1	Water Use Data Collection Requirements	2 – 4
Table 2.2	Total Service Connections and Equivalent ERUs (December)	2 – 7
Table 2.3	Projected Population within City of Blaine's Water Service Area	2 – 11
Table 2.4	Projected use within Blaine Service Area Compared to Resale Use	2 – 12
Table 2.5	Annual Water Loss	2 – 13
Table 2.6	Projected ERU Growth Rate by Customer Class	2 – 14
Table 2.7	Historical Water Demands by Customer Class	2 – 16
Table 2.8	Projected Annual Water Demands 2008-2014 (Without Conservation)	2 – 17
Table 2.9	Projected Water Demands 2009-2029 (Without Conservation)	2 – 18
Table 2.10	Projected Annual Water Demands 2009-2014 (With Conservation goal of 1% Reduction in Peak Season Demand from 2009 - 2014)	2 – 19
Table 3.1	Historical Annual Well Withdrawal	3 – 5
Table 3.2	Water Demand Factors and Projections 2008-2029	3 – 7
Table 3.3	Well Information	3 – 14
Table 3.4	Existing Reservoir Data	3 – 24
Table 3.5	Storage Capacity Analysis Required Storage Volumes Considering City Resources as a Whole (gallons)	3 – 27
Table 3.6	Storage Capacity Analysis Required Storage Volumes Considering Independent Pressure Zones and No Additional Wells (gallons)	3 – 32
Table 3.7	Storage Capacity Analysis Required Storage Volumes Considering Independent Pressure Zones With Additional Wells and Corresponding Reduction in Operation Storage Volume (gallons)	3 – 33
Table 3.8	Summary of 171 Pressure Zone	3 – 36
Table 3.9	Summary of 320 Pressure Zone	3 – 37
Table 3.10	Summary of 440 Pressure Zone	3 – 38

Table 3.11	Summary of 330 Pressure Zone	3 – 39
Table 3.12	Summary of 360 Pressure Zone	3 – 40
Table 3.13	Pressure Regulating Valves	3 – 43
Table 3.14	Existing Pump Station Data	3 – 46
Table 3.15	Capital Projects	3 – 60
Table 3.16	Scheduled Planning Projects	3 – 64
Table 4.1	WUE Requirements and Deadlines	4 – 2
Table 4.2	Inverted Block Conservation Pricing for ¾ Service Meter	4 – 4
Table 4.3	2008-2013 Conservation Program Conservation Measures	4 – 7
Table 4.4	Projected Annual Water Consumption 2008-2013	4 – 9
Table 4.5	Projected Peak Season Water Consumption 2009-2014	4 – 10
Table 4.6	Annual Water Losses	4 – 11
Table 4.7	Wells and Water Rights	4 – 17
Table 4.8	Existing Water Rights	4 – 19
Table 4.9	Future Water Rights	4 – 20
Table 5.1	Zone of Contribution Time of Travel	5 – 4
Table 6.1	State and Federal Water Quality Testing Requirements	6 – 7
Table 6.2	Emergency Contract Information	6 – 10
Table 8.1	Capital Projects	8 – 8
Table 8.2	Scheduled Planning Projects	8 – 12
Table 8.3	10-year Water Capital Improvement Projects	8 – 13
Table 9.1	History of Operating Budget	9 – 1

Page No.

FIGURES

Figure 1.1	City of Blaine and Neighboring Purveyors	1 – 2
Figure 1.2	Water Service Area	1 – 5
Figure 1.3	Water System Transmission Mains and Pressure Zones	1 – 8
Figure 2.1	Land Use	2 – 9
Figure 2.2	Future Land Use	2 – 10
Figure 3.1	Water System Pressure Zone and Major Facilities	3 – 16
Figure 3.2	Existing Water System	3 – 17
Figure 3.3	Water System Schematic Existing System	3 – 44
Figure 3.4	Low Fire Flow Areas	3 – 54
Figure 5.1	Recommended Wellhead Protection Areas	5 – 3
Figure 8.1a	CIP Projects Map	8 – 14
Figure 8.1b	CIP Projects Map	8 – 15

VOLUME 2

APPENDICES

Appendix A	Water Facilities Inventory/Operation Permit
Appendix B	Agreements
Appendix C	Water Service Outside City Limits Policy
Appendix D	2009 Rate Structure and Fees
Appendix E	2008 Consumer Confidence Report
Appendix F	Well/Water Rights Information Ground Water Susceptibility Assessment Survey Forms
Appendix G	Chapter 3 - *Water Systems, East Blaine Subarea Infrastructure Plan for Streets, Water, Sewer and Stormwater (Draft)*
Appendix H	Storage Volume Calculations
Appendix I	Hydraulic Modeling Data
Appendix J	Water Supply Emergency Response Action Plan/Water System ERP
Appendix K	Coliform Monitoring Plan
Appendix L	Cross-Connection Control Program
Appendix M	Water System Design Standards, Construction Specifications and Standard Details
Appendix N	Review Comments

City of Blaine

Comprehensive Water System Plan

EXECUTIVE SUMMARY

INTRODUCTION

This *Comprehensive Water System Plan Update* for the City of Blaine (City) brings together information regarding the existing water system and future projections into an organized document. This document will be used for the planning and prioritization of improvements within the City's water service area. This plan has been prepared in accordance with the requirements of the Washington Administrative Code (WAC) 246-290-100, as revised pursuant to the 2003 "Municipal Water Law", the April 1997 Washington Department of Health (DOH) *Water System Planning Handbook*, and the June 1999 DOH *Water System Design Manual,* and in the context of the February 2000 Whatcom *County Coordinated Water System Plan* (*CWSP*).

The City's water system (DOH System ID No. 07300U) is a public system dedicated to providing water to residential and commercial customers both within the City's boundaries and within unincorporated areas of Whatcom County. The City's water system has operated since the 1920s and encompasses a combination of rural and urban areas. Historically, customers have been full-time, part-time summer and commercial in nature. The City's retail water service area includes approximately 8,700 acres.

EXISTING SYSTEM

The City's water sources include ten production wells and two additional City-owned wells that were drilled in 1991 (one that is for groundwater monitoring and one that is in the design phase for a full-time production well). One new well was drilled in 2007. This well will be placed in service following design, DOH source approval and Department of Ecology (DOE) water rights approval.

The ten production wells supply water to five storage reservoirs, then from the reservoirs to the service area through the network of transmission and distribution mains. As of December 2006, there were 2,465 connections or 8,754 equivalent residential units (ERUs). Within the water system there also are five booster pump stations and interties with two adjacent purveyors: Birch Bay Water and Sewer District and Bell Bay Jackson Water Association.

The current water service area is generally from the U.S./Canada border on the north to the resort community of Birch Bay along the south and west of Interstate 5 (see Figure 1.2). Land use within the service area is shown on Figure 2.1.

Annual water usage (as Average Day Demand or ADD, in million gallons per day, mgd) from 1999 to 2006 is shown in Table 1. An equivalent residential unit (ERU) represents the amount of water consumed by a typical city single-family residence. The average water usage for a single-family residence was determined to be 190 gallons per day for the City's system. The ratio of Maximum Day Demand (MDD) to ADD is 2.0. The ratio of peak hour demand (PHD) to MDD is approximately 1.55.

Table 1. Historical Water Use - Average Day Demand (mgd)

1999	2000	2001	2002	2003	2004	2005	2006
1.251	1.318	1.271	1.366	1.465	1.535	1.594	1.653

FUTURE WATER DEMAND AND WATER CONSERVATION

Future water demands for the District were estimated by forecasting growth in customer classes. Water demands were calculated by estimating the number of future connections then multiplying that number by the water demand per ERU. Water demands were calculated for each customer type then combined for a total system demand. Residential population was forecast to increase at a rate of 4.0% for single-family residences, 3.0% for multi-family residences, and 1.0% for senior/disabled. The historical and projected annual distribution system leakage is 8.0% of the annual volume of water supply.

The projected total ADD and MDD are as indicated in Table 2 (without conservation impacts) and Table 3 (with conservation).

Table 2. Forecast Water Demands, without Conservation (mgd)

	2008	2009	2010	2011	2012	2013	2014	2019	2024	2029
ADD	1.90	1.95	2.01	2.06	2.13	2.19	2.27	2.67	3.14	3.67
MDD	3.80	3.90	4.01	4.13	4.25	4.38	4.54	5.34	6.28	7.34

Table 3. Forecast Water Demands, with Conservation, (mgd)

	2008	2009	2010	2011	2012	2013	2014
ADD	1.90	1.95	2.00	2.06	2.12	2.18	2.26
MDD	3.80	3.90	4.01	4.12	4.24	4.37	4.52

The City has had a conservation program in place since 1991, with efforts significantly increasing in 1998.

The Water Use Efficiency (WUE) Program has been prepared accordance with the recently enacted Municipal Water Law and DOH rules (WAC 246-290-800). The WUE Program identifies goals and measures for enhanced water conservation. The goals of the current conservation program at the City are:

- Reduce peak consumption (MDD) by 5 percent
- Reduce annual consumption by 2 percent

SYSTEM ANALYSIS AND CAPITAL IMPROVEMENT PROGRAM

The City's system-wide demand for ADD will be met under current source capacity through 2029. However, the current source capacity does not meet the system-wide MDD and equalizing storage is required. Once two additional wells described in the source capacity analysis are brought on-line and applicable water rights are obtained, the City's total pumping capacity will meet MDD through 2020.

The current water rights for the City are shown in Table 3.4. From this, the City currently has water rights to an instantaneous withdrawal of 2,970 gpm. The City has several water rights applications on file, dating back to 1991. In cooperation with Birch Bay Water and Sewer District, the City is pursuing DOE review and approval of three of its applications and one District application through the DOE cost reimbursement program. This process should be complete in 2010.

The City performs all water quality monitoring of the water supply, storage and distribution system. Currently the City operates a gas chlorine disinfection system to chlorinate the source water. City staff has indicated the system appears to be close to capacity during peak days.

The City operates five storage reservoirs located throughout the water service area. Four of the reservoirs are standpipes and one is a buried concrete tank with exposed dome roof. The condition and configuration of the existing reservoirs was reviewed and some deficiencies were noted. Capital projects to address these deficiencies have been developed.

The City's existing telemetry systems are essentially simple pump-call systems and reservoir level monitoring systems. In addition to pump-call systems, the City has various telemetry systems which respond to low/high level alarms, communication failures and pump failures.

The City's distribution system is made of five pressure zones extending from the western portion of the Semiahmoo Spit area to the eastern boundary of the City's service area. A sixth zone is proposed to serve development in the northeast corner of the City.

The major transmission of water from the City's well field to the core distribution system is via two transmission mains – a 16-inch in Pipeline Road and a parallel 12-inch in Sweet Road. An additional transmission main is the City's 14-inch pipeline that travels under Drayton Harbor to the Semiahmoo Spit. The major transmission mains are within the 171 pressure zone, therefore the City has five booster pump stations that provide service to customers located in higher pressure zones.

The City has established certain standards for extension of water mains within the water service area. The standard forms and requirements can be found in the City's *Development Guidelines and Public Works Standards* document. These standards are

updated periodically, with the last revision in 1997. A portion of the City's design standards and construction specifications related to the water system are contained in Appendix M.

By reference, the *Development Guidelines and Public Works Standards,* in its entirety, is incorporated in this plan. Current copies of the *Development Guidelines and Public Works Standards* are available for review at the City's Public Works office or on-line on the City's web page.

The storage and transmission and distribution system was analyzed to determine its ability to provide for existing and forecast water demand, while providing appropriate service pressure to all customers.

The City's existing model was created by an unknown party and passed along to the City upon a change in engineering consultants. The model was revised to include missing components of the piping network and refined to reflect a more current distribution of demand. The model analyzed the current and forecast demands for ADD, MDD, and PHD for the years 2007 through 2013, 2107, 2022, and 2027. Fire flow requirements were set to 1,000 gpm at each node with a minimum system pressure of 20 psi.

The analysis revealed deficiencies in the source capacity, water treatment, storage, telemetry, and the distribution system. A capital improvement plan was developed to address these deficiencies (See following Tables 4 and 5). Those system deficiencies are summarized in Section 3.4 and proposed improvements are discussed in Section 3.5 and Chapter 8.

Table 4
City of Blaine
CAPITAL PROJECTS

ID	Capital Improvement	Project Description	Page Where Need Identified	Estimated Project Cost (2009)	Recommended Year of Completion
I. SUPPLY / TREATMENT					
SU-1	New Source	Water Rights and Water Supply (hydrogeological studies, well drilling, applications, cost reimbursement program, etc., joint with BBWSD)	3-20, 3-55	$ 300,000	2010-2012
SU-2	Well Field Pressure Zone Study & Improvements	Review of alternatives and project implementation to create higher pressure zone in well field for local service and to eliminate Well #6. Results possibly affect projects SU-3 and T/D-2.	3-51, 3-59	$ 120,000	2010
SU-3	New Source	Connection of Well #9 to 440 pressure zone. Includes review of well condition/performance. Add 440 to 171 zone connection in Lincoln Park, with PRV.	3-20, 3-55	$ 306,000	2010
SU-4	Replacement of Chlorination Treatment System	Replacement of chlorination building and chlorination equipment including engineering evaluation of treatment alternatives and facility location. Additional item includes generator for powering one well.	3-24, 3-56	$ 251,000	2010
SU-5	Booster Station w/ Back-up Power	Based on results of Project SU-2, City will determine if this project is necessary.	3-51, 3-59	$ 371,000	2011
SU-6	New Source	Upgrade of Well 5.1, including capacity increase, VFD power and telemetry connection.	3-20, 3-56	$ 125,000	2011
SU-7	New Source	Completion of Well #8.1 including pump selection and connection to system	3-20, 3-55	$ 261,000	2011
SU-8	Telemetry System	Telemetry system upgrades including telemetry system for Well #9 tying operation of Well #9, BPS #3 and RES #5	3-36, 3-58	$ 60,000	2011
SU-9	Source	Rehabilitation or reconstruction of Well #2 and possibly other wells within the well field	3-14, 3-55	$ 50,000	2013
		Subtotal for Supply Projects		**$ 1,844,000**	

Table 4
City of Blaine
CAPITAL PROJECTS, *continued*

ID	Capital Improvement	Project Description	Page Where Need Identified	Estimated Project Cost (2009)	Recommended Year of Completion
II. STORAGE					
ST-1	Reservoir Upgrade	Reservoir #5 Circulation Improvements	3-27	$ 35,000	2010
ST-2	Reservoir	Construction of East Blaine (630-zone) storage reservoir. Completion in conjunction with/or after completion of 630-zone BPS (BPS-1). Project driven by development of East Blaine.	3-33, 3-58	$ 2,510,000	2011
ST-3	Reservoir Upgrade	Reservoir #4 Circulation Improvements	3-27	$ 35,000	2011
ST-4	Reservoir Upgrade	Reservoir #3 Circulation Improvements	3-27	$ 35,000	2012
ST-5	Reservoir Upgrade	Reservoir #2 Drain Line modification (with future road project)	3-25, 3-56	$ 50,000	2013
ST-6	Reservoir	Construction of additional 330-zone storage reservoir.	3-31, 3-58	$ 5,622,000	2014
ST-7	Reservoir Upgrade	Replacement of Reservoir #1 (See Project SU-2).	3-51, 3-56	$ 4,518,000	2015
		Subtotal for Storage Projects		**$ 12,805,000**	
III. TRANSMISSION/DISTRIBUTION					
T/D-1	Harvey Road to Pipeline Road Main Extension	Extension of existing water line (approx. 1,400 ft.) along Harvey Rd. south of H St. to intersection of Pipeline Rd.	3-52, 3-59	$ 251,000	2010
T/D-2	Pipeline Road Main Extension	Extension of main from intersection of Harvey Road and Pipeline Road continuing east along Pipeline Rd. to entrance of City's well field area.	3-52, 3-59	$ 311,000	2010
T/D-3	9th Street Replacement	Replacement of approximately 400 linear feet of existing 6" main with 8" D.I. in conjunction with City's pavement replacement plan. Pipe replacement would extend from H Street to G Street.	3-59	$ 50,000	2010
T/D-4	B Street Replacement	Replacement of approximately 900 linear feet of existing 6" main with 8" D.I. in conjunction with City's pavement replacement plan. Pipe replacement would extend from 2nd Street to 5th Street.	3-59	$ 110,000	2010
T/D-5	4th Street Replacement	Replacement of approximately 800 linear feet of existing 6" main with 8" D.I. Replacement of approximately 100 linear feet of existing 8" main, all in conjunction with City's pavement replacement plan. Pipe replacement would extend from D Street to A Street. Add PRV at A Street.	3-59	$ 115,000	2010
T/D-6	Cathodic Protection	Cathodic protection for harbor crossing	3-43, 3-59	$ 50,000	2011

Table 4
City of Blaine
CAPITAL PROJECTS, *continued*

ID	Capital Improvement	Project Description	Page Where Need Identified	Estimated Project Cost (2009)	Recommended Year of Completion
T/D-7	Bell Road/Hughes Avenue Replacement	Replacement of transmission main from Portal Way north to Hughes Ave., then east to east side of Interstate 5.	3-53, 3-60	$ 841,000	2011
T/D-8	Sweet Road Upsizing - Phase 1	Upsize main along Sweet Rd. from termination of Project T/D-3 east (approx. 3,867 ft.) toward well field.	3-54, 3-60	$ 1,255,000	2013
T/D-9	Sweet Road Upsizing - Phase 2	Upsize main along Sweet Rd. from termination of Project T/D-5 east (approx. 3,867 ft.) toward well field.	3-54, 3-60	$ 1,255,000	2015
T/D-10	Sweet Road Upsizing - Phase 3	Upsize main along Sweet Rd. from termination of Project T/D-6 east and north (approx. 3,866 ft.) to well field.	3-54, 3-60	$ 1,255,000	2017
T/D-11	E Street Replacement	Replacement of approximately 400 linear feet of existing 6" main with 8" D.I. Replacement of approximately 800 linear feet of existing 8" main, all in conjunction with City's pavement replacement plan. Pipe replacement would extend from 6th Street to 12th Street.	3-59	$ 146,000	2016-2030 (w/ Road Work)
T/D-12	Cedar Street Replacement	Replacement of approximately 1,500 linear feet of existing 4" main, 400 linear feet of existing 6" main, and 200 linear feet of existing 1" main with 8" D.I., all in conjunction with City's pavement replacement plan. Pipe replacement would extend from Peace Portal Drive to Mitchell Avenue.	3-59	$ 251,000	2016-2030 (w/ Road Work)
T/D-13	11th Street Replacement	Replacement of approximately 2,200 linear of existing 6" main with 8" D.I. Replacement of approximately 300 linear feet of existing 8" main. Replacement of approximately 800 linear feet of existing 12" AC main with D.I., all in conjunction with City's pavement replacement plan. Pipe replacement would extend from H Street to B Street.	3-59	$ 412,000	2016-2030 (w/ Road Work)
		Subtotal for Transmission/Distribution Projects		**$ 6,302,000**	

Table 4
City of Blaine
CAPITAL PROJECTS *continued*

ID	Capital Improvement	Project Description	Page Where Need Identified	Estimated Project Cost (2009)	Recommended Year of Completion
IV. BOOSTER PUMP STATIONS					
BPS-1	Booster Station	Construction of 630-zone BPS	3-33, 3-61	$ 1,205,000	2010
BPS-2	Booster Station Upgrade	Addition of standby power generator at Lincoln Park for BPS #2 and #5	3-47, 3-61	$ 115,000	2011
		Subtotal for Booster Pump Station Projects		**$ 1,320,000**	

CIP Grand Total **$ 22,271,000**

Table 5
City of Blaine
SCHEDULED PLANNING PROJECTS

ID	Document Type	Project Description	Page Where Need Identified	Estimated Project Cost (2009)	Recommended Year of Completion
V. PLANNING/OTHER					
P-1	Other	Update Hydraulic Model	3-60	$ 15,000	2010
P-2	DOH Required Plan	Well Monitoring Program as required by DOH	4-19, 4-20	$ 10,000	2010
P-3	DOH Required Plan	Completion/update of Wellhead Protection Program	5-6	$ 20,000	2011
P-4	DOH Required Plan	Comprehensive Plan Update	N/A	$ 100,000	2014
		Total for Scheduled Planning Efforts		**$ 145,000**	

OPERATION AND MAINTENANCE

The City's water system is governed by the City Council; however the day-to-day operations are carried out under the supervision of the City's Operations Supervisor. The Operations Supervisor must have a Water Distribution Manager Level 2 certification or higher per WAC 246-292-050. The City's Operations Supervisor also coordinates operation of the water system with DOH.

The City of Blaine's water system consists of a fully metered distribution system, ten production wells, one water treatment system, five storage reservoirs, and five booster pump stations. The water system operates automatically with the exception of the production wells. The Operations Supervisor and staff monitor system operations, investigate unusual operating conditions, collect source production data, monitor booster pump stations and reservoirs, complete distribution system maintenance, test water quality, respond to customer calls regarding water quality, quantity, and leaks, respond to alarms from telemetry and autodialers, participate in annual training, and conduct conservation program activities.

The City has a preventative maintenance program, equipment and supplies for operating and maintaining the water system, a comprehensive monitoring plan, emergency response plan, safety procedures, cross-connection control program, customer complaint response program, and record keeping and reporting per WAC 246-290-480 regulations. These programs are discussed in detail within Chapter 6.

FINANCIAL PLAN

The City has operated its water system since it was first constructed in the 1920s. The City is responsible for managing its own financing, investment and accounting functions for the water system as well as other departments. The City finances improvements through the use of developer financing, combination financing by the City and developers, revenue bonds, and grant/loan funds.

The City should continue to update the water rate model each year with new projects and activities in order to confidently determine growth and revenue forecasts that adequately support the revenue requirements of the City. Water rates should also be reviewed annually to determine if a rate increase will need to be assessed to account for the revenue needs.

CHAPTER 1

DESCRIPTION OF WATER SYSTEM

1.1 OWNERSHIP AND MANAGEMENT

The City of Blaine (City) operates a municipal Group A Water System located in northwestern Whatcom County. The City's water system is a public system dedicated to providing water to residential and commercial customers both within the City's boundaries and within unincorporated areas of Whatcom County. The system is regulated by the Washington State Department of Health (DOH) and is formally identified as:

City of Blaine Water System
System ID No. 07300U

A copy of the current Water Facilities Inventory (WFI) Report is included in Appendix A.

The operation of the water system is under the control of the Public Works Director who reports directly to the City Manager. There are seven City Council members who oversee the operation of the City and each member resides within the City's water service area.

1.2 AUTHORIZATION

Recognizing the need to establish a uniform process to identify present and future water system needs and to set forth a means for meeting those needs in an efficient manner, the City Council has authorized CHS Engineers to proceed with the studies required to prepare this updated Comprehensive Water System Plan (CWSP).

This plan brings together information regarding the existing water system and future projections into an organized document. This document will be used for the planning and prioritization of improvements within the City's water service area.

1.3 SYSTEM BACKGROUND AND CHARACTERISTICS

1.3.1 Historical Water System Development

The City is located in the northwestern part of the state of Washington immediately south of the Canadian border. See Figure 1.1. The City limits

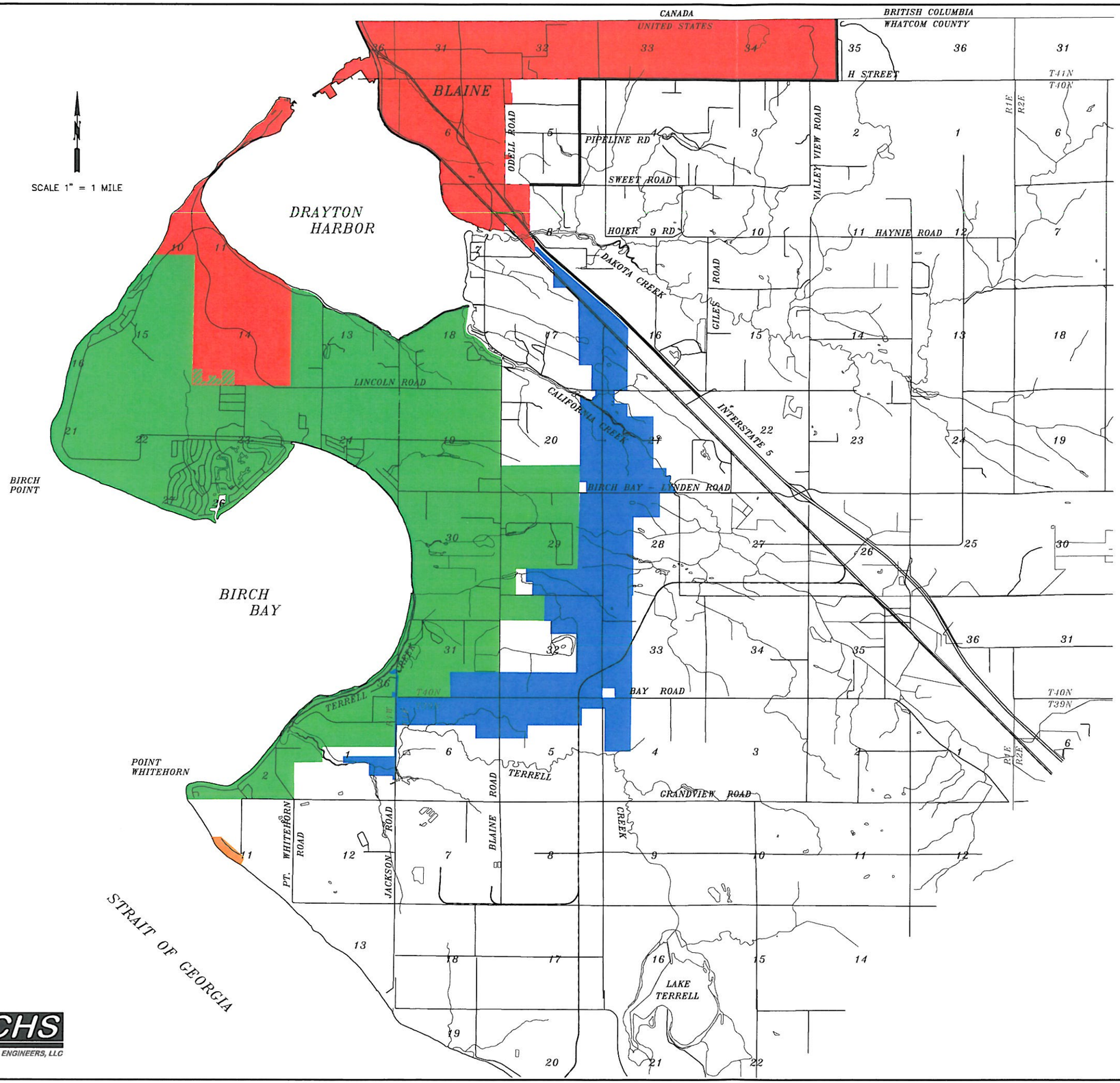

LEGEND

- CITY OF BLAINE - CITY LIMITS
- BIRCH BAY WATER AND SEWER DISTRICT - CORPORATE BOUNDARY
- BELL-BAY JACKSON WATER ASSOCIATION - SERVICE AREA
- GRANDVIEW BEACH WATER ASSOCIATION - SERVICE AREA
- UGA BOUNDARY

CHS ENGINEERS, LLC

CITY OF BLAINE
COMPREHENSIVE WATER SYSTEM PLAN

FIGURE 1.1

CITY OF BLAINE AND NEIGHBORING PURVEYORS

NOVEMBER 2009

270606\BLAINE-FIG-1.1 1=5280 11x17 11/29/09

encompass both the east and west sides of Drayton Harbor and Interstate 5 cuts through the city running northwest to southeast. On the west side of Drayton Harbor, the City's boundary includes the Semiahmoo Spit and a portion of Birch Point. To the east, the service area includes the core area of the City with small businesses and residential areas. To the north, the City abuts the Canadian border. The resort community of Birch Bay adjoins the City to the south and west of Interstate 5 and rural County land is to the east of Interstate 5.

The City's water system has operated since the 1920s and encompasses a combination of rural and urban areas. The service area includes a combination of full-time residents, part-time summer residents and commercial establishments. A schematic of the City's water system and the existing water service area boundary are illustrated on Figure 1.2.

In November 1992, the City of Blaine acquired the former Sweet Road Water Association's infrastructure by an interlocal agreement. The Agreement summarizes the responsibility of the City to provide all service to former Association members the same as the City provides to all other water utility customers of the City living outside of the City limits, as well as the Association members' responsibility as water utility customers of the City. A copy of the Agreement is included in Appendix B.

1.3.2 Topography

The City's current water service area encompasses approximately 9,900 acres of land. The topography of the surrounding area can be characterized as gently rolling terrain. The main water supply is a well field, which lies at an elevation of approximately 175 feet and is located about two and a half miles southeast of the downtown area. Most of the western portion of the City lies below an elevation of 100 feet and slopes gradually down toward Drayton Harbor.

On the west side of the harbor, the terrain varies from sea level along the Semiahmoo Spit up to an elevation of 268 feet at the high ground of Birch Point. The plateau on Birch Point supports a large residential area, which continues to expand.

1.3.3 Climate

The climate of Blaine is typical for northwestern Washington. Annual temperatures range between 32° Fahrenheit (F) and 70° F for the winter and summer months, respectively. Local precipitation is generally heavy in the winter, moderate in the fall and spring, and light in the summer. The average annual rainfall is approximately 40.6 inches, with winter averages of about 15.5 inches per year and summer averages of about 4.7 inches per year.

Climatic data used in this report was obtained from the Office of the Washington State Climatologist at the University of Washington in Seattle and the Western Regional Climate Center division of the Atmospheric Sciences Center of the

Desert Research Institute. The Institute maintains weather records from Weather Station #450729, which is located within the City.

1.3.4 Surface Waters

The City's water service area is generally located to the southwest and northeast of Drayton Harbor. The City provides water service to residences and businesses that are located adjacent to the shoreline and inland within the service area. Coastal flooding has not been a significant issue in the past; however, a geological event or a large storm event could raise the tidewaters of Drayton Harbor resulting in the flooding of a small portion of the service area.

1.3.5 Neighboring Purveyors

Private wells or small private water associations generally provide water service in the areas bordering the eastern part of the City. The closest water purveyors to the City are the Birch Bay Water and Sewer District (BBWSD) located generally southwest of the City, and the Bell Bay Jackson Water Association, which is east of the BBWSD and south of the City. Figure 1.1 illustrates the boundaries of these two purveyors.

1.3.6 Ordinances

The City Council initiates, reviews and formally adopts ordinances pertaining to the regulations and operations of the water system. The City ordinances and policies applicable to the water system can be found in the City of Blaine's Municipal Code (BMC).

1.4 INVENTORY OF EXISTING FACILITIES

The City's existing water system includes the following facilities and connections. These facilities along with schematics of the system are illustrated and described in more detail in Chapter 3.

1.4.1 Sources

The City's sources of supply are comprised of wells located mostly in the area east of the City. The City currently operates ten production wells, eight of which are located in the City's well field, and two of which are located within other areas of the City. Two additional City-owned wells were drilled in 1991 and are located east of the City along Boblett Road. One of these two wells is a groundwater-monitoring well and the other is in the design phase for use as a full-time production well. There is also one other new well that was drilled in 2007.

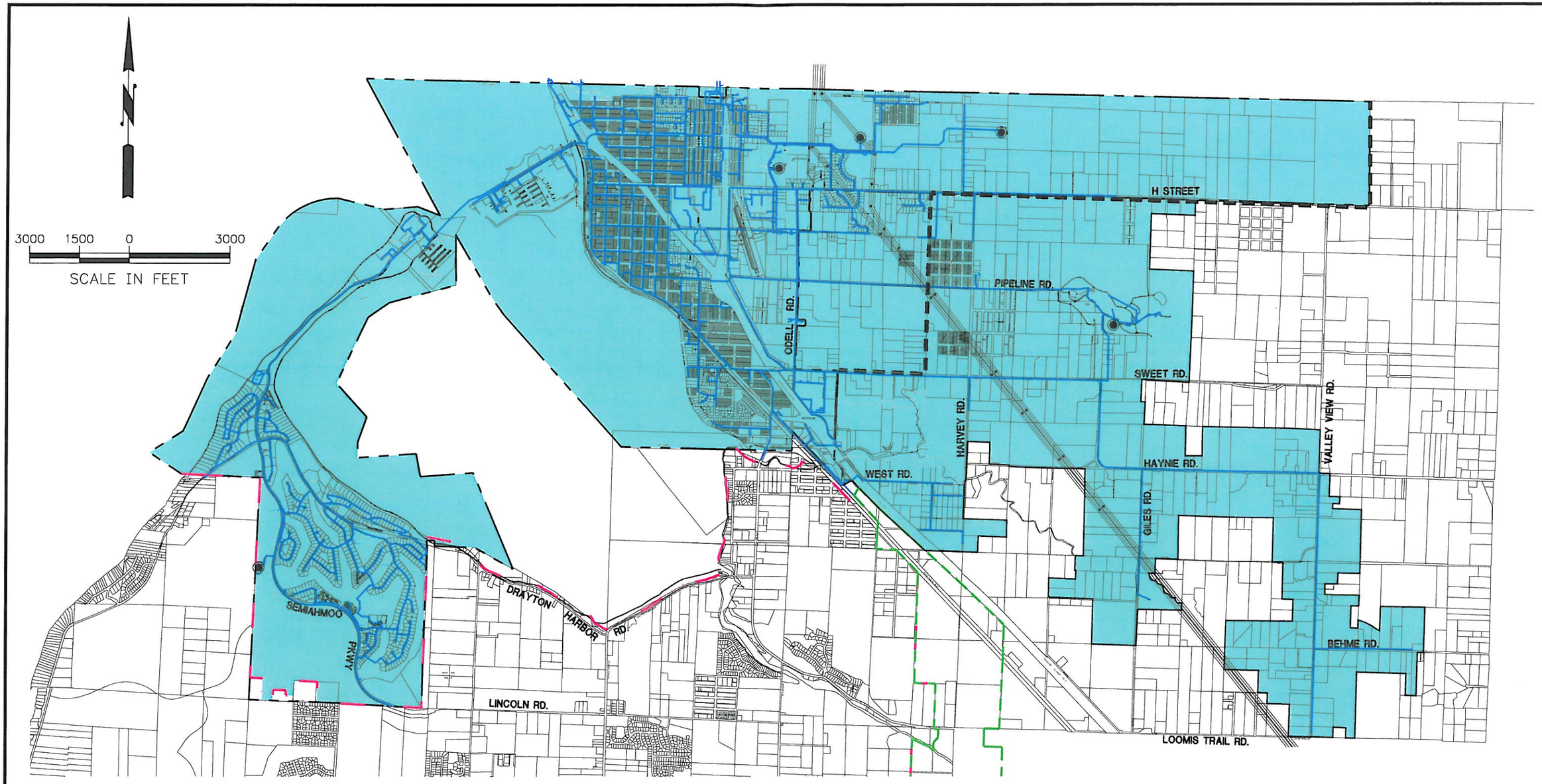

LEGEND

- RESERVOIR
- WATER MAINS
- CITY OF BLAINE WATER SERVICE AREA WITHIN CITY LIMITS
- CITY OF BLAINE WATER SERVICE AREA OUTSIDE CITY LIMITS
- URBAN GROWTH AREA BOUNDARY
- BIRCH BAY WATER AND SEWER DISTRICT SERVICE AREA BOUNDARY
- BELL–BAY JACKSON WATER DISTRICT BOUNDARY
- EXISTING/FUTURE WATER SERVICE AREA (ENCOMPASSING "RETAIL SERVICE AREA")

CHS
CHS ENGINEERS, LLC

CITY OF BLAINE
COMPREHENSIVE WATER SYSTEM PLAN

FIGURE 1.2

WATER SERVICE AREA

NOVEMBER 2009

270606\comp plan fig4.DWG 11x17 1=3000 11/30/09

Under normal operating conditions, the ten wells are used to supply the City's storage reservoirs. Water is then supplied by the reservoirs to the service area through a network of transmission and distribution mains. Further discussion in regard to the City's wells and their relationship to the reservoirs can be found in Section 3.3.1 of this plan.

1.4.2 Storage

The City operates and maintains five storage reservoirs within the service area. All the reservoirs have storage volumes equaling one million gallons or more except for a 102,000-gallon reservoir, which serves the 320 pressure zone.

Two storage reservoirs, one at the watershed (Reservoir #1) and one at Lincoln Park (Reservoir #4), are within the system's base 171 pressure zone.

The remaining three reservoirs provide storage in the upper pressure zones located along the southern and northern portions of the system. Reservoir #3 is located on Semiahmoo Parkway and serves West Blaine. Reservoir #2 is the 102,000-gallon reservoir, which serves the 320 pressure zone, and Reservoir #5, which is located off Harvey Road, serves the higher elevations within the northeastern portion of the system.

As described above, the City's wells supply these reservoirs that, in turn, supply the distribution system. Reservoir levels are generally maintained through liquid-level control systems that operate well pumps and by PRV stations that control pressures within the upper pressure zones.

A more thorough discussion of the reservoirs can be found in Section 3.3.1 of this plan.

1.4.3 Distribution System

The transmission of water from the watershed area to the distribution system is via two transmission lines. These lines are a 16-inch line in Pipeline Road and a parallel 12-inch line in Sweet Road. The 12-inch line in Sweet Road also feeds to the south and east providing flow to the former Sweet Road Water Association and rural areas south of the established Urban Growth Area (UGA).

The City operates five interconnected pressure zones including the 171-zone, 320-zone, 330-zone, 360-zone, and 440-zone. Each of the pressure zones is illustrated in Figure 1.3.

Service to customers within the 171-pressure zone is via a network of 12-inch and smaller water mains. Service to the other pressure zones is provided by booster pump stations which are ultimately supplied by the 171-zone.

The majority of the local distribution system is comprised of water mains ranging in size from 8-inch to 10-inch. Pipe materials consist of asbestos cement (AC), polyvinyl chloride (PVC) and ductile iron (DI).

1.4.4 Booster Pump Stations

The City has five booster pump stations that supply the storage facilities within the upper pressure zones. Booster Pump Station (BPS) #1 pumps from the 171-zone to the 320-zone. It consists of one pump rated at 225 gallons per minute (gpm) and is located at 12th Street and G Street. BPS #2 pumps from the 320-zone to the 440-zone. This station has two pumps rated to 250 gpm and is located on D Street. BPS #3, located on Semiahmoo Spit, pumps from the171-zone to the 330-zone with two pumps rated from 600 to 650 gpm; however, the current capacity is approximately 800 gpm with both pumps running. BPS #4R pumps from the 330-zone to the 360-zone and has five pumps: two rated at 65 gpm, two rated at 275 gpm and one at 1,100 gpm. BPS #5 pumps from the 171-zone to 320-zone with two pumps rated at 500 gpm. This station is located in Lincoln Park.

1.4.5 Connections

As of December 2006 there were approximately 1,977 single family, 69 multi-family, 91 senior/disabled, 323 other, and 5 wholesale service connections to the water system. In most cases, multi-family connections include multiple dwelling units fed from one connection. The "other" classification for service connections consists of different types of connections including: commercial, public authority, industrial, city, international, and fish processor classes. For planning purposes, these six classes were grouped together as they have similar trends in terms of historical usage.

1.4.6 Interties

The City has interties with the BBWSD and Bell Bay Jackson Water Association. The BBWSD interties are located on Semiahmoo Parkway (two), Blaine Road, Portal Way and Semiahmoo Drive and the Bell Bay Jackson intertie is located on Portal Way. See Appendix B for copies of all agreements with these two purveyors.

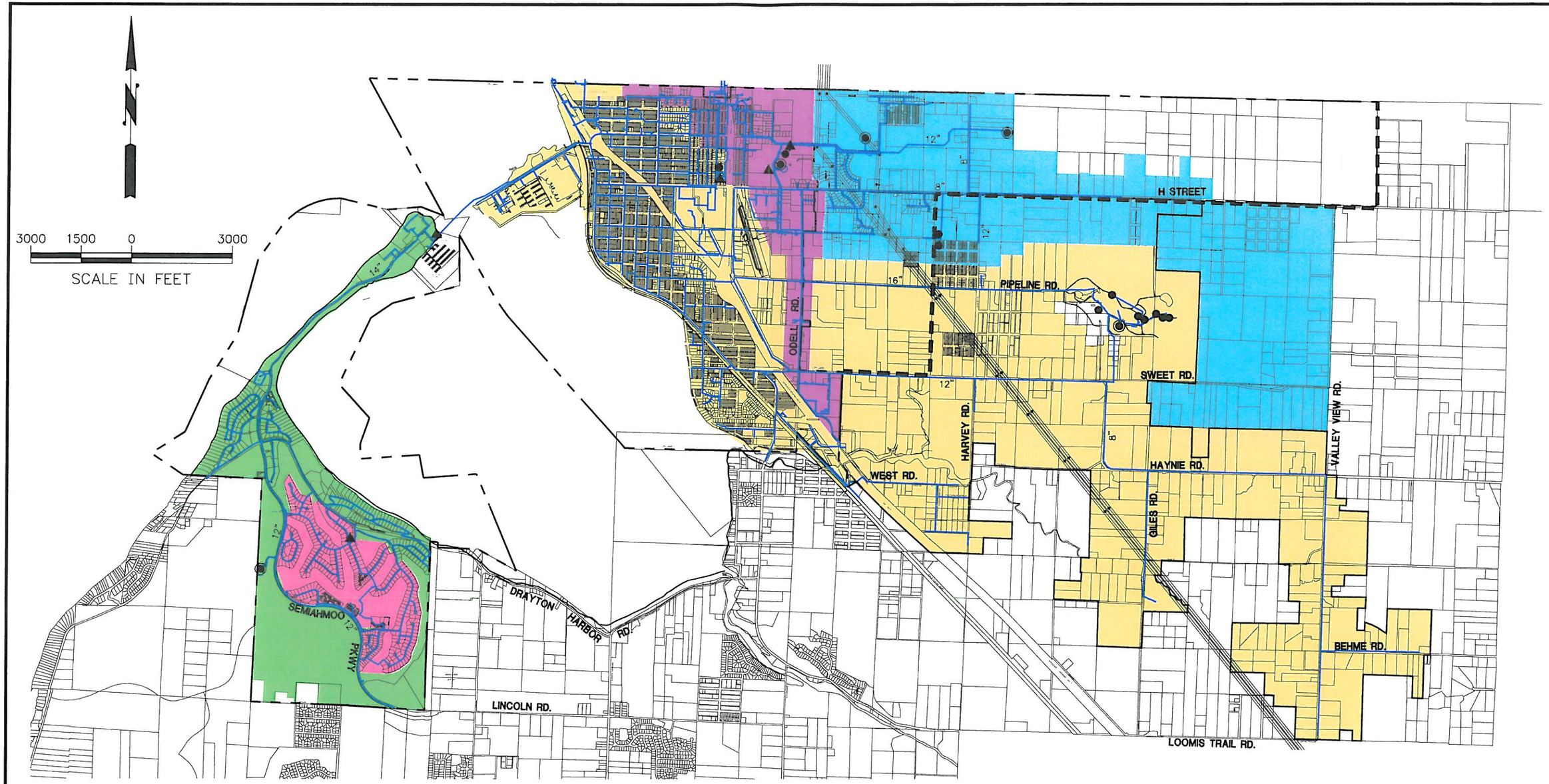

LEGEND

- RESERVOIR
- WELL
- PUMP STATION
- DISINFECTION SYSTEM
- WATER MAINS
- CITY OF BLAINE WATER SERVICE AREA WITHIN CITY LIMITS
- CITY OF BLAINE WATER SERVICE AREA OUTSIDE CITY LIMITS
- UGA BOUNDARY

- 171–ZONE
- 320–ZONE
- 330–ZONE
- 360–ZONE
- 440–ZONE

CHS
CHS ENGINEERS, LLC

270606\comp plan fig4.DWG 11x17 1=3000 11/30/09

CITY OF BLAINE
COMPREHENSIVE WATER SYSTEM PLAN

FIGURE 1.3

WATER SYSTEM TRANSMISSION MAINS AND PRESSURE ZONES

NOVEMBER 2009

1.5 RELATED PLANS

The following is a list of planning documents, with a brief summary of each, that have been reviewed in regard to impacts on the development of a Comprehensive Water System Plan for the City of Blaine.

A. 1989 Water System Plan Update, August 1989

This plan is an update to the City of Blaine Comprehensive Water System Plan dated July 1982. This plan addresses the changes in development of the Semiahmoo area, growth in Birch Bay, and the availability of water.

B. Blaine Ground Water Management Plan, June 1994

This plan was written to ensure the quantity and quality of groundwater within the City's Ground Water Management Area (GWMA) is maintained by understanding the hydrogeology of the GWMA and by identifying threats to the groundwater.

C. 1994 City of Blaine Water System Plan Final Draft, June 1994

This plan evaluates the City's water system and provides recommendations for addressing existing deficiencies, meeting future growth, and ensuring compliance with State and Federal regulations. It appears this plan was never finalized.

D. 1996 City of Blaine Water System Comprehensive Plan, Volume I of III, April 1996

This plan is an update to the City of Blaine Draft 1994 Comprehensive Water System Plan. This plan briefly evaluates the City's system and provides limited growth and demand projections. The plan makes recommendations in regard to Capital Improvement Projects and funding mechanism for these projects. The City never adopted this plan, nor did it receive final approval by DOH.

E. Whatcom County Coordinated Water System Plan Update, February 2000

This plan was written to address the public drinking water supply needs by the County and to coordinate between water service and the Growth Management Act.

F. **Whatcom County Comprehensive Plan,** June 2008, Amended November 2009

This plan provides information in regard to zoning and future land use within unincorporated Whatcom County.

G. **Birch Bay Comprehensive Water System Plan,** March 2009

This plan evaluates the BBWSD existing facilities, system operations and water quality. In addition, the plan provides the projected land use and the projected water demands of the BBWSD. The information in this plan is of particular importance to the City as the BBWSD is the largest wholesale customer that purchases water from the City. In addition, the BBWSD and the City continue to work closely together to evaluate the regional demands as the District currently relies on the City for all of its water.

1.6 COMMENTS FROM AGENCIES AND ADJACENT PURVEYORS

As part of the development of this plan, copies of this Comprehensive Water System Plan were sent to various local and State agencies for review. The chart on the following page lists the agencies that received plans for review and comment. Responses to comments are provided in Appendix N of this plan.

1.7 EXISTING SERVICE AREA AND CHARACTERISTICS

The City's existing water service area extends roughly from the U.S./Canada border on the north to the community of Birch Bay along the south and west of Interstate 5. To the east of Interstate 5 and east of the City is rural land within Whatcom County, which is not served by a local water purveyor. To the west, the service area boundary abuts the BBWSD and Drayton Harbor. The existing service area boundary, as illustrated in Figure 1.2, consists of approximately 5,400 acres within the City limits and an additional 4,500 acres outside the City limits.

1.8 FUTURE SERVICE AREA – "RETAIL SERVICE AREA"

The City's future service area coincides with the existing service area boundary. This boundary includes all land within the City limits except for a small number of properties included in the BBWSD water service area. In addition, the future service area includes parcels of land within the Blaine UGA. The future service area also includes rural parcels outside the City limits and the UGA which are either already served by the City or which front an existing City-owned water main. It should be noted there are a number of unserved rural parcels in the future service area that do not front an existing water main. These parcels have been included to prevent islands of unserved territory or irregular boundaries. The City's future service area boundary is delineated as the Existing/Future

Service Area as shown in Figure 1.2. This future service area boundary also encompasses the City's "Retail Service Area."

TABLE 1.1
City of Blaine
Review Comments

Organization	*Mailing Address*	*Comments YES*	*Comments NO*
Washington State Department of Health	Department of Health NW Drinking Water Operations 20435 72nd Ave S, Suite 200, K17-12 Kent, WA 98032-2358	Yes	
Whatcom County Dept. of Health	Whatcom County Health Department 509 Girard Street Bellingham, WA 98225		No
Whatcom County Planning and Development	Whatcom County Planning and Development Admin. 5280 Northwest Drive Bellingham, WA 98225	Yes	
Washington State Dept. of Ecology*	Washington State Department of Ecology P.O. Box 47600 Olympia, WA 98504-7600		No
Whatcom County Fire Marshal	Whatcom County Fire Marshal 5280 Northwest Drive Bellingham, WA 98226		No
Birch Bay Water & Sewer District	Birch Bay Water and Sewer District 7096 Point Whitehorn Road Birch Bay, WA 98230	Yes	
Bell Bay Jackson Water Association	Bell Bay Jackson Water Association 7232 W. 40th Drive, Ferndale, WA 98248		No
*Copies of the City's WSP were provided to DOH to be forwarded by DOH to DOE			

1.9 SERVICE AREA AGREEMENTS

The City has two wholesale customers: the BBWSD and Bell Bay Jackson Water Association. The BBWSD is the largest user within the Blaine system. Growth within BBWSD is anticipated to be similar to that of the City, while the Bell Bay Jackson Water Association is anticipated to have limited growth due to the rural nature of the system's service area.

1.10 SERVICE AREA POLICIES

The City has developed policies and service agreements used to guide the operation and maintenance, distribution of water, and capital improvements for the system. The City supplies quality water to residents and other retail customers throughout the service area. It also encourages programs for water conservation and reuse to assist in reducing the peak water demands during peak use months. The City supplies water to areas both inside and outside the City limits. The policies and requirements specific to the water service for both areas are addressed in the City's codes and ordinances, which are on file at the City.

The following is a brief summary of additional service area policies.

1.10.1 Wholesaling Water

The City currently wholesales water to BBWSD and Bell Bay Jackson Water Association. Copies of these supply agreements are on file at the City and have also been included in Appendix B.

1.10.2 Wheeling Water

The City does not wheel water from one purveyor to another.

1.10.3 Annexation

The City is bordered along the east and partially along the south by unincorporated areas, which are not served by other water purveyors. At this time, the City has no plans to annex any additional areas outside the City limits. Anyone outside the City limits who seeks connection to the City's water system must make a request to the City to obtain water from the City's system. The City has adopted a policy in regard to providing service outside the City. This policy is included in Appendix C.

1.10.4 Direct Connection and Satellite/Remote Systems

All new developments that are within the boundaries of the City's service area, and which request service from the City, must connect to the City's existing water system. There is no plan for any satellite water systems.

1.10.5 Design and Performance Standards

The City requires all water system designs to be prepared by a licensed professional engineer and to meet all local and State standards. The City's performance standards, along with construction materials and methods, are further discussed in Chapter 7 of this plan. Any development within the City's service area will be governed by City policies.

1.10.6 Water Service Extensions

The water service area is entirely under the jurisdiction of the City in regard to connection policies. For any water system extension, the developer of the property is solely responsible for all costs associated with expanding the water system beyond its present locations and/or capacities. The City may participate in lengthening the extension based upon its own determination.

1.10.7 Oversizing

In all cases, the developer of the property is solely responsible for all costs associated with expanding the water system beyond its present capacity if the expansion is so required to meet the water demands of the proposed development. The City may participate in the further over-sizing of extensions based upon its own determination.

1.10.8 Latecomer Agreements

The City currently has a "latecomers" policy regarding reimbursement of construction costs. The developer of the property is responsible for initiating the formation of the agreement.

1.10.9 Cross-Connection Control Policy

The City requires that State-approved backflow devices be installed on all potential sources of cross-connection. The design of cross-connection systems and the equipment used must be approved by the City prior to installation (see section 1.11.1H).

1.11 CONDITIONS OF SERVICE

The existence of water mains that meet minimum standards for urban development will not serve as justification to allow increased density in rural areas, now or in the future.

The City has adopted an interim policy to define the conditions under which water service can or will be extended outside the City Limits (see Appendix C). In general such service is limited to those properties previously a part of the Sweet Road Water Association, previously assessed by the City for water service,

abutting an existing main or already served by the City. It is anticipated that this policy will remain in "interim" status until such time as the City obtains additional water rights and source capacity. This approach recognizes that the City presently has limited resources and one near-term management approach is to carefully consider commitments to new service outside the present City Limits.

Persons requesting connection to the City's system, to which facilities are not available, must follow the City's Development Process. The specific conditions for connecting to the City's system and obtaining water service are detailed in the City's *Municipal Code (BMC)* and *Public Facilities Construction Agreement (PFCA)*.

Abbreviated portions of the current (as of June 2008) Blaine Municipal Code and the Public Facilities Construction Agreement (PFCA) template used for new development as they pertain to conditions of service are included in the following sections. Complete, current and updated versions of the City's codes and regulations should be consulted prior to requesting water service from the City.

The existing water system and proposed improvement plan includes water mains 8-inch in diameter or larger outside the current City limits and/or outside the City's urban growth area. The future mains are sized as transmission mains for delivery from sources in the rural area to the rural and urban areas to be served by the City.

1.11.1 Developer Process for Water

A. Application for Service *(BMC 13.04.020)*

Service and supply of water shall be furnished only after property owner completes an application, as provided by the City's Public Works Department.

B. Design and Standards *(PFCA Section VIII)*

Project Proponent will retain a licensed professional engineer(s) to design the project, prepare the necessary plans and specifications, establish the construction cost estimate, provide construction engineering, and prepare certified as-built drawings.

Project Proponent shall comply with the following standards for design and construction of the project; deviation from standard plans will not be accepted unless authorized in advance in writing:

1. Standard Specifications for Road, Bridge and Municipal Public Works Construction, current edition, jointly published by the Washington State Department of Transportation and the American Public Works Association.
2. Standard plans and specifications provided by City.

C. Main Extensions *(BMC 13.04.130)*

Where an extension of a water main is requested by one or more owners of property or consumers, the size of such main shall be determined by the City Public Works Director as outlined in the Water Department's master plan adopted by the City Council, with subsequent amendments.

An estimate of the total cost of installation of the requested extension shall be furnished, in writing, by the parties concerned in either a lump-sum or per-foot basis and a deposit of such amount shall be made before actual construction is begun. In cases where installation of the proposed extension is to be made by contractors or owner-developers, deposits shall be made to cover the estimated costs of design engineering, staking, inspecting and other related costs.

When in the interest of future growth or expansion of the water system, it is found advisable to install main capacity in excess of the amount requested by the consumer, developer or owner, and the City Council makes a finding of fact thereon, and therefore deems it advisable, it may authorize City participation in the cost of such extra capacity.

D. New Connections – Main Extensions *(BMC 13.04.160)*

It shall be the policy of the City to require any owner or developer desiring water service to extend the water distribution main to the further edge, or line of the property to be served, whether such lines are to be utilized or not. In reference to connecting water lines to the water system, such connections shall be made at the developer or property owner's sole expense at such places and under such conditions as directed by the city. The City reserves the right to require a connection or connections to be made to lines which may not necessarily be the closest lines to the developer or property owner's property at the developer or property owner's sole expense.

E. Application – Outside Areas *(BMC 13.04.191)*

The City Water Department will require each prospective customer to sign an application for water service. Application must be made in writing on a standard form available at the Public Works Department. The application shall set forth the location of the premises, address to which the bills shall be mailed or delivered, and such information as the Public Works Department may require to determine which rate applies, or such other information as the Public Works Department may reasonably require, and must be signed by the applicant. The application is merely a written request for service and does not in itself bind the Water Department to serve. Only authorized City employees will turn water on, only after credit has been established.

The City, in addition to the application for water service, will require, from all applicants residing outside the territorial limits of the city, execution of an outside utility agreement or other such documents as are deemed necessary to ensure that the property of the applicant, or any person claiming title through him, will be annexed to the City when it becomes reasonably contiguous. In the event that the applicant refuses to execute any document as required or attempts to impair or repudiate any document or agreement executed either by himself or a successor in interest, the City's duty to supply services shall cease. In the event that property reasonably contiguous to the City becomes annexed and then removed as the result of a reduction of the City limits (except when initiated by resolution) or when the proposed annexation of an area fails or is held invalid, the City's duty to provide utility service thereto shall cease.

F. Separate Meters Required – Exemptions *(BMC 13.04.200)*

Every separate single-residence building and every separate single-occupancy, commercial or other property shall have its separate meter. Multiple-occupancy, commercial or other property under single ownership may be metered by one meter; provided each unit utilizing water service shall be subject to a minimum charge on that meter as set out in BMC 13.04.080. Otherwise, the total minimum is the responsibility of the owner.

Multiple-occupancy residential buildings such as hotels, motels, trailer courts, duplexes or apartment buildings may be metered by one meter if under single ownership, or a new service and meter may be installed as set forth in this chapter.

G. Meters – Cost – Ownership *(BMC 13.04.210)*

The City Water Department shall own and furnish all meters up to and including one inch in size. The cost of larger meters shall be paid by the customer prior to installation as a payment in aid of construction, and right of ownership shall remain with the City Water Department. Where meters are presently owned by the customer, the City claims the right to replace in kind, equal or better, repair or inspect at any reasonable hour any such meters. All costs of repairs on meters larger than one inch shall be at the customer's expense.

H. Cross-Connections *(BMC 13.04.260)*

It is unlawful for any customer or consumer to have or cause to have a cross-connection between the City's water system and any other service or potential pollution source. In the event the City has cause to suspect or finds in fact that such an unlawful connection or the potential for such a connection exists, the City shall require the installation of an approved backflow-prevention device or assembly to be installed at the expense of

the property owner. If the property owner refuses to install an approved device or assembly, the City has the right to refuse water service.

Connections with backflow prevention devices or assemblies must be inspected and tested by a certified backflow assembly tester (BAT) with copies of the reports of inspection and testing provided to the public works director. Certified testing is required at time of installation and then annually thereafter within 30 days of the anniversary of installation. Seasonal connections that are required to have a backflow prevention assembly must be tested before service is allowed to resume. If a service call is necessary to restore service for the duration of the test, the fees enumerated in BMC 13.07.100 may be waived by the Public Works Director. Re-testing is required following any backflow incident or immediately following repair, relocation, reinstallation or re-plumbing of the backflow device or assembly. The City reserves the right to terminate service to customers who fail to submit an inspection test report after testing is due per this section and following subsequent notification by the Public Works Director.

1.11.2 Applicable Fees and Charges

The process of connecting to the City's system includes various fees and charges. The fees include, but are not limited to, administration fees, engineering fees, permit fees, inspection fees, general facilities fee and meter fees. The current Public Works and Water Department schedule of fees is included in Appendix D. Portions of City Code regarding water system fees are excerpted below. Recent changes regarding general facilities fees and a new charge, the regional capacity charge, are discussed at the end of this section.

A. Assessments (BMC 13.07.020)

Fees provided for in this section shall be updated and adopted annually by resolution in a unified fee schedule. The general facility fee, front footage fees and connection fees as described in the following subsections shall be annually adjusted based on the preceding year-end Seattle Consumer Price Index unless otherwise adjusted on the basis of a special rate study conducted for that purpose.

General Facility Fee – Water/Wastewater.

1. A general facility fee (GFF) shall be charged on all new or expanded service connections to the utility system pursuant to the utility fee schedule established for utility service. The GFF shall be proportionate to the cost of providing facilities and services to previously unserviced property and all changes in use that increase water demand or wastewater discharges to the municipal utility system. The GFF shall reflect the appropriate amount of the share for that connection to the utility's system net allocable plant, and shall be computed based on

equivalent residential units (ERUs). Existing connections within the system as of the effective date of this code shall be considered to have paid their proportionate share of the GFF for existing use.

2. Residential. Calculation of the GFF to determine the ERU equivalent assessment for residential service shall be computed based on the number of ERU served and shall be apportioned and assessed as follows:

   - Single-family residence 1.00 ERU/unit
   - Duplex, triplex, four-plex 0.85 ERU/unit
   - Apartments/condominiums (five or more units) 0.80 ERU/unit
   - Transitory living units (motels/hotels) 0.50 ERU/unit

3. Commercial/Industrial. Calculation of the GFF to determine the ERU equivalent assessment for commercial/industrial service shall be computed based on the water meter size, and shall be calculated according to the standard flow factor of a displacement type meter where a 5/8" x 3/4" meter shall have a flow factor equal to one ERU and shall be apportioned and assessed as follows:

Meter Size	Meter Flow Factor Equivalent ERUs	Maximum Continuous Flow Rate (gpm)
5/8" or 3/4"	1.0	10
1"	2.5	15
1.5"	5.0	25
2"	8.0	50
3"	16.0	80
4"	25.0	160
6"	50.0	250
8"	80.0	500
10"	115.0	800
Marina pump- out station	1.0	10

4. A utility service agreement shall be executed prior to issuance of a building permit for all new or expanded water and sewer service connections. The agreement shall include, but shall not be limited to, specifications of general facilities fees and associated charges for new or expanded water and sewer utility services. The charges and fees specified in the utility service agreement shall be paid prior to issuance of a building permit for all new or expanded water and sewer service connections. These charges shall be in addition to rates and other fees, assessments, and charges established for utility service.

5. For additional services on previously serviced property and changes in use that increase water demand, utility connection charges shall be due within 30 days of the City's notification mailing. If payment is not received within this period, all subsequent water utility payments of existing accounts for charges on this property shall be applied in the following hierarchy:
    a. First priority: utility connection charges, delinquent amount in arrears;
    b. Second priority: utility service charges, delinquent amount in arrears;
    c. Third priority: utility service charges, current billing period amount.

6. The utility's GFF shall be in addition to any special agreements or provisions for mitigation of impacts or requirements for expansion/upgrading to the utility system by any development or project, provided:
    a. Utility GFF credits shall be given for the value of mitigation or improvements related to additional capacity. The credits shall be proportional to the additional capacity provided by the planned capital improvement portion of the utility GFF;
    b. The total credit, if any, as provided in this subsection shall not exceed the amount of the utility GFF that applies to the additional capacity provided by the planned capital improvement portion of the utility GFF.

Front Footage Fee – Water/Wastewater.

1. Front footage fees (FFF) shall be collected on all utility system mains installed or funded by the utility, pursuant to the utility fee schedule established for utility service. The FFF shall be based on one-half the average historical cost, adjusted for inflation for a standard size eight-inch main, installed under contract by the City within the previous 48 months.

2. Calculation of the FFF of rectangularly-shaped parcels of property under individual ownership shall be based on the total front footage served by the main at the time of connection.
    a. Front footage charges for properties situated on corner lots abutting utility mains on two sides shall be computed by averaging the two sides.
    b. Properties served which are not abutting a utility main and wherein it is undesirable to extend or install a utility main shall be assessed a FFF equivalent to 50 feet of footage.
    c. Irregularly shaped parcels of property with frontage of less than 50 feet abutting a utility main shall be assessed a minimum FFF equivalent to 50 feet of footage.

d. The FFF shall be assessed and paid at the time of execution of the utility service agreement and shall be in addition to rates and other fees, assessments, and charges established for service.

Connection/Inspection Fee – Water/Wastewater.

1. A connection/inspection fee shall be charged for all service connections to the utility system pursuant to the utility fee schedule established for utility service.

2. Additional fees may be charged if a re-inspection is required as a result of the property owner/developer's failure to comply with the correction notice from a prior inspection, inaccessibility of facilities for scheduled inspections, or an unsafe site.

3. In the event it becomes necessary to remove and restore surface improvements including but not limited to asphalt, concrete and concrete streets and sidewalks in order to install a service connection, an additional fee shall be levied pursuant to the fee schedule established for removal and replacement.

4. The connection/inspection fee or deposit shall be assessed and paid at the time of execution of the utility service agreement.

5. Outside the City limits, the charge for a new service shall be 150 percent of the charge for a similar connection within the City limits. Exception to the 150 percent charge would be made for those making connection to an existing water association water main under the provision of a specific agreement.

Fire Hydrants.

1. All fire hydrants within the City's water service area shall be owned and maintained by the City. No connections shall be made to any fire hydrant except by an employee of the City for municipal purposes or by authorized fire districts for emergency purposes. The City Manager or water/wastewater Operations Manager or designee for that purpose may authorize deviations from this rule, when necessary, for the health, safety and welfare of the City, or to meet emergencies.

2. It shall be the policy of the City to assess a fire hydrant charge to existing mains for all new connections. This charge will be used solely for installations of fire hydrant assemblies in accordance with City regulations. Any new connection, development and/or subdivision required to or having provided an approved, on-site hydrant system shall be exempt.

3. Fire hydrant assessment charges for all new services outside City limits shall be 150 percent of the City hydrant assessment charges.

B. Water Service Rates

Residential Water Service Charges (BMC 13.07.40 A).

A water service charge shall be assessed for connection to and utilization of the municipal water system for the purpose of receiving water service pursuant to the current utility rate schedule established for water service.

Rates for out-of-City municipal services shall be 150 percent of the municipal rate within the City limits.

1. Residential Service Charge. The residential service charge for water shall be calculated on a monthly billing with charges based on water meter size and volume of usage. The commodity charge shall be computed to the nearest 100 cubic feet. A "residential unit" shall be defined as a single-family living unit served by a single water meter.

2. Residential Low-Income Senior/Certified Disabled Service. The residential service charge for water for low-income/senior/disabled shall be calculated on a monthly billing with charges based on meter size and volume of usage. The commodity charge shall be computed to the nearest 100 cubic feet. A "residential unit" shall be defined as a single-family living unit served by a single water meter.

   "Residential low-income seniors" are defined as those customers 62 years of age or older with income level classifications below those published annually by the federal Department of Housing and Urban Development (which establishes the 80 percent level of median income adjusted by family size and location).

   "Residential certified disabled" is defined as any customer who is certified as unable to be gainfully employed, regardless of age, and with income level classification below those published annually by the federal Department of Housing and Urban Development.

   Customers must complete an application form each year to qualify for the low-income or certified-disabled rate. The Finance Department will perform the determination of eligibility for designation as a low-income senior or disabled account from the information given on and attached with the form. Review of eligibility shall be made on an annual basis to determine any change in status as a low-income senior or disabled account from the information given on and attached with the form.

Sprinkler and Fire Protection Service Charges (BMC 13.07.40 B).

The fire protection service charge for water shall be assessed for connection to and utilization of the municipal water system for the purpose of receiving fire service protection pursuant to the utility rate schedule established for fire protection services. The fire protection service rate shall be billed monthly and shall be based on the size and type of service provided.

Fire protection service charges set forth herein shall be granted only during such times as there is no appreciable registration by meters maintained by the utility. Water used for purposes other than extinguishing fires through a fire service connection shall be charged at a rate not less than double the residential rate provided by this chapter. Rates for out-of-City municipal services shall be 150 percent of the municipal rate within the City limits.

Temporary/Construction Water Service Charges (BMC 13.07.40 C).

The temporary/construction water service charge shall be assessed to all users of the water system for the purpose of receiving temporary/construction water services, pursuant to the utility rate schedule established for temporary/construction water service charges. The charges for service, less deposit, shall be calculated at the conclusion of use and shall be based on the type and size of the meter and volume of water used. The commodity charge shall be computed to the nearest 100 cubic feet. The base charge shall include meter and appurtenance rental and set-up charge.

Persons desiring temporary water service from a fire hydrant, hose connection, or meter for the purposes of construction, special events, or other activities that are limited in duration shall make application to the utility on the form provided and make a deposit pursuant to the utility fee schedule established for temporary/construction meters.

Temporary/construction meters shall be limited to six-month duration and may be renewed subject to approval by the Operations Manager and payment received for service rendered to date. Rates for out-of-city municipal services shall be 150 percent of the municipal rate within the city limits.

Wholesale Water Service Charges (BMC 13.07.40 D).

The utility may enter into agreements to sell surplus water to other public agencies or special purpose service districts organized pursuant to the laws of the state. Such service shall be provided through a wholesale service contract, under such terms and under such conditions as shall be deemed fair and equitable by the City. All wholesale water service contracts shall be subject to City Council authorization.

Federal Agency Service Charges (BMC 13.07.40 E).

A "federal agency" unit shall be defined as a federal agency account serviced by a single water meter. The federal agency service charge for water shall be calculated on a monthly billing with charges based on water meter size and volume of usage. The commodity charge shall be computed to the nearest 100 cubic feet.

Miscellaneous Fees and Charges (BMC 13.07.100).

The utility shall set fees and charges to recover all or a portion of its administrative and operational expenses related to the services set forth herein.

Service Fee – Field.

1. A service fee shall be charged for all service calls to the owner's premises pursuant to the utility fee and rate schedule established for utility service. Service calls shall include but not be limited to turn-on/turn-off of water service, after-hours utility location requests, cross-connection control inspection, testing of meters, after-hours service calls, and repeat service calls during normal working hours.

2. After-hours, weekend, and holiday service requests shall require acknowledgment by signature of the requesting party on the form which identifies the additional services and fees provided by the service specialist. The service fee shall be added to the regular utility billing for service.

The general facilities fee was calculated for in-City connections and an additional 50% surcharge was applied for out-of-City connections. The City Council recently dropped the base GFF for in-City connections but retained the equivalent dollar amount of the surcharge portion of the GFF for out-of-City connections.

To support coordinated management of City-assets that jointly supply water to the City and Birch Bay Water and Sewer District, the City and District recently executed the "First Amendment to Agreement for Wholesale Water Supply" (see Appendix B). Included in the amendment is establishment of a regional capacity charge (RCC) applicable to new development and redevelopment in both purveyor's systems. The RCC is based on the cost of existing and planned future joint assets, including source and supply improvements, transmission mains and additional water rights. RCC revenue collected by the District is transferred to the City annually and all RCC revenue must be used by the City for joint-asset improvements, per the Agreement. The RCC is presently $854 per equivalent residential unit.

1.12 CUSTOMER COMPLAINTS

Currently, all complaints pertaining operation of the City's water system are entered into the Public Works Department Action Log and then referred directly to the Operations Supervisor. The Operations Supervisor initially investigates all complaints and advises the Public Works Director, as applicable. The City keeps records of complaints related to billing by noting the complaint in the City's billing database. Response to complaints is via the same medium the compliant was lodged. For example: emails are answered by email, letters are answered by letter, etc. In addition, any complaints that are presented directly to the City Council are noted in the minutes of the Council meeting.

CHAPTER 2

PLANNING DATA AND WATER DEMAND FORECASTING

This chapter presents basic planning data essential for the assessment of the City's water system. In order to evaluate the future performance and limitations of the water system, it is necessary to analyze the current state of the system and to determine future system needs based on foreseeable demographic trends over the next 20 years. This is accomplished by determining local population trends and the projected land use within the service area boundary of the system. These data sets are then used to determine the projected impacts to the system in regard to capacity and the necessary placement of future system improvements.

The water system analysis includes the study of historical customer growth and water usage for the system. In addition, population projections are made based on available population data and land use designations. The land use projections are based on the current land use designations established by the City and Whatcom County. All of these projections are used to determine the potential population and ultimate development of the City's water service area.

2.1 EXISTING CONDITIONS

The City's current water service area encompasses approximately 9,900 acres of land in the northwestern part of Whatcom County. The City is mostly developed along the shoreline of Drayton Harbor with small offices, commercial businesses, and low density residential. The central portions of the City are comprised of some manufacturing and a mixture of low and medium density residential. The eastern side of the service area encompasses mostly residential, including both urban and rural development.

2.1.1 Current Residential Population

Population estimates and projections have been prepared by reviewing materials published by the Washington State Office of Financial Management (OFM) and the United States Census Bureau. However, neither of these sources identifies data that is specific to the City's water service area. Information was also gathered from two additional documents: the *Whatcom County Population and Economic Forecast* prepared by ECONorthwest in May 2002 (hereafter referred to as the "ECO report"); and the *City of Blaine Population Growth Allocations 2002-2022*, prepared by Sehome Planning and Development Services in February 2003 (hereafter referred to as the "Sehome report"). Both of these documents contained specific information in regard to population projections within the City's corporate boundary.

The objectives of the ECO report included projecting a 20-year low, mid and high-range population forecast and residential housing demand forecasts for all

of Whatcom County and specific areas, including the City of Blaine. These forecasts are based largely on economic factors including trends in major employment sectors and labor force projections.

The ECO report suggested that the overall county population would grow at an annual rate of about 1.5% thru the year 2022. The report also states the historic growth rate for the City of Blaine was 3.1% for the period 1990-2000, per the 2000 US Census data. The projected mid-range population growth rate for the City is 1.4% from 2002-2012, decreasing to 1.3% from 2012-2017 and then further decreasing to 1.1% from 2017-2022. The ECO report also addresses growth in residential housing demands through the year 2022. In the report, a total of 753 new residential units are forecasted for the City of Blaine for the 20-year period 2002 to 2022. To facilitate this growth, the report projects the need for 251 acres of buildable land to support a density of 3 units/acre.

For comparison, the OFM publishes an annual report on the population within the State. The *2006 OFM Population Trends* report provides projections that are based on the 2000 Census data. The information in this report is based largely on birth and death rates and net migration for an area. This report indicates the City's annual growth rate from 2000 to 2006 was 1.3%.

Finally, the Sehome report, which was prepared specifically for the City, indicates the City has had varying growth rates from a negative value during the period 1985 to 1990 to 4.8% from 1990 to 1995. For projections into the future, the Sehome report relies heavily on the information provided in the County's ECO report to the point of selecting the ECO reports high-end growth rate as the baseline for their projections. The resulting future annual growth rate in this report is 2.4% for 2007 to 2012 and 2.1% beyond 2012.

In regard to an estimate of the current population within the water service area, most of the information contained in the above referenced documentation was prepared by making projections from the 2000 Census data. However, in comparison, each of the documents contains varying population counts for similar time periods. In addition, all of the projections were made prior to 2003, except for the information in the OFM 2006 report, and thus they largely fail to account for the escalated growth that has occurred within the City during the past two years. The City's current Comprehensive Plan was updated in September of 2006; however, the plan was not updated in regard to population information. The plan still contains older projections based on the 1990 Census data.

Considering all the information described above, the current population within the City's corporate boundary has been projected within this Comprehensive Water System Plan based on the data provided by OFM. This number is generated by the OFM and is reviewed and approved by the City Planning Department. Using the figure provide in the OFM 2006 annual report, the population of the water service area within the City limits is projected to be 4,480 people.

In regard to the population of the water service area that lies outside the City's corporate boundary, the City's GIS customer account information was used to determine the number of residential accounts located outside the City limits. From this point, an average population of 2.44 residents per connection was used to determine the population of this area. From this analysis, the estimated population within the water service boundary and outside the City boundary is 874 people. This brings the total population within the water service area to 5,354 people. It should be noted that the population estimate outside the City boundary does not account for people who utilize personal wells but live within the water service area. Therefore, this estimate relates to population served by the City's water system.

2.1.2 Total Service Connections

The City's total number of service connections at the end of the year 2006 was 2,465. The City's billing system is set up to record all accounts into one of ten categories. As shown below, the majority of the connections serve single-family homes. There are also 69 multi-family connections that serve an estimated 350 units and there are 91 connections designated as Senior/Disabled. There are 5 intertie connections serving the Birch Bay Water and Sewer District and the Bell Bay Jackson Water Association, which are represented as "Resale." The remainder of the connections serve various public and commercial connections, which are represented as "Other". This "Other" classification consists of connections including: commercial, public authority, industrial, city, international, and fish processor classes. For planning purposes, these six classes were grouped together as they have similar trends in terms of historical usage.

For this report, all connections are considered to be supplying full-time water use, i.e. no allowances have been made in an attempt to estimate part-time or seasonal use. The numbers of service connections in each of the ten categories as of December 2006 are described in the following chart.

Residential	1,977
Multi-Family	69
Senior/Disabled	91
Other	323
Resale – BBJ and BB	5
Total Accounts	2,465

2.1.3 Water Use Data Collection

The Washington State Department of Health's *Conservation Planning Requirements* (3/94) establishes specific data collection and reporting requirements for each water system by its size. The City is required to collect usage data from each source of supply and individual service meters throughout the City. Table 2.1 illustrates the City's collecting and reporting requirements as a water system with 1,000 to 10,000 connections.

TABLE 2.1
City of Blaine
Water Use Data Collection Requirements

Type of Data	*Units of Measure*	*Required Action*	*Current City Policy*
Source Meter Readings			
Source of Supply Meter Readings	Cubic Feet	Collect: Read daily but report only monthly and annual totals	Read daily.
Emergency Interties-Amount Imported	Cubic Feet	Collect: Monthly totals	N/A
Wholesale-Amount Purchased	Cubic Feet	Collect: Monthly totals	N/A
Peak Day/Peak Month	Cubic Feet	Collect: Each year's peak day and month totals	Daily and monthly well output tracked in Well Database
Non-Revenue Water			
Distribution System Loss	Cubic Feet	Collect: Annual totals	Annual totals tracked
Accounted-For Water	Cubic Feet	Collect: Annual totals	Annual totals tracked
Service Meter Readings			
Single-Family	Total cubic feet used by this customer class	Collect: Monthly totals	Collects monthly totals
Multi-Family	Total cubic feet used by this customer class	Collect: Monthly totals	Collects monthly totals

continued on next page...

TABLE 2.1
City of Blaine
Water Use Data Collection Requirements (*continued*)

Type of Data	*Units of Measure*	*Required Action*	*Current City Policy*
Service Meter Readings			
Commercial/ Government/Industrial	Total cubic feet used by this customer class	Collect: Monthly totals	Collects monthly totals
Emergency Interties – amount exported	Cubic Feet	Collect: Monthly totals	Collects monthly totals
Wholesale – amount sold	Cubic Feet	Collect: Monthly totals	Collects monthly totals
Population Serviced	ERUs and connections	Collect: Annual totals	Annual totals tracked
Economic Data	Existing water rates for each customer class	Review existing water rates for each customer class	No set policy
Conservation Data	Report type of measure and level of implementation	Collect: Once per year	Conservation programs reviewed annually

Well usage is tracked by individual supply meters at each well and is monitored and documented on a daily basis. Individual customer service meters are read by City staff on a monthly cycle. Meter readings are input into the City's billing system by office personnel who then generate monthly billings.

2.1.4 Equivalent Residential Unit (ERU)

An Equivalent Residential Unit is a unit of measure that equates non-residential water use to the amount of water consumed by a typical single-family residence. This allows the City to conduct water system planning under a common usage category. For example, a commercial establishment with a single restroom facility would most likely use much less water than the average single-family residence. In this case, the commercial connection would count as a fraction of an ERU. However, the single connection serving the Bell Bay Jackson Water Association accounts for approximately 173 ERUs.

The calculation of the planning ERU value, which is to be used for projections within this Plan is based on the recorded residential water usage for the years 1999 through 2006, as documented from customer service meter readings. It should be noted that this form of calculation does not include distribution system

loss. However, the demands attributed to distribution system loss have been accounted for and are further described in Section 2.2.4.

As for most water purveyors, the City's annual water demands will vary in response to a multitude of factors including, but not limited to, climatic and economic conditions. For this report, the average usage per ERU was determined by comparing the annual water usage from 1999 through 2006 to the average daily demand value produced from Equation 5-1 of the Department of Health's *Water System Design Manual.*

From the calculations described above, the average residential usage per year from 1999 through 2006 ranged from 178 gallons per day per ERU (gpd/ERU) to 197 gpd/ERU. The average for the eight-year period was 187.7 gpd/ERU. Based on the review of this information a value of 190 gpd/ERU has been selected as the average day demand (ADD) value for planning purposes. When considering usage averaged across the entire service area, 190 gpd/ERU is a slightly conservative figure.

This value, when used for future projections, also presumes that the growth in new residential connections will occur as additional full-time use connections and not seasonal-use connections. It is assumed that future connections would most likely represent new homes occupied by working families or full-time retired individuals. Therefore, projected water demands will be determined by ERU growth percentages multiplied by 190 gpd/ERU.

It should be noted that the 190 gpd/ERU value is much lower than the value resulting from Equation 5-1 of the *Water System Design Manual.* The value from Equation 5-1 was calculated at 397 gpd/ERU. This value is based on an empirical formula, which relates average residential usage to regional rainfall amounts. The lower value of 190 gpd/ERU is considered much more accurate since it is based on actual historical customer use and the conditions within the City. Based on annual usage in each for each customer class, Table 2.2 illustrates the total number of ERUs for the City at the end of 2006.

TABLE 2.2 City of Blaine Total Service Connections and Equivalent ERUs (December 2006)		
Customer Class	*Number of Connections*	*Number of Equivalent Residential Units*
Single Family Residential	1,977	1,977
Multi-family Residential	69	225
Senior/Disabled	91	59
Other	323	1,597
Resale - BBJWA	1	177
Resale – BBWSD	4	4,719
Total	**2,465**	**8,754**

2.2 COMMUNITY AND WATER USAGE PROJECTIONS

The projection of future water demands is a key element in the water system planning process. This data is utilized to determine the timing and sizing of required facilities. Typically, water demand projections are based on a review of proposed land use patterns, population projections and the purveyors' historical increase in water connections. The following sections describe the methods used for projecting the water use demands for the City's water system.

2.2.1 Projected Land Use

The area within the corporate boundary of the City is under the planning jurisdiction of the City and, therefore, is subject to the comprehensive land use plans and zoning codes as set forth by the City and as defined by the Growth Management Act. The City's land use designations are as follows:

- Gateway
- Public
- Manufacturing
- Central Business Market District
- Central Business Transition District
- Central Business Wharf District
- Highway Commercial
- Planned Commercial
- Marine Planned Commercial
- Residential Office
- Residential High Density
- Residential Medium Density
- Planned Residential
- Single Family 2 Unit/Lot
- Single Family 1 Unit/Lot
- Residential Low Density

The area outside the corporate boundary of the City is under the jurisdiction of Whatcom County and, therefore, is subject to the comprehensive land use plans and zoning codes as set forth by Whatcom County Code.

The Whatcom County Comprehensive Plan was completed and adopted in 1997 and updated in 2005, 2008 and again in 2009 with specific land use designations for the areas of the County. The designations are:

- Agriculture
- General Commercial
- General Industrial
- Neighborhood Commercial
- Resort Commercial
- Rural 1 Unit / 5 Acres
- Rural 1 Unit / 10 Acres
- Urban Residential (4 units/acre)
- Urban Residential Medium (6 units/acre)

Figure 2.1 illustrates the City's and the County's current land use designations as they apply to the City's water service area.

Figure 2.2 depicts the proposed future land use within the boundary of the UGA as provided by the City's Planning Department. The future designations in the UGA area are: Public Area, Residential Low Density, Residential Medium Density, Planned Residential, Urban Residential, and Manufacturing. These proposed land uses have been included in the City's adopted Comprehensive Plan.

The 2003 Municipal Water Law requires that water system plans must be consistent with locally adopted land use plans. The City has provided a "consistency statement checklist" for its portion of the service area and such has been obtained from Whatcom County for unincorporated areas of the service area (see Appendix N)[1].

2.2.2 *Projected Population*

Population projections for the water service area as presented in Table 2.3 are based on the continuation of the recent historical growth patterns for new residential connections within the City's water service area, and population data from U.S. Census blocks within the County areas of the water service area. Residential service connection growth rates within the City over the past five years have ranged from 1.58% to 6.18%. The average rate for the five-year period was 4.03% and the average over the past three years was 4.16%. For this plan, 4.1% was chosen as the projected growth rate within the City.

Population growth rates for the County areas within the water service area over the past five years have ranged from 1.22% to 1.95%. The average rate for the five-year period was 1.43% and the average over the past three years was 1.45%. For this plan, 1.4% was chosen as the projected growth rate within the County areas.

[1] The County issued a checklist in October 2008. In response to the 2009 County Comprehensive Plan update and changes to the Blaine UGA, an updated checklist has been requested from the County.

N

3000 1500 0 3000

SCALE IN FEET

H STREET
PIPELINE RD.
ODELL RD.
SWEET RD.
HARVEY RD.
VALLEY VIEW RD.
HAYNIE RD.
WEST RD.
GILES RD.
BEHME RD.
LOOMIS TRAIL RD.
DRAYTON HARBOR RD.
SEMIAHMOO PKWY
LINCOLN RD.
BLAINE ROAD

CITY OF BLAINE LAND USE

GW	GATEWAY	
PUB	PUBLIC	
M	MANUFACTURING	
CB-M	CENTRAL BUSINESS MARKET DISTRICT	
CB-T	CENTRAL BUSINESS TRANSITION DISTRICT	
CB-W	CENTRAL BUSINESS WHARF DISTRICT	
HCa	HIGHWAY COMMERCIAL	
PC	PLANNED COMMERCIAL	
MPR	MARINE PLANNED COMMERCIAL	
RPR	RECREATION PLANNED RESIDENTIAL	
RO	RESIDENTIAL OFFICE	
RH	RESIDENTIAL HIGH DENSITY	
RM	RESIDENTIAL MEDIUM DENSITY	
RPR	PLANNED RESIDENTIAL	
SF-1	SINGLE FAMILY 1 UNIT/LOT	
SF-2	SINGLE FAMILY 2 UNIT/LOT	
RL	RESIDENTIAL LOW DENSITY	

CITY OF BLAINE WATER SERVICE AREA WITHIN CITY LIMITS
CITY OF BLAINE WATER SERVICE AREA OUTSIDE CITY LIMITS
UGA BOUNDARY

WHATCOM COUNTY LAND USE

AG	AGRICULTURE
GC	GENERAL COMMERCIAL
GI	GENERAL INDUSTRIAL
NC	NEIGHBORHOOD COMMERCIAL
RC	RESORT COMMERCIAL
R5A	RURAL UNIT / 5 ACRES
R10A	RURAL UNIT / 10 ACRES
UR4	URBAN RESIDENTIAL (4 UNITS / ACRE)
URM6	URBAN RESIDENTIAL MEDIUM DENSITY (6 UNITS / ACRE)

CHS
CHS ENGINEERS, LLC

270606\comp plan fig4.DWG 11x17 1=3000 11/30/09

CITY OF BLAINE
COMPREHENSIVE WATER SYSTEM PLAN

FIGURE 2.1

LAND USE MAP

NOVEMBER 2009

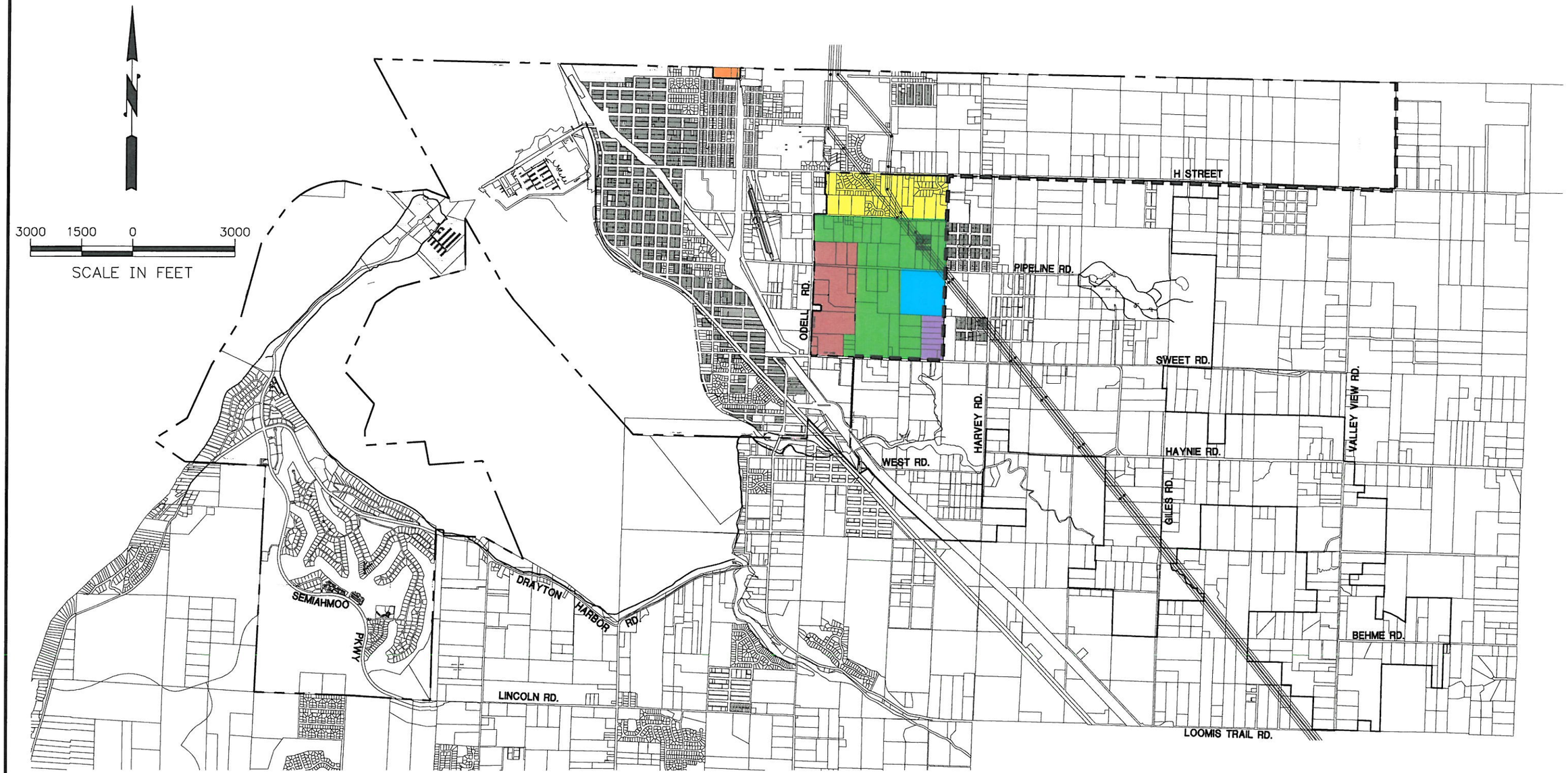

CITY OF BLAINE FUTURE LAND USE

M	MANUFACTURING	RL RESIDENTIAL LOW DENSITY
PR	PLANNED RESIDENTIAL	RM RESIDENTIAL MEDIUM DENSITY
PUB	PUBLIC	UR URBAN RESIDENTIAL

CITY OF BLAINE WATER SERVICE AREA WITHIN CITY LIMITS
CITY OF BLAINE WATER SERVICE AREA OUTSIDE CITY LIMITS
UGA BOUNDARY

CHS ENGINEERS, LLC

CITY OF BLAINE COMPREHENSIVE WATER SYSTEM PLAN

FIGURE 2.2

FUTURE LAND USE

NOVEMBER 2009

270606\comp plan figs.DWG 11x17 1=3000 11/30/09

Table 2.7
City of Blaine
Historical Water Demands by Customer Class

	Single Family	Multi- Family	Senior/ Disabled	Resale - BB/BBJ	Commercial	Public Authority	Industrial	City	International	Fish Processor	Totals
1999											
Ave. Number of Conn.	1,461	203	84	4	247	48	4	13	2	7	2,073
Total Use (gal/year)	95,079,776	20,724,088	2,625,480	250,028,724	64,669,836	11,273,856	2,236,520	1,389,036	1,424,940	7,266,820	456,719,076
Ave Day Use (gal)	260,493	56,778	7,193	685,010	177,178	30,887	6,127	3,806	3,904	19,909	1,251,285
Ave Use (gal/day/conn)	178										
*Estimated ERU's	1,461	318	40	3,842	994	173	34	21	22	112	7,018
2000											
Ave. Number of Conn.	1,527	77	86	4	241	45	4	14	2	7	2,007
Total Use (gal/year)	109,926,828	15,808,232	2,902,988	263,333,400	62,617,324	15,585,328	2,205,104	1,077,868	456,280	7,273,552	481,186,904
Ave Day Use (gal)	301,169	43,310	7,953	721,461	171,554	42,700	6,041	2,953	1,250	19,928	1,318,320
Ave Use (gal/day/conn)	197										
*Estimated ERU's	1,527	220	40	3,658	870	216	31	15	6	101	6,684
2001											
Ave. Number of Conn.	1,539	65	86	4	233	46	4	16	3	6	2,002
Total Use (gal/year)	105,680,432	14,319,712	2,746,888	247,573,040	63,714,640	18,287,852	1,472,812	1,130,976	1,802,680	7,284,772	464,013,804
Ave Day Use (gal)	289,535	39,232	7,526	678,282	174,561	50,104	4,035	3,099	4,939	19,958	1,271,271
Ave Use (gal/day/conn)	188										
*Estimated ERU's	1,539	209	40	3,605	928	266	21	16	26	106	6,757
2002											
Ave. Number of Conn.	1,659	62	87	4	232	46	4	19	3	6	2,122
Total Use (gal/year)	113,859,812	14,305,500	2,811,732	268,785,572	72,848,468	15,542,692	1,282,820	1,601,468	1,817,640	6,046,084	498,901,788
Ave Day Use (gal)	311,945	39,193	7,703	736,399	199,585	42,583	3,515	4,388	4,980	16,565	1,366,854
Ave Use (gal/day/conn)	188										
*Estimated ERU's	1,659	208	41	3,916	1,061	226	19	23	26	88	7,269
2003											
Ave. Number of Conn.	1,731	70	85	4	238	49	5	16	3	6	2,207
Total Use (gal/year)	122,553,068	14,631,628	3,090,736	285,404,636	75,589,140	22,929,192	994,092	1,466,828	1,952,280	6,360,992	534,972,592
Ave Day Use (gal)	335,762	40,087	8,468	781,931	207,094	62,820	2,724	4,019	5,349	17,427	1,465,678
Ave Use (gal/day/conn)	194										
*Estimated ERU's	1,731	207	44	4,031	1,068	324	14	21	28	90	7,556
2004											
Ave. Number of Conn.	1,792	71	85	6	243	52	4	16	3	6	2,278
Total Use (gal/year)	124,848,680	15,654,144	3,475,208	309,154,384	76,385,012	18,601,264	1,490,016	1,105,544	1,391,280	8,171,152	560,276,684
Ave Day Use (gal)	342,051	42,888	9,521	846,998	209,274	50,962	4,082	3,029	3,812	22,387	1,535,005
Ave Use (gal/day/conn)	191										
*Estimated ERU's	1,792	225	50	4,437	1,096	267	21	16	20	117	8,042
2005											
Ave. Number of Conn.	1,891	70	100	6	234	55	5	16	3	6	2,386
Total Use (gal/year)	125,063,356	16,091,724	4,197,028	340,158,984	71,333,020	15,584,580	813,824	1,189,320	1,709,180	5,770,820	581,911,836
Ave Day Use (gal)	342,639	44,087	11,499	931,942	195,433	42,697	2,230	3,258	4,683	15,810	1,594,279
Ave Use (gal/day/conn)	181										
*Estimated ERU's	1,891	243	63	5,143	1,079	236	12	18	26	87	8,799
2006											
Ave. Number of Conn.	1,977	69	91	5	240	52	4	18	3	6	2,465
Total Use (gal/year)	137,210,876	15,607,020	4,116,244	339,754,316	81,555,188	18,222,028	537,812	1,116,764	751,740	4,588,232	603,460,220
Ave Day Use (gal)	375,920	42,759	11,277	930,834	223,439	49,923	1,473	3,060	2,060	12,570	1,653,316
Ave Use (gal/day/conn)	190										
*Estimated ERU's	1,977	225	59	4,895	1,175	263	8	16	11	66	8,695

*Estimated ERU values equates to annual use in each class divided by Ave Use (gal/day/conn) for given year.

City of Blaine
Comprehensive Water System Plan

Table 2.7

Historical Water Demands by Customer Class

The population projections in Table 2.3 have been provided to illustrate the City's anticipated population within the water service area over the next 20-year period.

TABLE 2.3
City of Blaine
Projected Population Within City of Blaine's Water Service Area

End of Year	*Residential Population*	*End of Year*	*Residential Population*
2008	5,754	2014	7,155
2009	5,965		
2010	6,185	2019	8,600
2011	6,414	2024	10,357
2012	6,651	2029	12,492
2013	6,899		

2.2.3 Projected Non-Residential Water Needs

The projected commercial water use and other non-residential usage are based on historical patterns such as prior water use records and increases in non-residential accounts. In the past eight years, the City has experienced limited growth in the number of non-residential accounts; however, annual usage has continued to increase. To simplify the growth in non-residential water usage, all of the City's non-residential customers have been grouped into a category entitled "Other". This was justified by the observance of constant growth patterns for each of the individual categories.

The historical growth in non-residential connections relates to an annual increase of less than 3% from 1999 to 2006. However, the historical usage for this customer classification ranges from approximately 1.1% to 10.2% between 2000 and 2003. There was a decline in 2004 and 2005, with the greatest decline of 10% occurring in 2005. The growth projection percentage for used non-residential usage in this planning document is based on the historical growth percentage over the last four years (2002-2006) and the information projected in the ECO report. From this data, a rate of 2.0% has been selected as the growth rate for non-residential usage, i.e., the "Other" class.

Two of the largest non-residential usage accounts that contribute to the demands of the City are the resale connections to BBWSD and the Bell Bay Jackson Water Association. Each system is under contract with the City for water as described in Chapter 1. The average annual usage for BBWSD and the Bell Bay Jackson Water Association from 1999 and 2006 was approximately 288 million gallons. It should be noted that the use projections for BBWSD alone equate to

nearly one half of the water produced by the City. Therefore, the City is working closely with BBWSD on a water conservation program and development of additional water sources. Growth projections for each of these connections are individually addressed outside the "Other" category. For planning purposes the projected growth rates for BBWSD and Bell Bay Jackson are as supplied by the respective purveyor. Table 2.4 illustrates the projected usage for all connections within the City compared to the total projected resale amounts to BBWSD and the Bell Bay Jackson Water Association.

TABLE 2.4
City of Blaine
Projected Use Within Blaine Service Area
Compared to Resale Use
(gallons/day – without conservation)

	2009	*2014*	*2019*	*2024*	*2029*
City of Blaine*	817,781	974,846	1,147,021	1,362,690	1,620,106
BBWSD	957,463	1,088,628	1,278,074	1,496,446	1,730,868
Bell Bay Jackson**	32,550	38,580	45,726	47,000	47,000

*Excludes distribution system loss
** Per contract, MDD limited to 94,000 gpd – using peak factor of 2.0, capped at 47,000 gpd for ADD

2.2.4 Projected Non-Revenue Water

Throughout each year, the City has occasional water leaks or maintenance situations when they are filling, testing, or flushing water lines. Although the annual volume of water attributed to these occurrences is unpredictable due to various unknowns, the City is expected to keep these water volumes as low as possible. The City classifies both water lost and unmetered water utilized by the City (fire flow testing, mainline flushing, fire fighting, etc.) as non-revenue water. Distribution system leakage is calculated by determining the difference between the water volume withdrawn from the wells and the volume used (metered to customers) in any given unit of time. Another factor contributing to unaccounted-for water is the possible inaccuracy of water meters relating to both supply meters and individual customer meters. This problem can be minimized by a meter replacement program which replaces older service meters.

The City monitors and tabulates the quantity of water withdrawn from the wells versus how much water is sold to customers and water tracked as non-revenue water. The difference between the supply side number and the usage number is considered water loss and can be attributed to many factors such as leaks, undocumented maintenance use, reservoir elevation differences during readings and basic system operations. This water loss is reported as a percentage of the total amount of water pumped from the wells. Table 2.5 illustrates the City's percentage of water loss from 1999 through 2006.

TABLE 2.5
City of Blaine
Annual Water Loss

Year	*Well Data (gal)*	*Billed Water Usage (gal)*	*Difference (gal)*	*Percent Loss*
1999	518,384,000	456,719,076	61,664,924	11.90
2000	529,937,000	481,186,904	48,750,096	9.20
2001	520,319,800	464,113,804	56,205,996	10.80
2002	546,004,900	498,901,788	47,103,112	8.63
2003	565,480,500	534,972,592	30,507,908	5.40
2004	615,949,600	560,276,684	55,672,916	9.04
2005	610,157,600	581,911,836	28,245,764	4.63
2006	641,389,200	603,460,220	37,928,980	5.91
			5-year average =	6.72%
			8-year average =	8.19%

Table 2.5 illustrates a decreasing trend in water loss over the past 8-year period. Based on historical data since 1999, the projected non-revenue water is conservatively estimated at 8% of the annual projected ADD volume.

2.2.5 *Water Rates and Rate Impacts on Water Demand*

The City's current rate structure is included in Appendix D. The City reads and bills all of the customer accounts every month resulting in a monthly billing cycle for each customer. The customer's bill reports the previous meter reading and the current reading along with the difference shown as the current usage amount.

The current water rate structure includes the month base rate and a volume charge. The base rate for a typical residential meter (within the City limits) for usage up to three hundred cubic feet (CCF) is $10.83. The volume charge (within the City limits) for usage between three and eight CCF is $1.70. Additional rates, including those for customers outside the City limits, can be found in Appendix D.

2.2.6 *Water Demand Forecasting*

Water demand forecasting is the culmination of the information presented in this chapter. In summary, the City's historical water use records were analyzed for the period 1999 through 2006. From this data, the average day demand for one ERU was calculated to be 190 gpd. The total number of single-family residences at year-end 2006 is the baseline for the demand forecast for the single-family residence class. Individual residential connections are represented by a single ERU and a usage value of 190 gpd/ERU. The ERU values for the other customer classes are presented as a ratio of the projected use for each class normalized to

the usage of 190 gpd/ERU. The projected growth rates within the system are then applied to these ERU values resulting in the projected water demands.

Population and connection growth rates were estimated based on the available information pertaining to the City's historical growth in connections and usage. The annual amount of non-residential ERUs was reviewed for the past eight years to determine a base line for the demand forecast in each of those non-residential customer classes. The growth rate for each non-residential customer class was projected based on historical water use patterns for that category. This method accounts for the projected increase in usage when the number of accounts increases slowly or remains constant. Table 2.6 summarizes the customer class growth rates that have been applied in the demand forecasting for the period planning period 2009 to 2029.

TABLE 2.6
City of Blaine
Projected ERU Growth Rate by Customer Class

Customer Class	*Projected Annual Growth Rate (percent)*
Single Family	4.0
Multi Family	3.0
Senior/Disabled	1.0*
Other	3.0**
Resale – Bell Bay Jackson	3.5
Resale – Birch Bay Water & Sewer District	1.25 – 3.4***
*New Senior/Disabled accounts assumed at nominal rate of 1%. Annual historical growth for this class was previously embedded in with single family accounts	
** Projected ERU growth rate based on historical use trends from 2002 to 2006 and ECO report.	
*** Projected ERU growth rate based on data taken from 2009 BBWSD WSP Update: 2009-2013 = 1.25%- 2.5%, 2014-2025 = 3.4%, 2026-2035 = 2.5%.	

The current land use and the zoning of undeveloped areas were also analyzed to determine if the existing land use could support the projected growth in connections. Although it is difficult to project the growth of the community, the historical trends of the City have shown steady growth, which is assumed to continue.

In addition, the recent annexation of a large 1,180-acre area located along the U.S.-Canada border, just east of the downtown area, is planned for the development of nearly 3,800 homes. Currently, there are two major developments in the planning stages that are projected to bring approximately 1,350 homes to this area when completed. Although recent changes in the economy may somewhat delay these two developments, the potential for these areas to quickly develop exists and must be considered.

The final step in the demand forecasting is the calculation of the projected ADD, maximum day demand (MDD), and peak hour demand (PHD) based on the information developed in this chapter. The ratio of system-wide MDD to ADD was reviewed for the past eight years and a projected ratio of 2.0 was selected. The PHD demand forecasts were calculated using the formulas provided by DOH in the *Water System Design Manual*.

In summary, Table 2.7 presents the City's historical usage and calculated demands by customer class for the years 1999 to 2006. The table provides annual use and average day use for all classes. In this table the ADD per connection is calculated for single-family residential customers based on the annual use for that year. This usage volume is then divided into the daily use for each of the other classes to determine the collective (annual) ERU value for the remaining classes.

Tables 2.8 and 2.9 illustrate the City's forecasted demands assuming no benefit from future conservation efforts. The upper portion of the tables illustrates the projected ERUs and the usage per day per ERU. These are presented for each customer class as described in Section 2.1.2. The lower portion provides the projected average day, maximum day, and peak hour demands in gallons per day and gallons per minute. The bottom line of the tables presents the annual demand which must be supplied by the City's sources within the constraints of the City's water rights.

Table 2.10 presents the City's 6-year forecasted demands with the same growth rates as presented in Table 2.8. However, the total usage figures in this table reflect the effects of the projected conservation efforts. These conservation efforts include a projected decrease in the residential "peak season" usage by 1 percent each year for the period 2009 to 2014. The peak season represents the billing months of August and September. The projected conservation efforts include the reduction in use within the single family, multi-family and senior/disabled customer classes. The estimated annual savings from these efforts include approximately 432,000 gallons in 2009 to over three million gallons in 2014.

A more complete discussion on average day, maximum day, and peak hour demands can be found in Section 3.1.5 and additional information in regard to the City's conservation efforts is included in Chapter 4.

TABLE 2.8
City of Blaine
Projected Annual Water Demands 2008 - 2014
(Without Conservation)

1 ERU = 190 gpd ADD

(See Section 3.1.5)

Customer Class	2008 Demand		2009 Demand		2010 Demand		2011 Demand		2012 Demand		2013 Demand		2014 Demand	
	ERU	gpd	ERU	gpd	ERU	gpd	ERU	gpd	ERU	gpd	ERU	gpd	ERU	gpd
Single Family	2,056	390,655	2,138	406,281	2,224	422,533	2,313	439,434	2,405	457,011	2,502	475,292	2,602	494,303
Multi Family	260	49,316	267	50,796	275	52,320	284	53,889	292	55,506	301	57,171	313	59,458
Senior/Disabled	67	12,665	67	12,792	68	12,920	69	13,049	69	13,180	70	13,311	73	13,844
*Other	1,778	337,778	1,831	347,912	1,886	358,349	1,943	369,099	2,001	380,172	2,061	391,578	2,143	407,241
Resale - Bell Bay Jackson	179	31,325	186	32,550	192	33,600	199	34,825	206	36,050	213	37,275	220	38,580
**Resale - Birch Bay	4,942	938,895	5,039	957,463	5,147	977,985	5,266	1,000,579	5406	1,027,049	5,549	1,054,260	5,730	1,088,628
***Non-Revenue Water	805	140,851	761	144,624	782	148,617	805	152,870	829	157,517	854	162,311	885	168,164
Total Demands	10,085	1,901,486	10,291	1,952,417	10,575	2,006,323	10,878	2,063,746	11,208	2,126,486	11,549	2,191,198	11,966	2,270,218

Planning Totals

ADD - (gpd) (gpm)	1,901,486	1,320	1,952,417	1356	2,006,323	1,393	2,063,746	1,433	2,126,486	1,477	2,191,198	1,522	2,270,218	1,577
MDD - (gpd) (gpm)	3,802,972	2,641	3,904,835	2712	4,012,646	2,787	4,127,492	2,866	4,252,972	2,953	4,382,396	3,043	4,540,436	3,153
PHD - (gpd) (gpm)	5,894,895	4,094	6,049,912	4,201	6,213,913	4,315	6,388,645	4,437	6,579,524	4,569	6,776,393	4,706	7,016,738	4,873

ADD - gal/yr	694,042,396		712,632,355		732,307,823		753,267,266		776,167,335		799,787,247		828,629,562	

*"Other" consists of: Commercial, Public Authority, Industrial, City, International, and Fish Processor classes

**Projected water demands taken from March 2009 Birch Bay WSP Update

***Non-revenue water quantity estimated at 8% of total customer purchased quantity

TABLE 2.9
City of Blaine
Projected Water Demands 2009- 2029
(Without Conservation)

1 ERU = 190 ADD-gpd

(See Section 3.1.5)

Growth Projections

Customer Class	2009 Demand ERU	2009 Demand gpd	2014 Demand ERU	2014 Demand gpd	2019 Demand ERU	2019 Demand gpd	2024 Demand ERU	2024 Demand gpd	2029 Demand ERU	2029 Demand gpd
Single Family	2,138	406,281	2,602	494,303	3,165	601,396	3,851	731,690	4,685	890,213
Multi Family	267	50,796	313	59,458	359	68,265	417	79,138	483	91,743
Senior/Disabled	67	12,792	73	13,844	74	14,130	78	14,851	82	15,609
*Other	1,831	347,912	2,143	407,241	2,438	463,230	2,826	537,010	3,277	622,542
**Resale - Bell Bay Jackson	186	32,550	220	38,580	261	45,726	268	47,000	268	47,000
***Resale - Birch Bay	5,039	957,463	5,730	1,088,628	6,727	1,278,074	7,876	1,496,446	9,110	1,730,868
****Non-Revenue Water	761	144,624	885	168,164	1,040	197,666	1,224	232,491	1,431	271,838
Total Demands	10,291	1,952,417	11,966	2,270,218	14,065	2,668,487	16,540	3,138,626	19,335	3,669,812

Planning Totals

ADD - (gpd) (gpm)	1,952,417	1,356	2,270,218	1,577	2,668,487	1,853	3,138,626	2,180	3,669,812	2,548
MDD - (gpd) (gpm)	3,904,835	2,712	4,540,436	3,153	5,336,974	3,706	6,277,253	4,359	7,339,625	5,097
PHD - (gpd) (gpm)	6,049,912	4,201	7,016,738	4,873	8,228,255	5,714	9,656,089	6,706	11,269,320	7,826

ADD - gal/yr	712,632,355	828,629,562	973,997,711	1,145,598,646	1,339,481,493

* "Other" consists of: Commercial, Public Authority, Industrial, City, International, and Fish Processor classes

** Per contract, maximum day demand = 94,000 gpd. With peak factor = 2.0, maximum ADD estimated at 47,000 gpd. ADD/ERU = 175 gpd

*** Projected water demands taken from March 2009 Birch Bay WSP Update

****Non-revenue water quantity estimated at 8% of total customer purchased quantity

TABLE 2.10
City of Blaine
Projected Annual Water Demands 2009 - 2014
(With Conservation Goal of 1% Reduction in Peak Season Demand from 2009 to 2014)

1 ERU = 190 ADD-gpd

(See Section 3.1.5)

Growth Projections

Customer Class	2008 Demand ERU	2008 Demand gpd	2009 Demand ERU	2009 Demand gpd	2010 Demand ERU	2010 Demand gpd	2011 Demand ERU	2011 Demand gpd	2012 Demand ERU	2012 Demand gpd	2013 Demand ERU	2013 Demand gpd	2014 Demand ERU	2014 Demand gpd
Single Family	2,056	390,655	2,138	406,281	2,224	422,533	2,313	439,434	2,405	457,011	2,502	475,292	2,602	494,303
Multi Family	260	49,316	267	50,796	275	52,320	284	53,889	292	55,506	301	57,171	313	59,458
Senior/Disabled	67	12,665	67	12,792	68	12,920	69	13,049	69	13,180	70	13,311	73	13,844
*Other	1,778	337,778	1,831	347,912	1,886	358,349	1,943	369,099	2,001	380,172	2,061	391,578	2,143	407,241
Resale - Bell Bay Jackson	179	31,325	186	32,550	192	33,600	199	34,825	206	36,050	213	37,275	220	38,580
**Resale - Birch Bay	4,942	938,895	5,039	957,463	5,147	977,985	5,266	1,000,579	5,406	1,027,049	5,549	1,054,260	5,730	1,088,628
***Non-Revenue Water	805	140,851	761	144,624	782	148,617	805	152,870	829	157,517	854	162,311	885	168,164
Total Demands	10,085	1,901,486	10,291	1,952,417	10,575	2,006,323	10,878	2,063,746	11,208	2,126,486	11,549	2,191,198	11,966	2,270,218

Planning Totals														
ADD - (gpd) (gpm)	1,901,486	1320	1,952,417	1356	2,006,323	1393	2,063,746	1433	2,126,486	1477	2,191,198	1522	2,270,218	1577
MDD - (gpd) (gpm)	3,802,972	2641	3,904,835	2712	4,012,646	2787	4,127,492	2866	4,252,972	2953	4,382,396	3043	4,540,436	3153
PHD - (gpd) (gpm)	5,894,895	4,094	6,049,912	4,201	6,213,913	4,315	6,388,645	4,437	6,579,524	4,569	6,776,393	4,706	7,016,738	4,873

ADD - gal/yr	694,042,396	712,632,355	732,307,823	753,267,266	776,167,335	799,787,247	828,629,562
Conservation ADD - gal/yr	**694,042,396**	**712,200,087**	**731,414,833**	**751,883,643**	**774,261,644**	**797,326,460**	**825,573,752**
Estimated Water Savings gal/yr	**n/a**	**432,269**	**892,991**	**1,383,623**	**1,905,691**	**2,460,788**	**3,055,810**

*"Other" consists of: Commercial, Public Authority, Industrial, City, Interstate, and Fish Processor classes

**Projected water demands taken directly from March 2009 Birch Bay WSP Update

***Non-revenue water quantity estimated at 8% of total customer purchased quantity

CHAPTER 3

SYSTEM ANALYSIS

The purpose of this chapter is to evaluate and determine if the existing facilities within the City of Blaine's water system are capable of supplying a sufficient quantity and quality of water to the City's customers while meeting the existing and projected demands of the system. In this chapter, five primary planning elements are analyzed including:

- System design standards
- Water quality
- System description and analysis
- Summary of system deficiencies, and
- Selection and justification of proposed improvements

The design standards identify the design criteria that apply to the City's system and facilities. The design and water quality standards for Group A public water systems are established in Chapter 246-290 WAC. These standards provide a set of minimum design and performance criteria for new water utilities and for all existing utilities planning to install capital facilities for expansion purposes. System description and analysis includes a description of the general condition of each system component and an analysis of the physical capacity of each component. The summary of system deficiencies leads to identification of the improvements needed for the water system to meet present and future demands. The selection and justification element for proposed improvements analyzes and discusses the improvements necessary to eliminate existing and anticipated deficiencies.

3.1 PERFORMANCE AND DESIGN STANDARDS

This chapter establishes the criteria to be used in the planning and analysis of facilities which will be required by the City to meet future customer demands. The criteria includes the consideration of adequate water quality and supply and the sizing of storage and distribution facilities. The design criteria are based on historical City records, design standards recommended by the Washington State Department of Health and other accepted standards normally used in the design and construction of water facilities.

The Washington State Department of Health's *Water System Design Manual*, dated August 2001, was utilized for this system analysis. The primary design criteria included maintaining system pressures at or above 30 pounds per square inch (psi) in the distribution system during all demand conditions including peak hourly demand. In addition, system pressures of 20-psi would be maintained under maximum day demands combined with fire flow conditions.

3.1.1 *Abbreviations*

In this report, a number of common technical terms and expressions have been abbreviated. These terms and their abbreviations are presented here.

ADD	Average Day Demand (gallons/day/ERU)
BBWSD	Birch Bay Water and Sewer District
cfs	cubic feet per second
DOH	Washington State Department of Health
ERU	Equivalent Residential Unit
gal	gallon(s)
g/d/conn	gallons per day per connection
gpd	gallons per day
gpm	gallons per minute
HGL	Hydraulic grade line
MDD	Maximum Day Demand (gallons/day/ERU)
mgd	million gallons per day
mg/l	milligrams per liter
MSL	Mean Sea Level
PHD	Peak Hour Demand (gpm)
ppb	parts per billion
ppm	parts per million
psi	pounds per square inch

3.1.2 *Reference Datum*

The planning of facilities in this study are based on the National Geodetic Vertical Datum 1988 (NGVD 88) with MSL at elevation zero. The City's standard datum is also NGVD 88. All elevations in regard to water surface elevations and pressure zone notations are referenced from this datum.

3.1.3 *Period of Design*

In the planning of water system facilities, it is necessary to design facilities that can provide the projected system demands through a specific period of time. This portion of time is known as the *period of design*, and, for this plan, the period spans from the date of this plan to the year 2029. Specific planning years that were analyzed include the years 2009, 2014, 2019, 2024 and 2029 (see footnote in Section 3.3.6 for hydraulic modeling discussion). The planning years reflect the fiscal year of the City, which runs from January 1st to December 31st.

In planning facilities with capacities adequate for the next 20 years, it should be noted that these requirements do not need to be fulfilled initially. A more realistic approach to the development and improvement of water system facilities is a plan that reflects the phasing of improvements.

3.1.4 *Water Quality and Design Parameters*

Public water systems are obligated to supply their customers with safe, palatable water. Water quality must conform to the water quality requirements in the Federal Safe Drinking Water Act (SDWA) as monitored and enforced by the DOH. These water quality standards include monitoring parameters and the setting of maximum contaminant levels (MCLs) for a variety of potential organic, inorganic and radioactive constituents in the water supply.

The water supply must be free of pathogenic bacteria and carry a chlorine residual throughout the water system. There are also secondary MCLs for certain constituents that may not result in health problems, but may lead to taste, odor and other undesirable aesthetic properties in the water. Additionally, the water must be periodically tested for asbestos and lead and copper to determine the interaction of the water with the distribution piping and private service/plumbing piping used for delivery of water to the customer's tap.

DOH relies on the SDWA, various publications, other agencies and the utility itself to develop and establish water quality and design criteria. Chapters 246-290-200 and 246-290-300 WAC provide the various system design and water quality criteria administered by DOH. These chapters provide that:

(1) Purveyors shall ensure that good engineering criteria and practices are used in the design and construction of all public water systems, such as those set out in:

- Department guidance on design for Group A public water systems;
- The most recently published editions of the *International Building Code (IBC)* and the *Uniform Plumbing Code* (UPC);
- The most recently published edition of *Recommended Standards for Water Works, A Committee Report of the Great Lakes - Upper Mississippi River Board of State Public Health and Environmental Managers*;
- Standard specifications of the American Public Works Association (APWA), the American Society of Civil Engineers (ASCE), the American Water Works Association (AWWA) and or the American Society for Testing and Materials (ASTM);
- Design criteria, such as contained in current college texts and professional journal articles, acceptable to the department;
- Chapters 173-160 WAC Minimum Standards for Construction and Maintenance of Water Wells;
- The latest edition of the PNWS-AWWA *Cross-Connection Control Manual*, and the University of Southern California (USC) *Manual of Cross-Connection Control.*

(2) In addition, purveyors of new or expanding public water systems shall consider and use, as appropriate, the following design factors:

- Historical water use;
- Community versus seasonal or recreational uses of water;
- Local conditions and/or regulations;
- Community expectations;
- Public Water System Coordination Act considerations, where appropriate;
- Provisions for systems and component reliability in accordance with WAC 246-290-420;
- Wind pressures, seismic risk, snow loads, and flooding; and
- Other information as required by the DOH.

3.1.5 Demand Factors: ADD, MDD and PHD

To provide an overall perspective of the total water consumption within the City, Table 3.1 presents a historical summary of the annual quantities of water pumped from the City's wells for the period 1999 through 2006. This information is based on the actual well pumping records. The quantities reported reflect the water delivered to City customers and the City's quantities of unaccounted-for water. Unaccounted-for water represents all non-metered water uses such as water for construction use, pipe flushing, system operations, leaks and breaks, fire fighting, meter inaccuracies and other unspecified losses within the system.

By comparing well meter data with customer water sales data, it is estimated that the City's average annual amount of unaccounted-for water has ranged from roughly 5 to 12 percent of the total water pumped from the wells. These volumes are attributed to leaks in the aging pipes, leaks in the storage facilities and meter inaccuracy within the City's water system.

In Table 3.1, the average usage per day values represent the total annual withdrawal amounts divided by 365 days. More specific demands, such as ADD per ERU, are further described in Section 2.1.4.

The City's projected water demands are illustrated in Tables 2.8 through 2.10 located at the end of Chapter 2. The demand forecasts are represented in terms of the projected number of ERU multiplied by the ADD. Typical water demands will vary yearly in response to climate changes and, in some cases, economic conditions and other variables. Utilizing the City's historical usage records, the demands per ERU were determined as described by the following sections and as summarized in Table 3.2.

TABLE 3.1
City of Blaine
Historical Annual Well Withdrawal
1999-2006

Year	Estimated Number of Connections	Annual Water Withdrawn (gallons)	Annual Average Usage Per Day (gallons/day)
1999	2,189	518,384,000	1,420,230
2000	2,183	529,937,000	1,451,882
2001	2,235	520,319,800	1,425,534
2002	2,263	546,004,900	1,495,904
2003	2,387	565,480,500	1,549,262
2004	2,492	615,949,600	1,687,533
2005	2,590	610,157,600	1,671,665
2006	2,647	641,389,200	1,757,231

Average Day Demand (ADD): The determination of ADD depends on how the figure is calculated and how the value will be used. Taking the City's entire quantity of water withdrawal in the year 2006 and dividing it by the number of connections to the water system equates to a usage of 663 g/d/conn. This includes all of the water sold to BBWSD and Bell Bay Jackson Water Association. Removing the use for these two accounts and their associated number of connections from the calculations results in a 2006 usage of 274 gpd/connection. However, this figure is skewed by the variation in usage patterns encompassing the City's different customer classes. It should be noted that the above values utilize the City's well data, which also incorporates the City's annual amount of unaccounted-for water into the ADD figures.

For planning purposes, the annual volumes of water consumed by single-family residences from 1999 through 2006 were utilized to compute the City's ADD per ERU. This becomes the planning ADD value, which is used to calculate the future demands. This figure was also compared to the results from DOH equation 5-1, as presented in the DOH *Water System Design Manual*. This DOH equation is generally used to determine the usage per ERU when no historical customer data is available.

When considering the annual total volume of water used by the residential customers divided by the number of residential connections, the average daily demands from 1999 to 2006 have remained fairly constant, ranging from 178 to 197 gallons/day/connection. In comparison, Equation 5-1 from the DOH manual utilizes the amount of local annual rainfall to calculate the ADD value. The closest weather station to the water system is Station #450729, which is located

in the City of Blaine. The reported annual rainfall from this station was entered into the DOH equation resulting in an estimated ADD value of 397 gallons/day/ERU.

It should be noted that the above values utilize the City's customer usage records, and thus, do not include the City's annual amount of unaccounted-for water in the ADD figures. This is the preferred method as it determines the actual daily demands of one ERU. For planning purposes, the volume of unaccounted-for water is then added as a percentage of the total volume of water withdrawn.

For the purpose of this plan, a volume of 190 gallons/day/ERU has been chosen as the planning ADD value for all future ERUs. In comparison, the figure calculated from DOH equation 5-1 is much higher than the City's actual demand records illustrate. Therefore, the value derived from historical usage is considered to be the best value for planning.

The 190 gallons/day/ERU figure was chosen as a conservative representation of system demands reflecting the available data and the comparisons described above. In using this figure, different elements of the water system have been sized by varying controlling factors, which are, in effect, multipliers of the ADD value.

Maximum Day Demand (MDD): The DOH manual recommends a ratio of 1.5 to 3.0 for average day to maximum day demands based on experience with various systems within Washington State. The annual MDD for the City's water system was calculated by analyzing the City's daily well log data.

Each of the eight wells within the City are metered and usage is recorded every day by City staff. The annual peak day usage from the City's well log data for the years 1999 through 2006 was used to determine the MDD for the City. By using this data, a more accurate figure is derived compared to simply applying a standard multiplier to the ADD value. From 1999 through 2006, the City's MDD was generally reached on days in late June through late August. Results from the analysis reflects an average maximum day demand factor of approximately two times the average day use. Therefore, the MDD value for water system planning shall be 380 gallons/day/ERU.

Peak Hourly Demand (PHD): Peak hour demand is used in the sizing of storage, transmission and distribution lines and the design of pumping facilities. No hourly usage figures exist for the system; therefore, equation 5-3 in the DOH manual was used to calculate the PHD. The resulting peaking factors range from 3.10 for the year 2009 to 3.07 for the year 2029.

Table 3.2
CITY OF BLAINE
Water Demand Factors and Projections 2008 - 2029

Water Demand Factors

1 ERU = 190 ADD (gpd) (see Section 3.1.5)

MDD = 380 (gpd) (see Section 3.1.5)

PHD = (MDD/1440)[(1.6)(ERU)+225)]+18 (see DOH Eq. 5-3)

ERU = Equivalent Residential Unit
ADD = Average Day Demand
MDD = Maximum Day Demand
PHD = Peak Hour Demand

gpd = gallons per day
gpm = gallons per minute
Mg/yr = Million gallons per year
cf/yr = cubic feet per year

Water System Demand Projections

		ADD				MDD				PHD
Year	# ERU	gpd	gpm	Mg/yr	cf/yr	gpd	gpm	Mg/yr	cf/yr	gpm
2008	10,085	1,901,486	1,320	694	92,774,014	3,802,972	2,641	1,388	185,548,027	4,094
2009	10,291	1,952,417	1,356	713	95,258,970	3,904,835	2,712	1,425	190,517,940	4,201
2010	10,575	2,006,323	1,393	732	97,889,029	4,012,646	2,787	1,465	195,778,057	4,315
2011	10,878	2,063,746	1,433	753	100,690,719	4,127,492	2,866	1,507	201,381,437	4,437
2012	11,208	2,126,486	1,477	776	103,751,816	4,252,972	2,953	1,552	207,503,632	4,569
2013	11,549	2,191,198	1,522	800	106,909,136	4,382,396	3,043	1,600	213,818,272	4,706
2014	11,966	2,270,218	1,577	829	110,764,545	4,540,436	3,153	1,657	221,529,090	4,873
2019	14,065	2,668,487	1,853	974	130,196,192	5,336,974	3,706	1,948	260,392,384	5,714
2024	16,540	3,138,626	2,180	1,146	153,134,427	6,277,253	4,359	2,291	306,268,853	6,706
2029	19,335	3,669,812	2,548	1,339	179,051,129	7,339,625	5,097	2,679	358,102,257	7,826

3.1.6 Storage Requirements

There are four components of storage that must be reviewed when designing a community water system. These are operational, equalizing, standby and fire suppression storage. Additionally, any amount of unusable storage, known as "dead storage", must also be considered. Chapter 9 of the DOH Design Manual provides recommendations and equations for determining the quantities of each component. Each of the five components are detailed below.

A. Operational Storage

Operational storage (OS) is the volume of storage reserved for supplying system demands during times that the sources of supply are not delivering water. This volume may vary with the settings of reservoir control levels and the supply pump on-off settings.

B. Equalizing Storage

Equalizing storage (ES) provides water during periods of high consumption when the capacity of the source of supply cannot meet the demands of the system. Providing ES allows for the use of smaller, more economical pumps and places less demand on the system source(s).

The volume of storage required for equalizing purposes depends upon the PHD and the rate of supply from the sources. The DOH design manual sets forth a procedure for determining the required ES utilizing the typical variables historically found in most systems.

From the DOH Design Manual, Equation 9-1 relates rate of supply (pumping capacity) with PHD to determine an applicable ES volume.

Equation 9-1:

ES = (PHD - Qs)(150 min), where

PHD = Peak Hour Demand (gpm)
Qs = sum of all installed and active sources of supply (gpm)

C. Standby Storage

Standby storage (SB) is defined as the volume of storage necessary to augment the available supply in the event that the system's largest source is out of service for a period of time. In general, the City's system can be considered a multiple source system supplied by the six wells within the City. However, the upland areas of the City must be carefully evaluated considering the limitations of providing water from the lower zones. The required volume of SB for multiple sources is determined by DOH

Equation 9-3, which assumes the loss of the supply from the source with largest capacity.

Equation 9-3:

$SB = (2 \text{ days})(ADD)(N) - t_m (Q_S - Q_L)$, where

N = Number of ERUs
Q_S = Sum of all installed and continuously available sources (gpm)
Q_L = The largest capacity source (gpm)
t_m = time remaining sources are pumped (usually 1440 min.)

When analyzing a multiple source system, it is assumed the source with the maximum output is not operating. For single source systems, the recommended SB requirement is two times the ADD times the number of ERUs.

In any event, it is recommended that the SB volume be not less than 200 gallons per ERU.

D. Fire Suppression Storage

The fourth component of storage is the amount required for fire suppression storage (FSS). The fire flow rates for a municipality are generally determined by the local fire jurisdiction and are calculated on a risk basis. At times, the flow rates required for the highest risk structures can determine the maximum fire flow requirement for the entire municipality. The factors evaluated in determining required fire flows per building type are type of construction, area, number of stories, exposures and internal fire protection services.
The volumes of FSS are determined by the multiplication of required volumes by the stipulated durations as illustrated in the DOH Equation 9-4 below.

Equation 9-4:

$FSS = (FF)(t_m)$ where

FF = required fire flow rate (gpm)
t_m = required duration (hours)

E. Dead Storage

Dead storage (DS) is the volume of water within a reservoir, tank or standpipe that, due to topography, piping configuration, or proximity to service connections is not available for distribution under normal operating conditions. This may be the volume below an outlet or the upper volume

of a facility which is too high to be filled by the system's source or booster pumps.

3.1.7 Required Fire Flow Rate and Duration

Fire protection is of primary importance in all communities. In most circumstances, fire flow requirements impose the greatest demands on a water system, as the required flows can be one to two times the projected PHD.

The City's Public Works Department and the local Fire Chief have been working together to determine the fire flow rates and durations that would be required within the City's water service area. The City Council has adopted the latest edition of the Uniform Fire Code excluding Appendix IIIB, which sets forth specific fire flow rates and durations based on structure type. Preliminary discussions in regard to fire flow rates have been trending toward a required fire flow rate of somewhere between 750 to 1000 gpm for 60 minutes. However, a final decision had not been made prior to the completion of the calculations and hydraulic modeling used in the creation of this plan. Therefore, since a determination as to the required fire flow rate had not been agreed upon, the more conservative fire flow rate of 1,000 gpm and a duration of 60 minutes were used in the planning process.

Since the completion of these calculations the Fire Marshall of North Whatcom Fire and Rescue has indicated that residential and industrial areas within the City of Blaine shall have a minimum fire flow of 1,000 gpm.

3.1.8 Distribution System Pressure

Water systems shall be designed to maintain a minimum residual system pressure of 30-psi under PHD conditions, excluding fire demand. This pressure shall be maintained at the meter, or the property line if no meter is present. A residual pressure of 20-psi shall be maintained under the combined fire flow and MDD conditions.

The size of new water lines shall be as necessary to provide the minimum required fire flow and/or PHD, whichever is greater. New mains shall also maintain a maximum velocity of 8 feet per second. The maximum pressure at the point of a customer connection should be 80 psi. The customer shall regulate pressures into their private system.

All water main extensions shall be designed in accordance with the City's standard specifications by a professional engineer to suit the actual conditions of the project location. All mains shall be constructed in accordance with the requirements of the City's standards and specifications, which are referenced in Chapter 7 of this plan. All water mains to be maintained by the City shall be owned and operated by the City.

3.1.9 Minimum Pipe Size/Looping

Water mains shall be a minimum of 6-inch diameter if providing fire flow, or larger in accordance with this plan. Water mains not providing fire flow may be smaller under certain conditions. Fire hydrant runs shall be a minimum of 6-inch diameter for runs up to 50 feet, unless otherwise approved. Runs of 50 feet and longer shall be a minimum of 8-inch. An engineering analysis shall be completed for any extension of the system. This analysis shall consider the specific hydraulic conditions and fire flow requirements for the development.

Water mains within a development shall be "looped" where feasible and/or designed with multiple connections to the existing water distribution system in accordance with this plan. Water line extensions shall be continued through or along the property being developed for potential future connection or extension.

3.1.10 Valve and Hydrant Spacing

Fire hydrants shall be located according to the standards as set forth herein and the most current requirements of the International Fire Code as adopted by the City. The current hydrant spacing is 500 feet for all new hydrants. Any hydrant branch exceeding 50 feet in length shall be 8 inches in diameter, unless otherwise approved.

3.2 WATER QUALITY ANALYSIS

With respect to water quality, all Group A water systems must comply with the provisions of the SDWA. DOH enforces the SDWA and regulates water quality parameters such as bacteriological contaminants, inorganic chemical and physical parameters (IOCs), volatile organic chemicals (VOCs), synthetic organic chemicals (SOCs), lead and copper, radionuclides, trihalomethanes, arsenic and asbestos.

There are currently ten operating City-owned wells within the City's water service area. Of these wells, eight are located within the City's well field and the City's system generally operates on these wells. The two wells that are located outside the well field are only used during peak summer conditions. The raw water quality for the majority of the main wells is considered good and has remained within State guidelines for all regulated contaminants.

However, in late 2007, a testing sample for Well #8 indicated an arsenic level of 12 ppb, which is higher than the current MCL of 10 ppb. The capacity of this well is 100 gpm and the well is only used to meet peak summer demands. The City has been in contact with the regional DOH office in regard to an action plan in response to this finding. Per the action plan, the City has conducted investigative sampling that indicated the arsenic level in the system close to Well #8 is 4 ppb prior to the water reaching any customers. The sample was read at a point where water from other wells had been blended with the water from Well #8. To further investigate the arsenic levels in this well, the City will perform

quarterly sampling of this well once the well is put into production for the summer. As a result of exceeding the MCL, the City will be required to include information in the City's CCR for the 2007 testing year. The additional language will explain the increased monitoring and the investigative testing that was performed in response to exceeding the MCL. Should the City elect to begin using this well as a full time source, DOH will require the development of a defined blending program.

Aside from the above referenced parameters of Well #8, the water delivered to the customers' taps is generally high in quality and customer complaints have been few. The City disinfects the water entering the well field reservoir and detectable chlorine residuals are maintained at the remote points within the distribution system.

The City also has additional chlorination capabilities at BPS #3, where the City's supply to West Blaine resurfaces from a pipeline buried under Drayton Harbor. Samples near the booster station consistently have chlorine concentrations of about 0.08 mg/L, and samples taken from the far end of the City's water system, in the vicinity of St. Andrews Green, consistently have chlorine concentrations of at least 0.07 mg/L.

As a water purveyor that utilizes groundwater as its source of supply, the City is required to perform the following under WAC 246-290-300:

- Test source water for radionuclide levels
- Test source water for organics (VOCs & SOCs)
- Test source water for nitrate levels

The City receives an annual Water Quality Monitoring Report (WQMR) from DOH and conducts sampling as specified in the report. At this time, the City may be eligible for waivers in regard to some of the testing requirements; however, the DOH is currently revising the waiver process. Therefore, the extent of the City's waivers is unknown at this time. New guidelines in regard to waivers will accompany the City's 2009 WQMR.

As a water purveyor that sells its water, the City is required to perform the following under WAC 246-290-300(2)(b):

- Coliform sampling and analysis
- Lead and copper sampling
- Asbestos monitoring
- Collection of disinfection by-product (DBP) samples
- Distribution system residual disinfectant concentration monitoring per WAC 246-290-451

The City currently conducts coliform sampling per their Coliform Monitoring Plan (see Chapter 6). The City currently takes five coliform samples per month. The City also monitors for lead and copper which includes taking 20 samples during

the three year testing cycle. The current cycle is from 2008 to 2010. Asbestos monitoring was last completed in 1996. The detected level of asbestos was 0.202 micro-fibers per liter (MFL), which is below the maximum contaminant level. The next asbestos sample is expected to be required in 2010.

The City initiated testing for trihalomethanes and haloacetic acids in accordance with the EPA's Stage 2 Disinfectants and Disinfection Byproducts Rule (Stage 2 DBPR) in the summer of 2008. The City will be required to develop a monitoring plan for Stage 2 DBPR compliance monitoring by October 2013 and sample the distribution system for each of these disinfection byproducts the following year. Additional monitoring may be required in response to new regulations promulgated by EPA and DOH.

As referenced above, WAC 246-290-451 addresses water system disinfection and the need to maintain a detectable residual disinfectant concentration in all parts of the distribution system. The residual concentration is to be monitored on a daily basis at representative points within the system. The City is currently meeting this criterion by checking the residual concentration at various locations within the system.

To meet Federal requirements the City publishes an Annual Water Quality Report. In review of the 1999 through 2008 reports, there have been no documented instances of maximum contaminant level exceedance. A copy of the City's Annual Water Quality Report, for testing through 2008, is included in Appendix E.

3.3 SYSTEM DESCRIPTION AND ANALYSIS

The City's major facilities and distribution system are described in the following sections and are illustrated in Figures 3.1 and 3.2

3.3.1 Source of Supply

The City currently utilizes ten groundwater production wells as its sources of supply. These wells range from depths of 75 feet to 800 feet. Wells #1R, #2, #3R, #4, #4.1, #5, #5.1 and #6 are located in the City's well field. These eight wells are generally utilized as the City's main sources of supply. Well #7 is located on 12th Street, close to H Street, and Well #8 is located in Lincoln Park. The use of these two wells is generally restricted to peak summer months due to minor aesthetic properties and the fact that the two wells are not directly connected to the City's chlorination system. Wells #9 and #10 are located east of the City on Boblett Street. These two wells are not currently configured to supply water to the system. However, Well #9 is being prepared to supply water to the 440-zone and is scheduled to be on line in 2010. Well #10 was drilled as a monitoring well and is currently not scheduled to be used as a production well. In addition to these wells, the City recently completed and placed in service Well #5.1 and recently completed drilling Well #8.1. Well 8.1 will be placed in service in 2011.

Table 3.3 and the subsequent text below provide detailed descriptions of each well. Figure 3.1 illustrates the location of these wells relative to the system.

TABLE 3.3
City of Blaine
Well Information

Well #	Location	Aquifer (Deep / Shallow)	Well Diameter (in.)	Depth[4] (ft.)	Year drilled, redrilled	Design Well Capacity (gpm)	Present Pumping Capacity (gpm)
1R	Well field	D	12,8	733	1995	450	450
2	Well field	D	8, 6	700	1963, 1992	200	156
3	Well field	S	8	75	1961	N/A	N/A
3R	Well field	D	16, 12, 8	858	1998	500	500
4	Well field	S	8, 6	98	1965	400	200
4.1	Well field	S	16, 12	108	2005	400	200
5	Well field	S	8, 6	320	1975	450	335
5.1[1]	Well field	D	16, 12, 8	820	2007	1215	309
6	Well field	S	12, 8	261	1985	300	80
7	12th Street	S	12	247	1929	320	243
8	Lincoln Park	S	12	200	1969	300	100
8.1	Lincoln Park	D	12	760	2007	650	N/A
9[2]	Boblett St.	S	12, 8	303	1991	200	N/A
10[3]	Boblett St.	S	8	158	1991	N/A	N/A

Present pumping capacity is based on approximate sustained well pumping capacity.
[1]Well 5.1 completed 2009 with approximately 309 gpm capacity – preliminary testing indicated a well pumping capacity of up to 1,260 gpm but this may be limited to 1,215 by water rights (see Chapter 4).
[2] Well #9 is an undeveloped well. Preliminary pump testing indicated a well pumping capacity of 200 gpm.
[3] Well #10 was drilled as a monitoring well.
[4]Well Depth represents drilled depth
Well diameter, depth and year drilled taken from "Installation and Testing of Production Well PW-5.1" Report *(Associated Earth Sciences Inc. 2007)*
For additional information see Appendix F

Wells Within the Well Field

The City's well field is located approximately two and a half miles southeast of the downtown area. The property, which is owned and maintained by the City, encompasses a wooded area of approximately 240 acres. The eight wells in the well field, which are currently considered by the City as usable wells, are

identified as Wells #1R, #2, #3R, #4, #4.1, #5, #5.1, and #6. Wells #1R, #2, #3R and #5.1 are drilled into a deeper confined aquifer and Wells #4, #4.1, #5 and #6 are drilled into a shallow aquifer.

All of the wells within the well field directly supply the well field reservoir except Well #6. The wells pump into a 16-inch pipe located alongside the chlorination building and from this point the line gravity feeds to the reservoir. The reservoir level is set to the 171-zone. Well #6 is used to supply two homes just to the west of the well field. The water from this well does not pass through the City's chlorination system.

The operation and control of the wells are by manual control. City staff monitors the well and reservoir levels seven days a week. Wells are manually activated and deactivated as system demands change. Each of the wells within the well field is further described below.

Well #1R is a 12-inch diameter well, which is approximately 733 feet deep. The well was drilled in 1995. The well is considered to be in good condition but this well does not have a well house or building. The well is centered in a large concrete pad and the control panel is located on the pad. A cyclone fence encompasses the perimeter of the pad. This well is currently listed as unapproved by DOH. Source approval per WAC 246-490-130 is required for this well.

Well #2 is an 8-inch diameter well, which is approximately 648 feet deep. The well was drilled in 1963. The pump was replaced sometime in the mid 1990s. The well is considered to be in good condition. There has been a problem with sand in this well; therefore, rehabilitation and capacity upgrade is planned. This well does not have a well house or building. The well is centered in a large concrete pad and the control panel is located on the pad. A cyclone fence encompasses the perimeter of the pad.

Well #3R is a 12-inch diameter well, which is approximately 747 feet deep. The well is considered to be in good condition. This well is also currently listed as unapproved by DOH. Source approval per WAC 246-490-130 is required for this well.

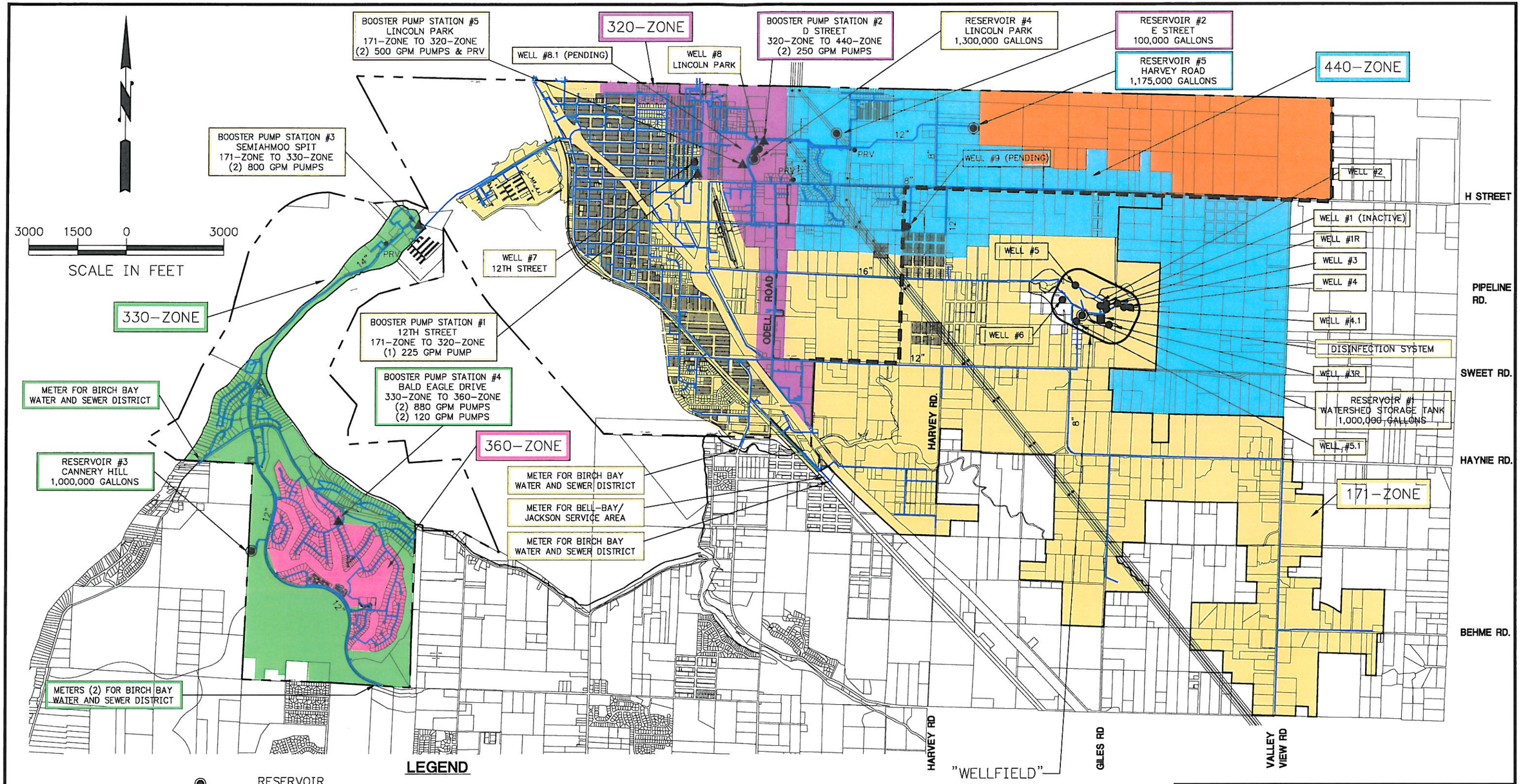

CHS
CHS ENGINEERS, LLC

CITY OF BLAINE
COMPREHENSIVE WATER SYSTEM PLAN

FIGURE 3.1

WATER SYSTEM PRESSURE ZONES AND MAJOR FACILITIES

NOVEMBER 2009

270600\comp plan fig3.DWG 11x17 1=3000 10/12/09

3000 1500 0 3000

SCALE IN FEET

H STREET

PIPELINE RD.

ODELL RD.

SWEET RD.

HARVEY RD.

VALLEY VIEW RD.

WEST RD.

HAYNIE RD.

GILES RD.

BEHME RD.

DRAYTON HARBOR RD.

SEMIAHMOO PKWY

LINCOLN RD.

LOOMIS TRAIL RD.

PRV

14"

12"

8"

6"

16"

LEGEND

- 3/4"
- 1"
- 2"
- 3"
- 4"
- 6"
- 8"
- 10"
- 12"
- 14"
- 16"

- RESERVOIR
- WELL
- PUMP STATION
- PRV
- DISINFECTION SYSTEM
- CITY OF BLAINE WATER SERVICE AREA WITHIN CITY LIMITS
- CITY OF BLAINE WATER SERVICE AREA OUTSIDE CITY LIMITS
- URBAN GROWTH AREA BOUNDARY

- 171-ZONE
- 320-ZONE
- 330-ZONE
- 360-ZONE
- 440-ZONE
- FUTURE PRESSURE ZONE

CHS ENGINEERS, LLC

CITY OF BLAINE
COMPREHENSIVE WATER SYSTEM PLAN

FIGURE 3.2

EXISTING WATER SYSTEM

NOVEMBER 2009

2706.06\comp plan figs.DWG 11x17 1=3000 11/30/09

Well #4 is an 8-inch diameter well, which is approximately 98 feet deep. The pump in this well was replaced in the summer of 2007. The well is considered to be in good condition. At times this well has been referred to as Well #4.1 and the City's new well in close proximity to this well was referred to as Well #4.2. However, the permanent designation for this well is Well #4. DOH noted in a January 2009 sanitary survey that the casing vent was unscreened. This deficiency has been addressed by the City.

Well #4.1 is a 12-inch diameter well, which is approximately 108 feet deep. The well was drilled in 2005. The well is considered to be in good condition. This well does not have a well house or building. However, the well is centered in a large concrete pad and is covered with a lockable, insulated structure. The control panel is located on the concrete pad and a cyclone fence with razor wire encompasses the perimeter of the pad. It has been noted that during peak times the draw down in this well and Well #4 are influenced by the use of each other, due to their close proximity. As stated above, at times this well has been referred to as Well #4.2 and the City's older well in close proximity to this well was referred to as Well #4.1. However, the permanent designation for this well is Well #4.1.

Well #5 is an 8-inch diameter well, which is approximately 310 feet deep. The well was drilled in 1975 and is considered to be in good condition. This well is housed within a building. The control panel is located within the building. There is no fence around the building. It has been noted that, over a long period of time, this well must be shut down due to drawdown.

Well #5.1 is a 12-inch diameter well, which is approximately 805 feet deep. The well was drilled in the spring of 2007 was placed in service in July 2009. The well is projected to be used to its full capacity; however, current limitations in water rights have dictated the installation of a lower capacity pump until additional rights are obtained. The well has DOH approval for a withdrawal of approximately 300 gpm.

Well #6 is a 12-inch diameter well, which is approximately 261 feet deep. The well currently supplies water to two homes in the vicinity of the well field. The well was drilled in 1985 and is considered to be in good condition. This well does not have a well house or building. The well is centered in a large concrete pad and the control panel is located in a small building next to the well. A cyclone fence encompasses the perimeter of the concrete pad.

The overall condition of all eight wells is generally good. The combined well pumping capacity has dropped only slightly over the last ten years, with no major drops in production.

Wells Outside the Well Field

The City also has five other wells spread throughout the water service area. Two wells, Wells #8 and #8.1, are located within Lincoln Park, close to Reservoir #4. One well, Well #7, is located about one-half mile west of Reservoir #4, and the other two wells, Wells #9 and #10, are located in the 440-zone, south of H Street and west of Harvey Road. All of these wells are drilled into the shallow aquifer and each of these wells is further described below.

Well #7 is a small well located on 12th Street just north of H Street. The well is 247 feet deep with a 12-inch diameter casing. The well is enclosed and housed in a small well house. The well house also houses BPS #1; however, this pump station has not been used regularly for over ten years. The well is set up to provide water directly into the system. The well was drilled in 1929 but is still considered to be in good condition. The well has had a history of high hydrogen sulfide levels, which have produced odor complaints from customers. Therefore, this source is only used during peak demands when absolutely needed.

Well #8 is a single well located in Lincoln Park. The well is 200 feet deep with a 12-inch diameter casing. The well is enclosed in fenced area. The well is considered to be in good condition. This well has higher levels of manganese and arsenic compared to the other wells and is used only when absolutely needed.

Well #8.1 is a single well that was drilled in Lincoln Park in the summer of 2007. The well was drilled 760 feet deep with a 12-inch diameter casing. The water quality is assumed to be good as its source is the deep aquifer. Analysis of a single water sample collected at the time of well testing indicated an arsenic level of 10 ppb, matching the federal MCL. If arsenic levels are too high a blending program will be the first option reviewed followed by consideration of treatment if necessary. Design for the pump and piping system of this well will begin in 2010 and work on source approval by DOH will be concurrently initiated. To gain approval from DOH the information per WAC 246-290-130 must be forwarded to DOH along with the project report and construction submittals. Additionally, Well #8.1 will need to be associated with the water rights for Well #7 and #8 as discussed in Chapter 4.

Well #9 is a single well located east of the City on Boblett Street. The well is 303 feet deep with a 12-inch diameter casing. This well does not have a well house or building. The well is undeveloped at this time; however, it is scheduled to be brought on-line in 2010. This well also requires approval from DOH in terms of the submission of the same documents as outlined for Well #8.1. Design and document preparation has been started.

Well #10 is a single well that is also located east of the City on Boblett Street. The well is 158 feet deep with a 8-inch diameter casing. The well was originally drilled as a monitoring well and is not currently equipped with a pump. In addition, there is no well house or building housing this well.

Due to undesirable aesthetic properties in the water from Wells #7 and #8, these wells have been only activated during the high-use "demand season" of each year. This demand season generally starts in mid-May and runs until September or October. When activated, the wells are manually operated.

Additional information on the wells and well pumps can be found in Appendix F and a summary of the City's water rights is presented in Chapter 4.

Source Capacity Analysis

When reviewing the adequacy of the City's sources, the two issues that must be addressed are the physical capabilities of the City's sources and the withdrawal amounts allowed under the City's existing water rights. Physical source capacity is discussed below and the water rights assessment is presented in Chapter 4.

The City currently has ten wells capable of a combined well pumping capacity of 2,573 gpm or approximately 3.71 MGD. With the completion of Wells #9 and #8.1 (planned for 2010 and 2011, respectively), the City will have a total well pumping capacity of 3,050 gpm or 4.39 MGD. These improvements will fully utilize existing water rights. Wells #7 and #8 would be used only as needed, with Well #8.1 capable of providing the full capacity allowed by rights for all three wells.

The present well pumping capacity of 2,573 gpm is not adequate to meet the forecast 2009 MDD of 2,712 gpm. Therefore, equalizing storage has been and will be required to meet MDD demands. Therefore, the volume of ES required is presently greater than that normally required to make up the difference between MDD and PHD. However, once Wells #9 and #8.1 are brought on-line, the City's enhanced pumping capacity of 3,050 gpm is projected to meet the system wide MDD through the year 2013.

It should be noted that the stated well pump capacities presumes continuous pumping of every well at full capacity. This is considered unrealistic in terms of the possibility of well down time and/or equipment failure, etc. Therefore, due to the fact that the City's current MDD is essentially larger than the current well capacity, and that the City's current equalizing storage volumes are inadequate in some areas; the urgency for the City to bring additional wells on-line and to secure additional water rights is very evident. Once Well #8.1 is placed in service, the system will have some flexibility with the use of Wells #7, #8 and/or #8.1, within the combined limit of the water rights for these three wells. As described in Chapter 4, the City is working on water rights applications with Birch Bay Water and Sewer District. Securing those rights in the near future will provide reliability for water supply, allowing the City to meet demand without significant facilities in service at critical times, if necessary. In addition to the City wells discussed above, the District's well PW-2 (or 2D as listed in Chapter 4) is potentially available to the City through the First Amendment to Water Supply Agreement between the purveyors. As soon as the water rights are obtained for Wells #1R, #2, #5.1 and #2D, the City and District should plan to complete and

place in service all additional capacity as a reliability measure, in advance of the timing necessary to meet water demand system wide.

In summary, the current MDD is not being met by source capacity and, therefore, surplus storage volumes in the form of significant operating storage volume, are being depleted during days of maximum demand. In comparing the projected MDD demands depicted in Tables 2.8, 2.9 and 2.10, the City has reached the time where source capacity must be increased to meet demands. Therefore, the need to bring additional wells on-line and achieve the approval of additional water rights is considered a top priority.

As described in Chapter 4, the City is working with Birch Bay Water and Sewer District to secure approval from DOE for additional water rights. Following approval of additional rights, the capacity of Wells #2 and 5.1 can be increased and the City and District can plan to bring District Well PW-2 online for the benefit of both systems. Additional water supply projects will be necessary within the 20 year planning period.

3.3.2 Water Treatment

As described in Section 3.2, the City performs all water quality monitoring of the water supply, storage and distribution system. Currently the City operates a gas chlorine disinfection system to disinfect the source water. The system is located in a concrete block building within the well field. The system is connected to the 16-inch distribution pipe, which gravity flows from the chlorination building to Reservoir #1. The chlorine injection system is manually operated by City staff who monitor the residual levels in the reservoir and in the distribution system. On average, the residual levels in the reservoir are maintained from 0.6 to 2.0 mg/l. Currently the system can produce approximately 50 lbs/day of solution. City staff has indicated the system appears to be close to capacity during peak days. The system is described as fair to good condition. In addition, the electrical controls for Wells #1, #2 and #3 are located in the other half the chlorination building. Although a wall separates the equipment, the corrosive environment created by the chlorine is causing deterioration of the electrical controls.

Water from Wells #6, #7 and #8 do not receive treatment; however, water from Well #6 is closely monitored and water from Wells #7 and #8 is blended with water that has received treatment. In addition, there is a chlorine injection system on the Semiahmoo Spit, which is used to increases the residual levels of the water used within the western portion of the system.

3.3.3 *Storage*

The City operates five storage reservoirs located throughout the water service area. Four of the reservoirs are steel standpipes and one is a buried concrete tank with an exposed concrete dome roof. All of the storage reservoir levels are

remotely read with the exception of Reservoir #1. Each reservoir is further discussed below.

Reservoir #1 is a 1.0 million gallon buried concrete tank with an exposed dome roof. The reservoir was constructed in 1959 and is located within the City's well field. The reservoir is 90 feet in diameter with a base elevation of 150 feet and an overflow elevation of 171 feet. The reservoir acts as an equalizing reservoir for the wells within the well field, provides disinfection contact time, and provides storage for the 171-zone.

Although it is 50 years old, the condition of this reservoir is considered to be good and there are no known leaks. In the past, there have been discussions in regard to cleaning and coating the entire interior and the exterior of the roof; however, this has not occurred. The interior of this reservoir is on an annual cleaning schedule. There are currently no telemetry monitoring or controls in this reservoir. Manual operation of the wells is used to fill and maintain reservoir levels. At this time, the inlet valves to the reservoir are extremely deep and one of the valves needs to be replaced as it cannot be fully closed. The excess depth of the valves is due to the inlet pipe being extremely deep at the reservoir site.

Reservoir #2 is a steel standpipe, is located on E Street and was constructed in 1968. The 103,000-gallon reservoir is 27-foot in diameter, has a base elevation of 296 feet and an overflow elevation of 320 feet. The Lincoln Park BPS #5 supplies water to the 320-zone and this reservoir. When the reservoir level drops to the predetermined low water level, the telemetry system in this reservoir activates the pumps in BPS #5. The reservoir provides storage for the 320-zone and supplies water to BPS #2, which supplies the 440-zone.

The general condition of this reservoir is good. The interior and exterior were painted in 2009. In addition, the reservoir drainpipe needs to be relocated to provide proper day-lighting for the pipe. This is planned in conjunction with a future roadway improvement project. The cleaning schedule for this reservoir is every couple of years.

Reservoir #3 is a steel standpipe, is located on Semiahmoo Parkway and was constructed in 1985. The 1.0 million gallon reservoir is 44 feet in diameter, has a base elevation of 242 feet and an overflow elevation of 330 feet. The reservoir is fed by the Semiahmoo Spit BPS #3 and is the only water storage reservoir within West Blaine. When the reservoir level drops to the predetermined low water level, the telemetry system in this reservoir activates the pumps in BPS #3. The reservoir provides storage for the 330-zone and supplies the City's existing 360-zone through BPS #4. There is no storage reservoir within the 360-zone.

The general condition of this reservoir is excellent; however, it is close to requiring exterior painting. It has been well maintained with a two-year interior cleaning schedule. The last cleaning was in 2006 and is scheduled for cleaning again in 2010.

Reservoir #4 is a steel standpipe, is located in Lincoln Park and was constructed in 1990. The 1.3 million gallon reservoir is 80 feet in diameter, has a base elevation of 135 feet and an overflow elevation of 171 feet. The reservoir is fed by the 171-zone. In addition, Well #8 provides water directly to this reservoir.

The general condition of this reservoir is good. It has been well maintained and is scheduled for interior cleaning every other year. It was cleaned and the exterior was repainted in the fall of 2007.

Reservoir #5 is a steel standpipe, is located on Harvey Road and was constructed in 1992. The 1.18 million gallon reservoir is 50 feet in diameter, has a base elevation of 360 feet and an overflow elevation of 440 feet. The reservoir is fed by BPS #2 and provides storage to the 440-zone. When the reservoir level drops to the predetermined low water level, the telemetry system in this reservoir activates the pumps in BPS #2.

The general condition of this reservoir is excellent. It has been well maintained and is scheduled for interior cleaning every other year. The needs of this reservoir included general exterior cleaning.

Reservoirs #3, 4 and 5 each have a single combined inlet/outlet pipe. Although there have been no water quality problems to date, the City is concerned about water circulation in each tank. Work at each reservoir is proposed to induce mixing within each reservoir.

A summary of the City's reservoirs is presented in Table 3.4.

Storage Capacity Analysis

The water storage requirements for the City are described in the following sections. For comparison, two separate storage capacity analyses were performed for this report. The first analysis considered all connections within the City and the subsequent storage requirements of the system as a whole. The second analysis reviews the storage requirements and storage volumes available within the independent pressure zones. These are summarized in the tables that follow each discussion.

Where applicable, equations from the DOH Design Manual were used to determine the required storage capacities. The relative storage equations are further detailed in Section 3.1.6 of this plan. Each element of storage as it applies to the City is detailed and quantified below.

TABLE 3.4
City of Blaine
Existing Reservoir Data

	Res-1	*Res-2*	*Res-3*	*Res-4*	*Res-5*
Location	Well field	E Street	Semiahmoo Parkway	Lincoln Park	Harvey Road
Diameter (ft)	90	27	44	80	50
Capacity (gal)	998,793	102,733	1,000,367	1,315,283	1,174,360
Base elevation (feet above MSL)	150	296	242	135	360
Overflow Elevation (feet above MSL)	171	320	330	171	440
Low Water Operation Level	157	306	312	157	430
Type	Buried concrete with exposed dome roof	Steel standpipe	Steel Standpipe	Steel Standpipe	Steel Standpipe
Supplied by	Well field wells	Lincoln Park BPS #5	Semiahmoo Spit BPS #3	171 zone and Well #8	D Street BPS #2
Storage for/ Purpose	Provides water storage for 171-zone & Equalizing for well field wells. Provides disinfection CT.	Provides water storage for 320- zone	Provides water storage for 330 & 360-zones	Provides in-city storage for 171-zone	Provides water storage for 440-zone
Year Constructed	1959	1968	1985	1990	1992

Operational storage (OS) is defined as the volume of water available to meet system demands when water is not being supplied by the system's sources. There is no required amount of OS by regulation; however, system restrictions such as those imposed by pump capabilities often dictate the need for OS. In the City's case, the majority of the reservoirs are operated with significant draw down before the pumps are called to refill the reservoirs. This method of operation results in significant OS components. The required storage capacities and the projected deficiencies in storage as presented in this section relate to the current method of operation. However, additional review is recommend in regard to reducing the amount of operational draw down. The effect of reducing the amount of draw down relates directly to the required amount of OS.

Equalizing storage (ES) is supplemental storage, which is utilized when system demands are higher than the source capacity. The amount of ES generally increases each year as the system expands. Equation 9-1 from the DOH Design

Manual was used to determine the ES volumes of the system for each planning year.

Standby Storage (SB) volumes are determined as two days' worth of the ADD per ERU, for each ERU within the system, when considering a single source system. A multiple source system considers the same quantity minus the source capacity of the largest source. As a whole, the City is considered a multiple source system and the values presented in Table 3.5 have been calculated as such. However, the independent review of pressure zones considered the single source/dual source characteristics of each zone. Equation 9-3 from the DOH Design Manual was used to determine the system wide SB requirements and the individual zone SB requirements.

Standby storage volumes also generally increase each year as the system expands and daily demands increase. In addition, when source capacities are large enough, the required SB volume, as determined by the applicable DOH equation, can be zero. However, a value of 200 gallons per day per ERU is recommended by DOH. This recommendation is discussed in more detail below.

Fire Suppression Storage (FSS) is a function of the volume and the duration of a required fire flow. As described in Section 3.1.7, a conservative rate and duration of 1000 gpm for 60 minutes has been selected. Therefore, the required amount of fire flow storage is as follows.

FSS Volume = 1000 gpm x 60 min. = 60,000 gallons

This volume has been applied to all pressure zones except the existing 360-zone. There is no storage within this zone; therefore, a single FSS volume of 60,000 gallons within Reservoir #3 is assumed to be available to either the 330-zone or the 360-zone. The resulting city-wide component of FSS is 240,000 gallons until the new 630-pressure zone is created. The creation of this zone, which is expected to be completed no sooner than the year 2011, will increase the total FSS to 300,000 gallons. These storage volumes apply to the system-wide evaluation as well as the independent zone evaluation.

Dead Storage (DS) describes a volume of stored water that is not available for use within the water system. However, there can be two definitions of water that is not available to the system. One may describe water that is below the outlet of a storage facility and cannot be physically drained from the facility; the other may define the water in a storage facility that must be retained in order to provide minimum service pressure. In the case of the City's system, this determination can be complicated as water that is considered dead storage in one zone could possibly be usable storage when transferred to a lower zone. However, under normal operational procedures, the City's components of dead storage relate to water which cannot be withdrawn due to the required HGL within a zone. Therefore, there are no components of dead storage that are considered usable to a lower zone.

System-Wide Analysis

Using the previously detailed equations, the summation of the City's existing and required storage volumes is provided in Table 3.5. This table is the result of inputting the City's total number of connections into the DOH formulas and then comparing the required storage volumes to all of the City's storage capacities as a combined total.

The results of the system-wide analysis indicate the City, as a whole, is currently deficient in storage volumes and remains so through the planning year 2029. This is true even with the construction of a new 630-zone reservoir in the year 2011. As shown in the table, the City has a volume deficiency of 215,618 gallons in 2009 and a volume deficiency of 114,143 gallons through the year 2029. These figures assume that fire flow volumes are not nested within standby storage volumes, as standby volumes are not required when considering the City's system as a whole.

However, as indicated above, this analysis considers the City's storage resources as a whole which assumes storage volumes can be utilized anywhere within the service area. This is a short-sighted assumption as there are limitations in moving water around the service area that are created by the layout of the pipe network and the existence of multiple pressures zones.

Independent Pressure Zone Analysis

The alternative to applying the storage requirements to the City as a whole is a more detailed analysis that considers the demands and storage needs of each pressure zone or a combination of zones utilizing individual reservoirs. This analysis ensures adequate volumes of water are truly available to zones that may not be able to make use of the surplus storage volumes that are located elsewhere in the City. The detailed zone analysis considers factors such as the capacity of the sources supplying the zone, the customer demands specific to each zone, the demands of any upper zone, the capacities of the pump stations supplying the upper zones, the availability of fire flow volumes and the possibility of the manual transfer of water from zone to zone to meet the SB needs of the system. It should be noted that there are no storage volumes held to meet the peak demands of the City's two large wholesale customers. It is assumed that the required storage volumes for these systems are provided by their internal storage facilities owned and maintained by those purveyors. Therefore, the ERU value used in the calculation of SB volumes does not include the ERUs related to wholesale customers.

Each of the City's pressure zones was further reviewed in the second analysis. These zones are the 171-zone, the 320-zone, the 440-zone, the 630-zone and the 330/360-zone. The demands of the existing 360-zone were considered in the evaluation of the 330-zone, as Reservoir #3 serves both zones. The analysis for each zone is presented below and the results are summarized in Tables 3.6 and 3.7. The City's pressure zones are illustrated in Figure 3.2.

TABLE 3.5
City of Blaine
Storage Capacity Analysis

Required Storage Volumes Considering City System as a Whole (gallons)

	2009	2014	2019	2024	2029
Total Required Storage Volumes					
Operational Storage	1,603,323	1,629,746	1,629,746	1,629,746	1,629,746
Equalizing Storage	0	0	0	0	0
Standby Storage	0	0	0	0	0
*Fire Suppression Storage	240,000	300,000	300,000	300,000	300,000
Total Required Storage	1,843,323	1,929,746	1,929,746	1,929,746	1,929,746
Available Storage Volumes					
Service Volume at 30 psi+	1,627,705	1,815,603	1,815,603	1,815,603	1,815,603
*FF Volume at 29 - 20 psi	499,981	540,651	540,651	540,651	540,651
Available Storage Volumes					
Service - Surplus/(Deficit)	(216,618)	(114,143)	(114,143)	(114,143)	(114,143)

*Value represents 60,000 within each zone, excluding the 360 zone.
Excess fire flow volumes cannot erase deficit in required storage volume over 30 psi.

171-zone

The 171-zone is the City's largest zone, which contains the well field and most of the wells. The level of the reservoirs "float" on the HGL of the 171-zone as the zone is fed by gravity from the two 171-zone reservoirs. Supply to the 320-zone and the 330-zone service comes directly from the 171-zone. In addition, the two primary points service point to the BBWSD and the only service point to the Bell Bay Jackson Water Association are within the 171-zone. Currently, draw down

in the 171 reservoirs is restricted by existing customer connections at elevations that barely receive 30-psi when the reservoirs are full. The City is aware of this deficiency and plans to construct a booster station to correct the deficiency. Storage values for the 171-zone, represented in Tables 3.6 and 3.7, reflect the construction of this booster station, thus allowing the 171-zone reservoirs to accommodate usable storage volumes, as draw down in the reservoir will then be possible.

The current operation of the reservoirs in this zone results in an operational storage component of just less than 1.2 million gallons. With multiple wells supplying this zone, the zone was evaluated under a dual source SB scenario using the loss of the largest production well. The large combined capacity of the wells results in a SB requirement of zero through the year 2029. A minimum SB volume is recommended by DOH, previously described in Section 3.1.6.C; however, the information in Table 3.6 assumes no SB storage component for this zone.

The required ES component is just over 119,000 gallons in 2009. By the year 2029 the ES requirement is 279,000 gallons. These values assume no additional wells are brought on-line. With Well #5.1 recently placed in service and the plan to place Well #8.1 on-line in the next two years, the required ES volume drops to zero in 2010 and remains at zero until the year 2019. This is due to the increase in capacity resulting from the addition of the wells. Fire flow volumes for this zone, and all other zones, is 60,000 per zone. When comparing the 171-zone's available storage volumes to the required volumes, the zone is approximately 190,000 gallons deficient in storage in 2009. This includes nesting the fire flow volume of 60,000 within the SB volume. By the year 2029 the deficiency is 604,758 gallons. These deficient volumes are mostly the result of the large amount of OS currently utilized within this zone.

However, once the City completes the construction and connection of Wells #5.1 and #8.1, and after the applicable water rights are received which allow for full use of the wells, the storage volumes in the 171-zone become positive. This also assumes that minor reductions (2 feet) in OS volumes are achievable. The City is currently relying on 14 feet of OS and any further reduction in this volume requirement will result in a direct increase in the available storage to meet other requirements.

320-zone

To the east, the 320-zone draws from the 171-zone. The 320-zone also supplies BPS #2, which pumps to the 440-zone. In addition, the future 630-zone will be supplied by the 440-zone. Therefore, the calculation of the demands for these zones includes considerations of the demands from each of the upper zones. The 320-zone is a dual source zone fed by pumps within BPS #1 and #5. The City currently does not operate BPS #1; however, the station can be used in emergency situations, such as a loss of production at BPS #5.

The operational component of this zone is just less than 60,000 gallons. Due to the dual source classification and the low ERU count within the zone, both SB and ES requirements from 2009 to 2029 are zero. Again, SB volumes may be greater than zero if the City elects to hold additional SB volumes. The required volumes for this zone compared to the available volumes equates to a surplus of just less than 43,000 gallons through the 20-year planning period.

440-zone

Continuing to the east, the 440-zone is a rural zone, which draws from the 320-zone. At this time, the zone is single source zone because it is only supplied by BPS #2. However, the City's plans to bring Well #9 on-line and pump the water directly into the 440-zone, thus, the zone will become dual source. This will increase the source capacity into the zone and reduce the required SB volumes.

At this time, the 440-zone reservoir is deficient in storage by just over 74,000 gallons. This is due in part to the large component of OS. Much of this operational volume is used at this time to maintain water quality in the reservoir. Therefore, if operational volumes were reduced by 50% today, the overall storage volumes in this zone would equal a surplus of 84,000 gallons. In addition, the connection of Well #9 creates surplus water in the zone by reducing the required SB volumes due to the dual source classification.

Furthermore, the creation of the 630-zone to meet the demands of growth within the eastern part of the City's recently annexed area will eventually reduce the demands on the 440-zone. This is due to the transfer of land and existing customers from the 440-zone into the 630-zone.

Currently, the operational component of the 440-zone is just less than 147,000 gallons. As with the 320-zone, the large source capacity and the low ERU count within the zone results in an ES requirement of zero from 2009 to 2029. However, due to the single source classification, the SB requirements are approximately 84,000 gallons in 2009 and 88,000 in 2010. The 630-zone is projected to be completed in the year 2011. This reduces the 440-zone SB volume to just over 45,000 in 2011 and then it rises to just over 90,000 in 2029. Under these scenarios, the zone is deficient in storage by just over 74,000 gallons in 2009 and just over 79,000 in 2029. Assuming that in the future OS volumes can be reduced and Well #9 is brought on-line, the required storage volumes for this zone would be less than what is currently available. Thus, under these assumptions, there would be a surplus of 84,000 gallons in 2009 and 84,000 gallons in 2029.

330-zone

To the west, the 330-zone draws from the 171-zone through a single pump station. Water from the 330-zone reservoir is supplied to the 360-zone through a single pump station. The 330-zone also contains a small service connection to the BBWSD. Although there are two pumps within the 330-zone booster station,

the station is served by a long pipe run which travels under Drayton Harbor. Because the long pipe run is the only source to the 330/360-zones the SB evaluation has been calculated as single source zone. It should also be noted that a recent analysis of the demands for this zone indicates the ADD for this zone is much larger than the average across the system. Therefore, a more conservative ADD of 268 gal/day/ERU was used in the calculation of the 330/360-zones storage volumes. Supply to the Semiahmoo Golf course was not considered in sizing of storage in this zone.

The OS component of these zones is just over 204,000 gallons. Due to the single source classification, the SB requirement in 2009 is approximately 327,000 gallons and approximately 484,000 gallons in 2029. The required ES volumes are zero from 2009 to 2029.

The required volumes of this zone compared to the available volumes equates to a deficiency of approximately 285,000 gallons in 2009 and approximately 468,000 in 2029. Again, this includes nesting the fire flow volume of 60,000 within the SB volume.

630-zone

The remaining zone in this analysis is the proposed 630-zone, which will be created to supply development in the northeastern corner of the City. A review of the needs for this area can be found in the City's *"East Blaine Subarea Infrastructure Plan for Streets, Water, Sewer and Stormwater"* dated June 2007. The portion of this draft infrastructure plan pertaining to the water system is included in Appendix G of this document. The creation of the 630-zone is described in this document as a necessary infrastructure element to supply water to East Blaine due to the higher elevations that cannot be served by the 440-zone. The plan calls for a new booster station at the 440-reservoir site and a standpipe constructed on the highpoint located at the east end of the service area. Due to unknowns in regard to the design of the station, the exact size, height and HGL of the reservoir are not given. An example HGL of 630 feet provides for a 100-ft tall standpipe with approximately 20 feet of usable storage.

The above referenced HGL and standpipe height were used for this storage evaluation. An estimated booster station capacity of 1,100 gpm was also selected. To meet the projected demands of the year 2029, a tank 30 feet in diameter and 100 feet tall was selected. It is recommended these assumptions be reevaluated once the booster station capacity and exact tank location are determined. Using these assumptions along with an assumed OS depth of 5 feet, the operational component for this zone equates to approximately 26,500 gallons. The required ES and SB volumes are zero due to the large capacity of the booster station. As an independent zone, 60,000 gallons of fire flow storage are required. The combined requirements equate to a storage surplus of just over 79,000 gallons from 2011 to 2029.

Considering the detailed independent pressure zone analyses described above, the summation of the City's existing and required storage volumes is provided in Table 3.6.

The City's completion of the additional wells currently under construction and as planned for, results in a reduction in the required storage volumes as additional source capacity is brought into the equations. When this increase in capacity is coupled with changes in operational procedures, it is forecasted that the City can achieve even further reductions in the required storage volumes. The summation of the City's existing and required storage volumes considering the completion of wells and changes in operation procedures is provided in Table 3.7.

TABLE 3.6
City of Blaine
Storage Capacity Analysis

Required Storage Volumes Considering Independent Pressure Zones and No Additional Wells
(gallons)

	2009	*2014*	*2019*	*2024*	*2029*
171-Zone					
Available Storage Volumes	1,121,220	1,121,220	1,121,220	1,121,220	1,121,220
Total Required Storage	1,310,999	1,397,745	1,490,915	1,603,049	1,725,978
Service - Surplus/(Deficit)	(189,779)	(276,525)	(369,695)	(481,829)	(604,758)
320-Zone					
Available Storage Volumes	102,733	102,733	102,733	102,733	102,733
Total Required Storage	59,928	59,928	59,928	59,928	59,928
Service - Surplus/(Deficit)	42,805	42,805	42,805	42,805	42,805
440-Zone					
Available Storage Volumes	157,071	157,071	157,071	157,071	157,071
Total Required Storage	231,263	197,894	208,385	221,263	236,858
Service - Surplus/(Deficit)	(74,193)	(40,823)	(51,314)	(64,192)	(79,787)
330/360-Zone					
Available Storage Volumes	246,681	246,681	246,681	246,681	246,681
Total Required Storage	532,116	633,142	659,084	686,401	714,945
Service - Surplus/(Deficit)	(285,435)	(386,461)	(412,402)	(439,720)	(468,264)

*Value represents 60,000 within each zone, excluding the 360 zone.
Excess fire flow volumes cannot erase deficit in required storage volume over 30 psi.

TABLE 3.7
City of Blaine
Storage Capacity Analysis

Required Storage Volumes Considering Independent Pressure Zones With Additional Wells and Corresponding Reduction in Operational Storage Volumes (gallons)

	2009	2014	2019	2024	2029
171-Zone					
Available Storage Volumes	1,121,220	1,121,220	1,121,220	1,121,220	1,121,220
Total Required Storage	800,152	631,899	725,069	837,203	960,131
Service - Surplus/(Deficit)	321,068	489,322	396,151	284,018	161,089
320-Zone					
Available Storage Volumes	102,733	102,733	102,733	102,733	102,733
Total Required Storage	59,928	59,928	59,928	59,928	59,928
Service - Surplus/(Deficit)	42,805	42,805	42,805	42,805	42,805
440-Zone					
Available Storage Volumes	157,071	157,071	157,071	157,071	157,071
Total Required Storage	73,400	73,400	73,400	73,400	73,400
Service - Surplus/(Deficit)	83,671	83,671	83,671	83,671	83,671
330/360 Zone					
Available Storage Volumes	246,681	246,681	246,681	246,681	246,681
Total Required Storage	532,116	633,142	659,084	686,401	714,945
Service - Surplus/(Deficit)	(285,435)	(386,461)	(412,402)	(439,720)	(468,264)

*Value represents 60,000 within each zone, excluding the 360 zone.
Excess fire flow volumes cannot erase deficit in required storage volume over 30 psi.

In summary, and as illustrated in Tables 3.6 and 3.7, the City's storage within the 171, 440 and 330/360 zones is currently deficient and storage in the 320-zone is near capacity. However, with the completion of additional wells and changes in operational procedures is projected that the City can eliminate the deficiencies in all zones except the 330/360 zones. More detailed information in regard to the independent storage evaluations for each zone, including scenarios with and without new wells, is presented in Appendix H.

3.3.4 *Telemetry*

The City's existing telemetry systems are essentially simple pump-call systems and reservoir level monitoring systems. Currently there are pressure transducers in Reservoirs #2 and #3 that provide signals to activate the pumps in BPS #5 and #3 respectively. There is also pump telemetry in Reservoir #5, which activates the pumps in BPS #2. At this time, none of the reservoirs in the 171-zone have pump call telemetry. The wells are manually operated to meet the demands of the 171-zone and to keep the 171-zone reservoirs full. In addition to pump call systems, the City has water level sensors that provide reservoir level information on all reservoirs except Reservoir #1. These levels can be monitored from the City's Public Works building.

In addition to reservoir level and pump calls the City has various telemetry systems which indicate low/high level alarms, communication failures and pump failures. These various alarms activate the on-call dialer system, which calls the Operations Supervisor or the person designated as the first respondent. An additional component of system notification is an automated system that notifies the Operations Supervisor, or the person designated as the first respondent, in the event of the failure of the PRV at the Semiahmoo Resort.

Aside from the City's systems, the U.S. Border Patrol electronically monitors the City's reservoirs for unauthorized entry. Should this occur, the City of Blaine Police Department notifies the Operations Supervisor or the person designated as the first respondent

3.3.5 *Distribution System*

General Description

The City's distribution system is made up of five pressure zones extending from the western portion of the Semiahmoo Spit area to the eastern boundary of the City's service area. A sixth zone is proposed to serve development in the northeast corner of the City. Each of these zones is illustrated in Figure 3.1. Water is generally pumped from the City's wells to the storage reservoirs located in the 171-pressure zone. Water is then supplied by booster pump stations to the remaining pressure zones. A schematic drawing of the City's system is provided in Figure 3.2 and a more detailed description of the operations in each zone is included below.

The 171-zone is the City's largest zone and includes Wells #1R, #2, #3R, #4, #4.1, #5, #5.1, #8 and #6 and storage in Reservoirs #1 and #4. Water passes from this zone to the four upper zones in the City via booster pump stations. There are two pressure-reducing valves at BPS #5 that allow flow from the 320-zone back to the 171-zone. This zone also contains the two primary service points to BBWSD and the only service point to the Bell Bay Jackson Water Association.

From the 171-zone, the first upper zone to the east is the 320-zone, serving the area directly east of the downtown core and extending east of the truck route border crossing. This zone is fed by the 171-zone through BPS #5 and #1. It can also be back-fed from the 440-zone through two pressure reducing valves. The 320-zone supplies the 440-zone via BPS #5. Reservoir #2 is the storage reservoir for this zone; however, the reservoir is located outside the zone in the upper 440-zone. This is beneficial as it allows the reservoir to be drawn down without affecting the service pressure to the customers in the 320-zone.

The 440-zone is the City's current highest zone located at the eastern edge of the City's service area. Water is supplied to this zone from the 320-zone through BPS #2. This zone can back-feed into the 320-zone should the demands in the 320-zone create a low-pressure situation. Reservoir #5 provides storage for this zone and is located within the zone.

The 330-zone is the smallest zone in the City and includes Semiahmoo Spit and the lower areas of the Semiahmoo development. This zone is fed by the 171-zone through a pipeline buried under Drayton Harbor that supplies BPS #3. This booster station is located on the northern tip of Semiahmoo Spit. This zone also supplies the 360-zone through BPS #4R, and it contains the smaller service connection to the BBWSD. There is also a pressure-sustaining valve between the 330-zone and the 360-zone that allows water to flow back into the 360-zone should the pressure in this zone drop.

The remaining zone in the City is the 360-zone. This zone serves the upper areas of the Semiahmoo development where residents are above an elevation 239 feet. There is no storage reservoir in this zone and the zone is fed from the 330-zone through BPS #4R. Recent engineering evaluations place the HGL of this zone closer to 400 feet rather than 360. However, at this time the zone is still referred to as the 360-zone.

The facilities and basic characteristics of each pressure zone are summarized on the following pages in Tables 3.8 through 3.12.

TABLE 3.8
City of Blaine
Summary of 171 Pressure Zone

General

Item	*Description*
Area served / general description	Approximately 6.02 sq. miles, including the City's well field, areas southeast of the city, central and all of downtown Blaine. Zone supplies three booster pump stations and both wholesale purveyors; Birch Bay Water and Sewer District and Bell Bay Jackson Water Association
Estimated number of ERUs	Approximately 2,634 ERUs with a mixture of residential, commercial/industrial and public agency
Elevation range within area	10 ft. to 140 ft. above mean sea level.
Zone fed by	Multiple wells within zone
Zone supplies	BPS #1 (320-zone), BPS #5 (320-zone), BPS #3 (330-zone)
Future expansion	Infill within zone

Facility Inventory

Item	*Facility*	*Location*	*Description*
Source of Supply	Wells #1R, #2, #3R, #4, #4.1, #5.1, #6	Well Field	See Section 3.1.1
	Well #7	12th St. at G. St.	
	Well #8	Lincoln Park	
Booster Pump Stations	BPS #1 (320-zone),	12th St. at G. St.	225 gpm capacity
	BPS #5 (320-zone),	Lincoln Park	500 gpm capacity
	BPS #3 (330-zone)	Semiahmoo Spit	800 gpm capacity
Storage within zone	Reservoir #1	Well Field	1,000,000 gal
	Reservoir #4	Lincoln Park	1,300,000 gal
Pressure reducing valves	Semiahmoo Spit – PRV	Next to Booster Pump Station #2	Regulates water from the 330-zone into the water system for the marina
	Lincoln Park - PRV	In Lincoln Park BPS #5	Regulates water from the 320-zone to the 171-zone.
Transmission / Distribution system	Approximately 2.5 miles of 16-inch, 1.2 miles of 14-inch, 8.3 miles of 12-inch, 29.9 miles of 10-inch and smaller mains.	Main transmission from watershed into core area of City	
Special considerations	1,300' harbor crossing from downtown to spit on West Blaine	Blaine Marina to Semiahmoo Spit	

TABLE 3.9
City of Blaine
Summary of 320 Pressure Zone

General

Item	*Description*
Area served / general description	Approximately 455 acres directly east of the downtown region around the truck route border crossing. Zone supplies one booster pump station.
Estimated number of ERUs	Approximately 627 ERUs, mostly residential with some commercial and public agency
Elevation range within area	60 ft. to 210 ft. above mean sea level.
Zone fed by	171-zone (BPS #1 & BPS #5)
Zone supplies	BPS #2 (440-zone)
Future expansion	Infill within zone

Facility Inventory

Item	*Facility*	*Location*	*Description*
Source of Supply	BPS #1	12th St. at G. St.	225 gpm capacity
	BPS #5	Lincoln Park	500 gpm capacity
Booster Pump Stations	BPS #2 (440-zone)	D Street, north of Lincoln Pk.	250 gpm capacity
Storage within zone	Reservoir #2	E Street	100,000 gal
Pressure reducing valves	Lincoln Park - PRV	In Lincoln Park Pump Station #5	Regulates water from the 320-zone to the 171-zone.
	E Street PRV	At Reservoir #2	Regulates water from the 440-zone to the 320-zone
	H Street PRV.	South of Lincoln Ln.	Regulates water from the 440-zone to the 320-zone
Transmission / Distribution system	Approximately 1.9 miles of 12-inch, 0.5 miles of 10-inch, 8.6 miles of 8-inch and smaller mains	General distribution system supplying zone	

TABLE 3.10
City of Blaine
Summary of 440 Pressure Zone

General

Item	*Description*
Area served / general description	Approximately 960 acres serving the higher, northeastern elevations of East Blaine up to the western boundary of the newly annexed areas
Estimated number of ERUs	Approximately 208 ERUs mostly all residential
Elevation range within area	80 ft. to 365 ft. above mean sea level.
Zone fed by	320-zone (BPS #2)
Zone supplies	Will supply future 630 zone
Future expansion	Infill within zone

Facility Inventory

Item	*Facility*	*Location*	*Description*
Source of Supply	BPS #2	D Street North of Lincoln Pk.	250 gpm capacity
Booster Pump Stations	N/A		
Storage within zone	Reservoir #5	East of Harvey Road	1,175,000 gal
Pressure reducing valves	E Street PRV	At Reservoir #2	Regulates water from the 440-zone to the 320-zone
	H Street PRV.	South of Lincoln Ln.	Regulates water from the 440-zone to the 320-zone
Transmission / Distribution system	Approximately 2.0 miles of 12-inch 6.1 miles of 8-inch and smaller mains	General distribution system supplying zone	

TABLE 3.11
City of Blaine
Summary of 330 Pressure Zone

General

Item	*Description*
Area served / general description	Approximately 675 acres serving Semiahmoo Spit and lower areas of the Semiahmoo development. Zone supplies one booster pump station.
Estimated number of ERUs	Approximately 200 ERUs mostly all residential with the exception of facilities serving the Semiahmoo Golf Course (Estimated to be about 1,136 ERU'S at continuous pumping rate of 300 gpm.)
Elevation range within area	10 ft. to 245 ft. above mean sea level.
Zone fed by	171-zone (BPS #3)
Zone supplies	BPS #4R (360-zone)
Future expansion	Infill within zone

Facility Inventory

Item	*Facility*	*Location*	*Description*
Source of Supply	BPS #3	Semiahmoo Spit	800 gpm capacity
Booster Pump Station	BPS #4R (360-zone)	Bald Eagle Drive	1,100 gpm capacity
Storage within zone	Reservoir #3	Semiahmoo Parkway	1,000,000 gal
Pressure reducing valves	Semiahmoo Spit	At BPS # 3	Regulates water from the 330-zone into the water system for the marina
Transmission / Distribution system	Approximately 1.3 miles of 14-inch, 2.4 miles of 12-inch, 0.9 miles of 10-inch, 5.64 miles of 8-inch and smaller mains	General distribution system supplying zone	Can provide water back into the City's 330 zone under emergency conditions. A temporary pump must be supplied
Special considerations	BBWSD Emergency Interties (two)	Horizons Drive and Semiahmoo Parkway.	

TABLE 3.12
City of Blaine
Summary of 360 Pressure Zone

General

Item	*Description*
Area served / general description	Approximately 290 acres serving the upper areas surrounding the Semiahmoo Golf Course
Estimated number of ERUs	Approximately 360 ERUs mostly all residential
Elevation range within area	200 ft. to 260 ft. above mean sea level.
Zone fed by	330-zone (BPS #4R)
Zone supplies	N/A
Future expansion	Infill within zone

Facility Inventory

Item	*Facility*	*Location*	*Description*
Source of Supply	BPS #4R	Bald Eagle Drive	1,100 gpm capacity
Booster Pump Station	N/A		
Storage within zone	N/A (shares storage with 330-zone)		
Pressure sustaining valve	Semiahmoo Golf Course - PSV	Semiahmoo Golf Course Club House.	Allows flow into 360-zone from 330-zone should pumps at BPS #4 fail.
Transmission / Distribution system	Approximately 1.2 miles of 10-inch 4.9 miles of 8-inch and smaller mains	General distribution system supplying zone	

Transmission / Distribution System

The major transmission of water from the City's well field to the core distribution system is via two transmission lines: a 16-inch line in Pipeline Road and a parallel 12-inch line in Sweet Road. Both of these lines operate within the 171 pressure zone. A connection on the 12-inch line, just east of the well field, also feeds to the south and southeast providing flow to the former Sweet Road Water Association and rural areas south of the UGA. An additional transmission line is the City's 14-inch pipeline that travels under Drayton Harbor from the Blaine Marina to the Semiahmoo spit. This main is a ductile iron main and is in need of

a cathodic protection system. The main connects the City's 171-zone to BPS #3 which feed the 330-zone.

Service to customers within the 171-zone is via a fairly well looped network encompassing the areas directly west of Interstate 5 and east of Interstate 5 to the truck route. Service to the upper eastern pressure zones is provided from the 171-zone through booster pump stations. Service to West Blaine is via a 14-inch main, which crosses under Drayton Harbor from the City's marina area to Semiahmoo Spit.

Distribution mains throughout the system consist of pipes ranging in size from 2-inch to 16-inch. Pipe materials include galvanized steel, copper, asbestos cement, cast iron, PVC, ductile iron and high density polyethylene. Pipes within the 171-zone consist of approximately 2.5 miles of 16-inch, 1.2 miles of 14-inch, 8.3 miles of 12-inch, and 29.9 miles of 10-inch and smaller mains.

Within the 320-zone, the system consists of approximately 1.9 miles of 12-inch, 0.5 miles of 10-inch, and 8.6 miles of 8-inch and smaller mains. The 440-zone includes the transmission and distribution mains consisting of approximately 2.0 miles of 12-inch and 6.1 miles of 8-inch and smaller mains. On the western side of the service area the 330-zone's transmission and distribution system consists of approximately 1.3 miles of 14-inch, 2.4 miles of 12-inch, 0.9 miles of 10-inch, and 5.64 miles of 8-inch and smaller mains. The smaller 360-zone includes approximately 1.2 miles of 10-inch and 4.9 miles of 8-inch and smaller mains.

For the most part the system is generally well looped with minimal dead-end lines. However, the system does include two long dead-end runs. One of these runs is a 6-inch pipeline within the 171-zone that serves the areas within the old Sweet Water Road Water Association. The other is a long 12-inch run that supplies the southern portion of the 320-zone.

The lowest static operating pressures in the City are in the 171-zone southeast of the well field. This area includes the old Sweet Water Road Water Association, which the City began to manage in 1992. Service pressures in this area are generally good aside from a small high point along Haynie Road, where system pressures are below the minimum levels of 30-psi.

The highest pressure in the service area is 150 psi. This pressure is at the end of a dead-end run extending south from the 440-zone. The highest pressure at a service connection is estimated to be 138 psi; however, the connection has a customer-owned pressure regulator, which reduces the pressure into the house.

As mentioned above, the system is generally looped; however, there are many short dead-end lines serving short dead-end roads. A general inventory of the City's distribution system is included in Section 1.4, and a map of the water system, including appurtenances, is included as Figure 3.1

Evidence from maintenance and routine inspections suggests that the overall system is in an acceptable condition, with isolated trouble spots. The majority of system repairs are conducted on radial breaks in the aging asbestos cement (AC) mains and leaks in older small lines with steel or galvanized connections.

The City's operations and system maintenance programs are generally simple in nature. The City's maintenance crews perform all system repairs and service line taps up to two inches. In addition, the staff reads the service meters and performs inspections of construction projects with water system related components.

All water system "as-built" records are kept by computer mapping and include the locations of all facilities, pipe sizes and hydrant and valve locations. Dates of installation for all new pipelines are also noted in the computer mapping.

Fire Hydrants

The City has fire hydrants throughout the City service area and the current adopted code requires a hydrant spacing of 500 feet in all areas. The City's fire hydrant coverage in the commercial/multi-family areas is adequate with much of the area overlapped by multiple hydrants. However, as with many older rural communities, there are portions of the rural areas that do not meet the current spacing requirements.

The City is fully aware of this situation and maintains close contact with the local fire jurisdiction. As with most rural areas, the local fire jurisdiction does not rely on water from hydrants as its first defense. Hydrants are generally used to supplement the water brought to the site by the fire department tender trucks.

Pressure Reducing Valves

The City has four pressure reducing valve (PRV) stations, which regulate pressures between zones. There is a PRV located in BPS #5 which allows water to flow from the 320-zone to the 171-zone. This PRV consists of a single 6-inch valve with no small bypass valve. Two additional PRV stations regulate pressure between the 440-zone and the 320-zone. These valves are located in vault structures and are each configured with a single 6-inch in-line valve and a smaller low flow valve. The final PRV is located in a vault at the end of the Semiahmoo Spit. This valve regulates the pressure delivered from the 330-zone to the marina area. This PRV was constructed in consideration of the age and type of pipe material used in the marina area. The valve and the pipe within the marina are privately owned; however, the City monitors the condition of the valve.

All of the valves are considered to be in good condition. Table 3.13 lists each of the City's PRV stations with their approximate operating pressures. The schematic provided as Figure 3.3 illustrates the relationship between the pressures zones. The condition of the PRV stations is generally good.

In addition to the PRV stations the City also has a pressure relief valve and a pressure-sustaining valve. These valves are set to open when pressures in the upper zone either exceed or fall below the set points. These valves and their set points are also illustrated in Table 3.13.

TABLE 3.13
City of Blaine
Pressure Regulating Valves

Pressure Reducing Valves	*Elev.*	*Inlet Pressure*	*Outlet Pressure*
BPS #5 PRV Regulates water from the 320-zone to the 171-zone	154	72	8
E Street PRV at Reservoir #2 Regulates water from the 440-zone to the 320-zone	306	58	8
H Street PRV south of Lincoln Ln. Regulates water from the 440-zone to the 320-zone	186	110	58
Semiahmoo Spit Regulates water from the 330-zone into the water system for the marina	10	140	40
Pressure Relief Valve	*Elev.*	*Normal Inlet Pressure*	*Relief Pressure*
Pressure relief valve to atmosphere at 360-zone at BPS #4. Regulates pressure in 360-zone should pumps fail to shut down.	250	65	100
Pressure Sustaining Valves	*Elev.*	*Inlet Pressure*	*Sustaining Pressure*
Pressure sustaining valve at Semiahmoo Golf Course Club House. Allows flow into 360-zone from 330-zone should pumps at BPS #4 fail.	225	75	30

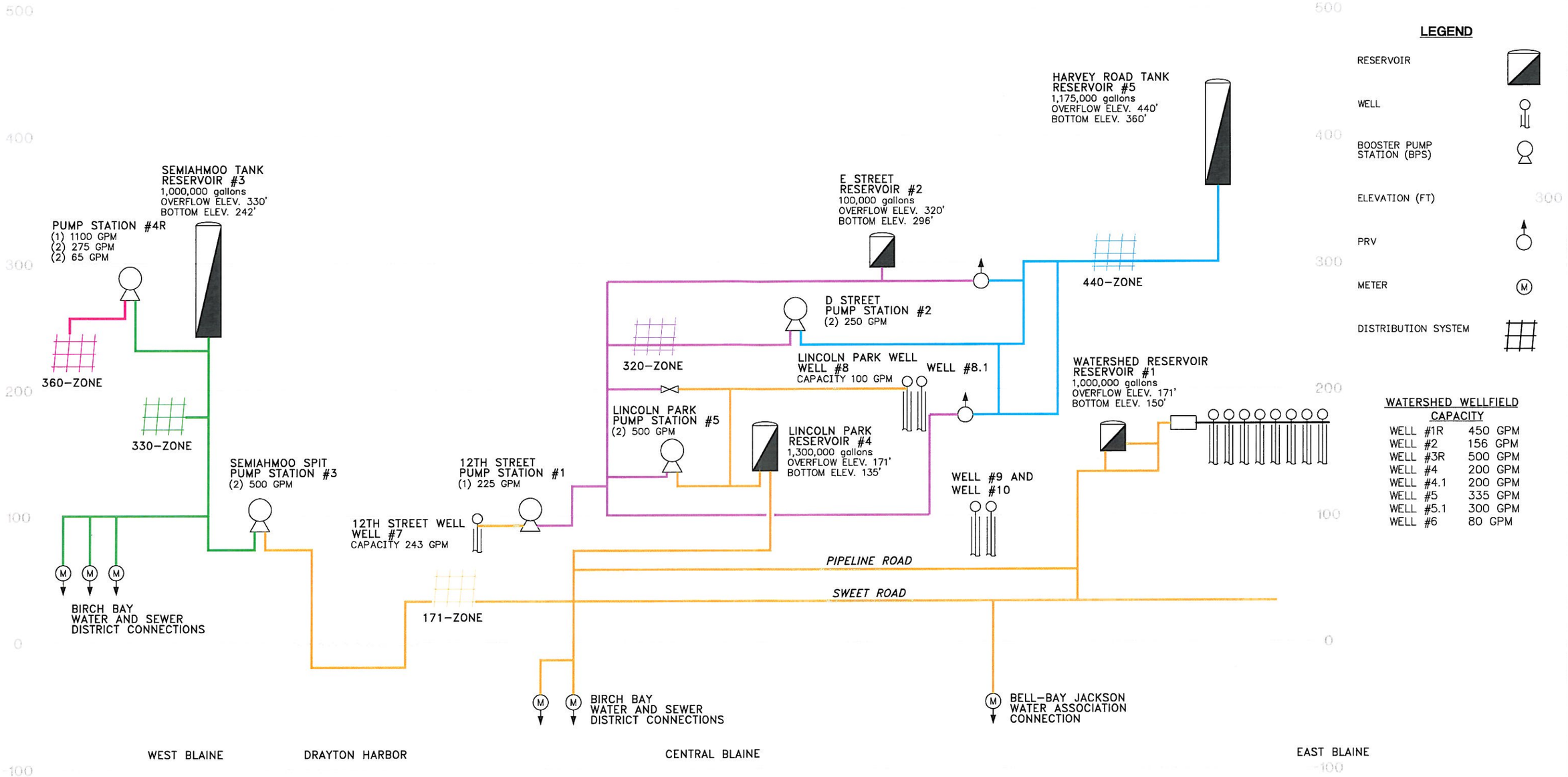

CHS
CHS ENGINEERS, LLC

CITY OF BLAINE
COMPREHENSIVE WATER SYSTEM PLAN

WATER SYSTEM SCHEMATIC
EXISTING SYSTEM

FIGURE 3.3

NOVEMBER 2009

Booster Pump Stations

The City has five booster pump stations which provide service to customers located in pressure zones higher than the 171-zone.

BPS #1 is located at 12th Street and G Street. It pumps from the 171-zone to the 320-zone. There is one pump located in the station that is rated at 225 gpm. This pump station is old and has not been regularly used for the past 10 years. The station is maintained as a backup station and there are currently no provisions for backup power at the station.

BPS #2 is located on D Street and pumps from the 320-zone to the 440-zone. There are two pumps in the station both rated at 250 gpm; however, only one pump can be run at a time. This is also an older station and is in need of renovation. The station does have a cannon plug available to connect to a standby power generator; however, the addition of a permanent standby generator for this station is desired.

BPS #3 is located on Semiahmoo Spit. It pumps from the 171-zone to the 330-zone. There are two pumps located in the station that are rated at 800 gpm each. The current capacity of the pumps is approximately 800 gpm. This station is in excellent condition and provides the entire water supply to West Blaine. There have been discussions in regard to relocating this station in conjunction with the development of the spit area. However, there are no definite plans at this time.

BPS #4R is located at the site of Reservoir #3 off Semiahmoo Parkway and pumps from the 330-zone to the 360-zone. This station (originally #4) was relocated from Bald Eagle Drive and expanded for higher service capacity. There are five variable frequency drive powered pumps in the station – two each are rated at 65 gpm, two each at 275 gpm and one at 1,100 gpm. The current capacity of the station is 1,100 gpm. This station is also in excellent condition; however, it is at capacity in regard to meeting the current peak demands of the 360-zone. At this time, a replacement for this station is currently in the design phase. The new station will be constructed at the site of Reservoir #3 and multiple pumps will be installed in the station including pumps dedicated to fire flow. A review of the capacity of BPS #3 and its relation to the storage in Reservoir #3 is recommended once the final capacity of the new station is determined.

BPS #5 is located in Lincoln Park. It pumps from the 171-zone to the 320-zone. There are two pumps located in the station that are both rated at 500 gpm; however, only one pump can be run at a time. This station is old but appears to be in good condition. There is no provision for connecting a standby power generator to this station. Therefore, the addition of a permanent standby generator for this station is desired.

A summary of the City's booster stations is presented in Table 3.14.

TABLE 3.14
City of Blaine
Existing Pump Station Data

	BPS #1	*BPS #2*	*BPS #3*	*BPS #4R*	*BPS #5*
Location	12 St. & G St.	D Street	Semiahmoo Spit	Resv. #3 Site	Lincoln Park
Pumps from zone	171	320	171	330	171
Pumps to zone	320	440	330	360	320
Number of pumps	1	2	2	5	2
Capacity of pump 1 (gpm)	225	250	800	65	500
Capacity of pump 2 (gpm)	*N/A*	250	800	65	500
Capacity of pump 3 (gpm)	*N/A*	*N/A*	*N/A*	275	*N/A*
Capacity of pump 4 (gpm)	*N/A*	*N/A*	*N/A*	275	*N/A*
Capacity of pump 5 (gpm)	*N/A*	*N/A*	*N/A*	1,100	*N/A*
Total Station Capacity (gpm)	225	250	800	1,100	500

3.3.6 Hydraulic Capacity Analysis

The existing water system was analyzed with the computer software program WaterCAD from Haestad Methods, Inc. This program integrates the network analysis methods from the Kentucky Pipe software program (KYPIPE) with the graphical interface of AutoCAD. Using the mathematical model of the City's water system, evaluations were performed for both the existing conditions and the projected future demands. These analyses were performed to determine the existing and future deficiencies within the City's water system. Where applicable alternative improvement plans were tested via the model to evaluate the optimal hydraulic solution.

The City's existing model (pipe diameter, length, roughness coefficient, junction demand and elevation, etc.) was created by an unknown party and passed along to the City upon a change in engineering consultants. Two separate electronic WaterCAD files represent the City's hydraulic model. It is assumed these two files were created due to limitations in the modeling software, which prevented the creation of a single model. The files are distinguished as East Blaine and West Blaine. The separation point is the crossing under Drayton Harbor and each file represents the appropriate supply and demand at the separation point. For both parts of the model, it appears the creator of the model evenly distributed the water demands across all model nodes throughout system.

In the evaluations performed for this plan the model was revised to include missing components of the pipe network and, in known critical areas, it was refined to reflect a more current distribution of service connections (demands) in proximity to the model nodes. From this point, global demand factors were applied to the base demand model to simulate the existing and/or projected demands for ADD, MDD or PHD. A roughness coefficient of 130 was initially assumed for all new pipes not already included in the model. Boundary conditions such as PRV settings and normal supply pressure were also entered in the model.

Computer modeling was performed for ADD, MDD and PHD conditions for all planning years. The results of the PHD demands were studied more closely than the ADD and MDD as the PHD demands for any given year are much greater than the ADD and MDD demands. The fire flow demands were also modeled under MDD conditions for each planning year. Select data regarding modeling input and output data is included in Appendix I. The following provides a summary of the modeling process and the results as they pertain to the East Blaine and West Blaine models.

Separate scenarios were created by globally increasing the demands of the model to simulate the demand conditions for years 2007 through 2013, 2017, 2022 and 2027[1].

West Blaine ADD, MDD & PHD Modeling

The hydraulic system modeling for West Blaine was performed with very specific detail in regards to the demands on the system. Ordinarily, ADD, as determined from annual usage quantities, is input into a model to evaluate the performance of the system. Actual MDD if available from records is also input into the model; however many times the MDD are determined from calculated ratios of ADD. In the case of West Blaine there were no specific records that provided data for ADD or MDD; however, input from City staff, coupled with an evaluation of the size and extensive amount of landscaping throughout the residences in the area, gave an indication that demands in this area should be considered higher than

[1] The system was evaluated by computer model in 2007 for the noted planning years, for a July 2008 draft of this plan circulated for review by DOH and other agencies. Following receipt of comments on the 2008 draft, the plan was updated for DOH review in late 2009. As discussed in Chapter 2 and earlier in Chapter 3, the six year and subsequent planning years were adjusted to begin in 2009. The previous forecast of ERU's, ADD, MDD and PHD from 2007 thru 2027 was not revised but the selected year's forecasts were highlighted in the 2009 version of this plan. When Section 3.3.6 and the previous modeling effort was reviewed for update in 2009, it was noted that no capital improvements in the distribution system were scheduled as a result of the hydraulic model analysis. System deficiencies are related to source, supply and storage capacity needs to meet the system demand, as previously identified. Therefore, the hydraulic modeling has not been updated to adjust each analysis to the demand two years later – i.e. did not re-run the 2007 analysis with 2009 demand – the 2009 analysis was already done, and so on. As discussed in this section, with the exception of the transmission mains, the system is adequate with limited exceptions through at least the year 2027, well beyond the initial six year planning period. However, unusually high pressures were noted in the output from the 2007 modeling results and the model was reviewed. Inappropriate high pressures were noted for the 320- and 440-zones. The BPS output pressures were corrected and 2007 model rerun. No additional deficiencies were noted following this correction.

the average throughout the remainder of the City. Work previously performed by RH2 Engineering in conjunction with the study for a new 360-zone booster station indicated the ADD of the area was approximately 268 gpd/ERU as opposed to the system wide ADD of 190 gpd/ERU. In addition, the ADD/MDD ratio of 3.0 was selected by RH2 as opposed to the calculated system wide ratio of 2.0. Further investigation considering the areas average lot sizes, estimated landscaped areas and projected usage from professionally installed irrigation systems confirmed that the demands and factors used by RH2 Engineering were reasonable. Therefore, 268 gpd/ERU and an ADD/MDD ratio of 3.0 were used for modeling the system in West Blaine. It should be noted that the demands were also compared to the demands used by the BBWSD in its hydraulic model. In this comparison, the demands used by the Water District were similar in scale. Initial model runs of West Blaine indicated that the system lacked sufficient pressure in the inlet area of the existing 360-zone booster station. From discussions with City staff and in reviewing the pre-design work done by RH2 Engineering, it was determined that the actual HGL for this zone was closer to 400 ft. Because work was is in progress to design a new booster station, which will be located at the site of Reservoir #3 and connected to the existing 360-zone (400-zone), this proposed station was incorporated into the model along with the proposed pipe system as described in the design report by RH2 Engineering.

With this new station in place, modeling continued for West Blaine for the 20-year planning period. Although pressures in the area of the existing booster station continued to be low, the modeling indicated pressures remained above the required 30-psi minimum for all planning years. This was also the case when a single demand of 300 gpm was introduced as a simulation of the golf course filling its irrigation ponds. Although the annual demands of the golf course are blended into the calculation of ADD and MDD, the additional single point analysis solidifies the notion that the pipe system can handle all expected demands.

In regard to the BPS #3, which serves West Blaine, the pumps in the station appear to be adequate to provide the MDD into the year 2027. This is based on the review of two specific conditions. First, restrictions were imposed on the outlet of Reservoir #3, thus forcing the booster station to supply all of the MDD. This proposed restriction increased the demands on the pumps; however, it allowed the reservoir to maintain storage volumes for peak usage periods. Secondly, the Semiahmoo Golf Course was allowed to continue to withdraw 300 gpm to fill the irrigation ponds. During peak MDD demands, the pump station is projected to be adequate in sized to meet the MDD plus this 300 gpm flow until the year 2013. However, given the recent completion of BPS#4R, it is recommended that the future demands on BPS #3 be reevaluated once the BPS #4R is fully commissioned and adjusted.

It is also recommended the City review these projected demands with the Semiahmoo Golf Course in regard to filling of the irrigation ponds. Although the supply of reuse water for irrigation is planned for the future, the City should discuss the possibility of limiting the withdrawal by the golf courses in regard to the time of day as an interim measure.

West Blaine Fire Flow Modeling

In regard to fire flow modeling, each of the City's hydraulic models were evaluated by running fire flow demands, under MDD conditions, at each node within each system model. Base parameters were set to achieve 1,000 gpm at each node, with minimum system pressures set at 20-psi for any node location within the model. All fire flow modeling for West Blaine considered the completion of the City's new booster station and the proposed improvement to feed the 360-zone (actually 400-zone). Without this booster station the system lacks sufficient fire flow along Drayton Harbor Road in the areas extending east of the intersection with Semiahmoo Parkway. However, the completion of the new booster station, and the connection of the 330 and 360-zones by a PRV, which would supply the 330-zone in low-pressure situations, will alleviate the fire flow deficiencies in this area through the 20-year planning period. Therefore, there are no recommended system upgrades in regard to fire flows within West Blaine. It should be noted that storage volumes for fire flow must be maintained in Reservoir #3 as the capacity of BPS #3 is not adequate to supply both MDD and fire flow volumes.

East Blaine ADD, MDD & PHD Modeling

Initial model runs indicated the system met minimum pressures at all locations except for model Node J730. This node represents a high point in the long dead-end run extending southeast into the area of the old Sweet Road Water Association. A small high spot along Haynie Road close to the intersection of Valley View Road has an elevation of nearly 105 feet. With an HGL of 171 feet this area does not meet minimum pressure standards.

In review of the area, the construction of a small booster station pumping to a new, localized higher pressure-zone is the simplest permanent solution, short of raising the HGL of the 171-zone. Although the concept of constructing a reservoir with a higher HGL as a replacement for Reservoir #1 does alleviate the pressure problem in this area while replacing an aging component of the infrastructure, the construction of a small booster station is viewed a faster, lower cost option. Therefore, this booster station is considered *Capital Improvement Project SU-5* (see Table 3.15) and must be constructed in order for the City to meet DOH standards.

The design of this station will include an evaluation of the local area that is already served by City. This evaluation should also consider the effect of cutting the 171-zone at certain elevations with respect to increasing usable storage volumes within the 171-zone storage reservoirs. In addition, the evaluation should also include a more extensive review of the areas to the north in regard to future service. Currently, the area directly to the north is unincorporated with no public water service. The area is currently outside the City's future service area; however, at a minimum, the planning of the booster station should consider any and all possibilities in regard to providing service to this area. This will ensure the station is correctly sized or configured to meet potential demands. An

alternative to this review is a more in-depth analysis that considers the construction of a new reservoir that replaces Reservoir #1 while providing a higher HGL. This alternative results in additional items including an evaluation of the existing well pumps, evaluation of possible reservoir sites and consideration of the additional components required to create a higher pressure zone in the area of the well field.

Additional areas with minimum system pressures are those located just east and north of intersection of Harvey Road and Pipeline Road. The topography of the area includes a ridgeline that runs northwest/southeast. The elevations north and east of this intersection are 100 feet and higher. The proposed solution to this condition is the extension of the existing water line along Harvey Road south of H Street. This line is connected to the existing 440-zone and could be used to bring higher water pressure along Harvey Road toward Pipeline Road. At this intersection, the line would continue east along Pipeline Road toward the entrance to the City's well field area. This would result in parallel lines along Pipeline Road with a higher-pressure line that will be used serve customers. These main extensions are considered *Capital Improvement Projects T/D-1 and T/D-2,* and must also be constructed to meet DOH standards. It should be noted, that a second alternative for this low-pressure area is the consideration of the previously described higher HGL option. Should the City elect to pursue the higher HGL alternative, this low pressure area should be included in the review.

An additional item to be considered with this project is a possible PRV intertie between the 440-zone and the 171-zone. This PRV would allow the City to transfer surplus (to the 440-zone) water capacity produced from Well #9 into the 171-zone until the demands of the 440-zone require full use of the well. The City has identified a proposed connection between the piping downstream of BPS #2 to the inlet/outlet line of Reservoir #4, all located in Lincoln Park.

Once the above referenced projects are completed, it is projected the existing system will operate within minimum standards until upgrades are required due to projected growth.

Upgrades to the City's system to meet anticipated growth are centered around projects that provide additional source capacity and projects that enhance the movement of water from the well field. In regard to additional source capacity, the City has already realized the need for additional water rights and has applied to the DOE for these rights. The additional water rights will permit the withdrawal of increased water volumes of water from the well field and from other wells within the City. Anticipating such procurement, the City already has plans in place to begin utilizing Well #9 for production and has also drilled two new wells, Wells #5.1 and #8.1, with #5.1 already in service at limited capacity under existing water rights.

With plans already underway to connect Well #9 to the system, the capacity from well was input into the hydraulic model for the year 2010. As planned, the well will be piped directly into the 440-zone due to its location. This connection was

input into the model and, as a result, BPS #2 was simulated to be off-line until demands within the 440-zone increased to warrant its use. This reduced the need to transfer water from the 171-zone into the upper zones, thus improving flow in the 171-zone. The drilling of Well #5.1 was completed in 2007 and it has been placed in service to pump directly into the 171-zone. Therefore, the capacity of this well was evaluated as a component of the total capacity available from the well field.

The drilling of Well #8.1 was completed in late 2007, with the well being operational by 2011. Therefore, this well was also input into the model in 2010. Water from this well will be piped into the system adjacent to Reservoir #4, which is located in Lincoln Park. This action reduces the need to draw down the 171-zone, thus affecting the storage volumes in Reservoir #4.

Due to limitations imposed by the City's water rights, the use of these wells was independently modeled and evaluated for each planning year. In summary, the addition of the wells did not greatly affect the performance of the physical system aside from reducing the need to rely on ES during peak operating times. Should the use of these wells be stalled in the water rights approval process, the City will need larger volumes of storage, as shown in Tables 3.5 through 3.7 and as presented in Section 3.3.3.

In regard to the movement of water from the well field to the City there are two main transmission pipelines traveling west from the well field. These pipelines are a 16-inch pipe located along Pipeline Road and a 12-inch pipe that extends along Sweet Road. The 16-inch pipe transitions on the east side of Interstate 5 to a 12-inch pipe that travels west under the freeway and another 12-inch pipe that follows a path northward through the city, eventually crossing under Interstate 5 at the north end of the city.

The 12-inch pipeline along Sweet Road also transitions on the east side of Interstate 5 to a 10-inch pipe that travels northward along the eastside of the freeway and 16-inch pipe that travels west under the freeway. A few hundred feet on the west side of the freeway, the 16-inch pipe transitions into a 12-inch pipe that continues west and a 10-inch pipe that heads south towards the main connection points for the BBWSD and the Bell Bay Jackson Water Association.

As the projected demands were increased in the model, the pressures in the area close to the connection with BBWSD, along Blaine Road, began to fall to levels close to 40 psi. This occurred at approximately year 2009. This pressure is still within standards; however, from this point the demands of the City and BBWSD are projected to continue to increase, thus pressures in this area will continue to drop. Therefore, *Capital Improvement Project T/D-7* was created in the model which encompasses the replacement of the transmission main from the BBWSD connection north to Hughes Avenue and then east to the east side of Interstate 5. This eliminates a section of smaller diameter pipe by the construction of a 24-inch pipe. It should be noted that BBWSD recently completed an additional connection point south along Portal Way in the area of

the City's connection to the Bell Bay Jackson Water Association. Hydraulic modeling of this connection was performed with demands equaling half of BBWSD anticipated demands placed at the existing Blaine Road connection and the other half at the then-proposed connection. The modeling indicates that the existing 10-inch pipe along Portal Way would be adequate to serve the proposed connection. With the demand at the Blaine Road connection reduced by half, there is no need to upsize the existing main from the BBWSD connection to Portal Way in order to meet the projected BBWSD demands.

For the model, the improvements for *Capital Improvement Project T/D-7* were included as described above, north of Portal Way. With this inclusion, the pipe system is projected to operate within DOH guidelines (in regard to system pressures) throughout the 20-year planning period. However, the large demands in the south end of the service area and the demands for West Blaine cause draw down in the 171-zone as water is pulled from the zone to serve these areas. This causes the City to rely on the 171-zone storage volumes as the water from the well field cannot be adequately distributed to the west to meet these demands. This is an undesirable operational procedure, as the system should be designed to meet the MDD without the use of storage. In order to eliminate the dependence on storage to meet MDD, the City must consider upsizing the main along Sweet Road from the termination of *Capital Improvement Project T/D-7* to the well field. To accomplish an acceptable rate of withdrawal from the 171-zone storage facilities, the main will need to be upsized to a minimum of 24 inches. This project is referred to as *Capital Improvement Projects T/D-8, T/D-9 and T/D-10.*

There are possible alternatives to *Capital Improvement Projects T/D-8, T/D-9 and T/D-10* that could be further evaluated prior to completing these pipe replacement projects. However these alternatives would include new pipelines though unserved areas. One such pipeline could connect to the southern-most point of the water system along Valley View Road and run west toward the BBWSD, thus creating a new supply point into the BBWSD. However, this option is viewed as unfeasible at this time due to the rural nature of the route and the limited possibilities of funding the project other than using the existing resources of the City and BBWSD.

In regard to the booster pump stations serving East Blaine, the pumps in BPS #2 and BPS #5 appear to be adequate to provide the projected MDD of the upper zones into the year 2027. This assumes Well #9 is brought on-line to supplement the demands of the 440-zone and the future 630-zone. However, the City would need to consider upsizing the pumps in BPS #2 should the connection of Well #9 not be completed by the year 2013.

East Blaine Fire Flow Modeling

In regard to fire flow modeling for East Blaine, the current model indicated that the system can support a 1,000 gpm fire flow at approximately 83% of the nodes within the system. Of the remaining 16%, almost half of these nodes represent

small, dead-end pipe runs that can only support limited sustainable flow. The majority of the rest of the locations are in two specific "low fire flow areas" which could benefit by improvements to the system. These are the Caples Addition area and the West Road LID area (see Figure 3.4). The Caples Addition is a small housing area at the end of a long 6-inch run. The improvement of fire flows to this area could be accomplished by upsizing a large portion of the run into the area to at least 8-inch pipe or creating of a loop from the most northeastern edge of the system to the existing line in Harvey Road. This second approach would improve water quality in addition to improving fire flows.

The West Road LID area is also a small housing area at the end of a long run. This area is served by a single 8-inch line that runs under Interstate 5 just northeast of the connection to the Bell Bay Jackson Water Association. The hydraulic model indicated that increasing fire flows within the area would require upsizing the main into the area to at least an 18-inch pipe, including the main running under the interstate. This is due to the area's remote proximity to the remainder of the system. However, the West Road LID area is currently meeting the fire flow requirements as presented in the County's Coordinate Water System Plan.

3.4 SYSTEM DEFICIENCIES AND RECOMMENDATIONS

The following system deficiencies have been identified from the preceding system analyses. Each section includes a summary of recommended actions based on the known conditions. Some recommendations include conducting further analyses or studies to determine the best course of action.

3.4.1 Source of Supply

The City is currently aware of impending deficiencies in source capacity and has been working to increase these capacities. In regard to meeting the projected demands, the City is advised to expedite the completion and connection of Wells #9 and #8.1 within the next two years. In regard to water rights, the City is jointly working with the BBWSD toward securing additional rights (see Chapter 4). Once additional rights are obtained, the City will investigate construction of additional source infrastructure to meet the projected demands.

In regard to the City's existing wells, the recommended improvements include the rehabilitation of Well #2 along with possible security upgrades, fences etc, at many of the wells within the well field. In addition, Wells #1R, #3R, and #8.1 require the submission of documentation for approval by DOH. It is recommended the City meet with DOH after the completion of the comprehensive planning process to determine what information DOH lacks for all City wells in its database.

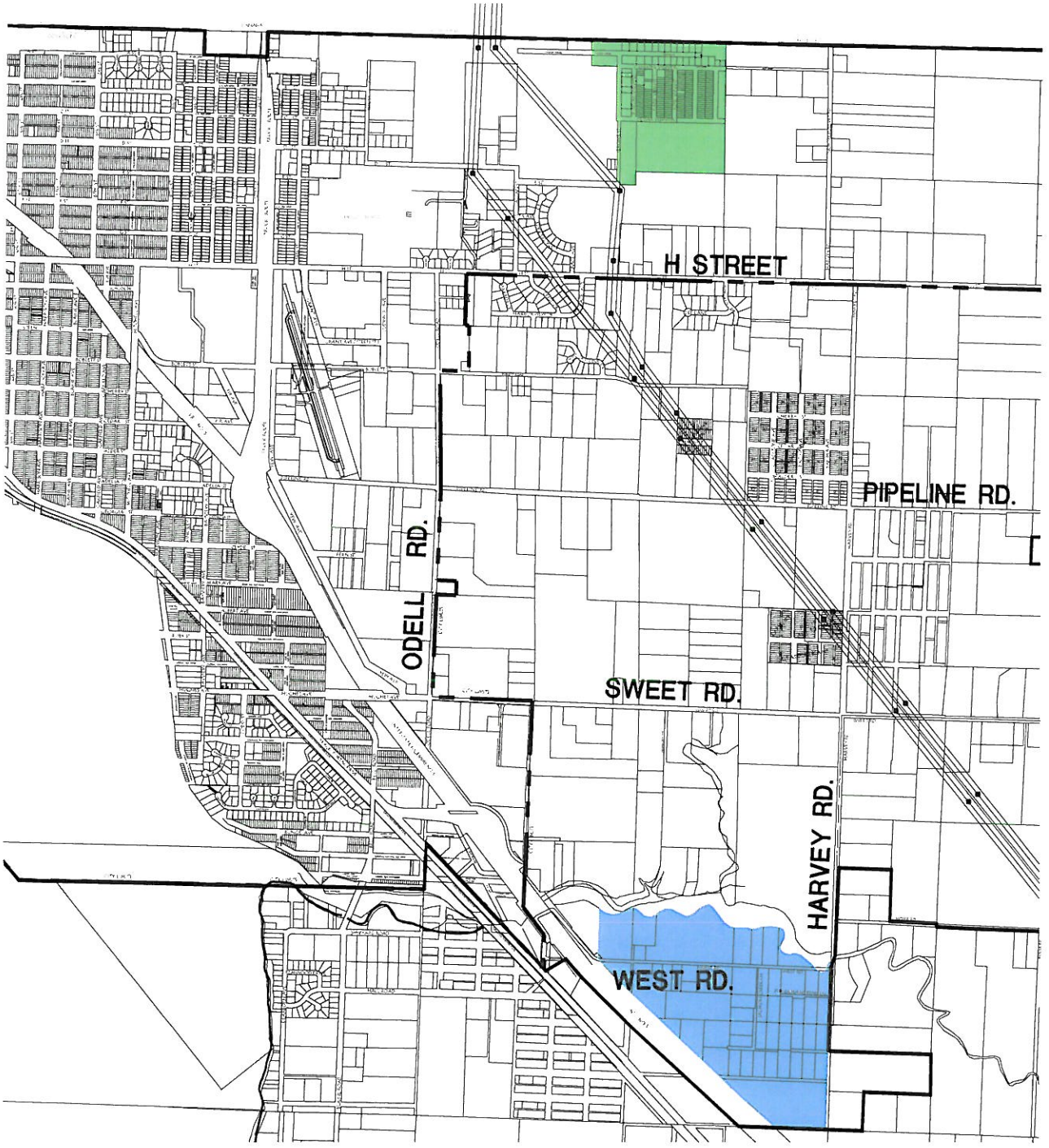

CITY OF BLAINE WATER SERVICE AREA WITHIN CITY LIMITS

CITY OF BLAINE WATER SERVICE AREA OUTSIDE CITY LIMITS

CAPLES ADDITION

WEST ROAD LID

CHS ENGINEERS, LLC

SCALE: 1"=1200'

CITY OF BLAINE
COMPREHENSIVE WATER SYSTEM PLAN

FIGURE 3.4

LOW FIRE FLOW AREAS

NOVEMBER 2009

270608\comp plan figs.DWG 11x17 1=3000 11/30/09

3.4.2 *Water Treatment*

As described in Section 3.3.2 the City's chlorine treatment system is at or near capacity during peak use days. In addition, the system is contained in a building that houses other equipment; thus, corrosion is of concern. It is recommended the City conduct a feasibility analysis to study disinfection alternatives in regard to types of treatment, treatment equipment and the location of the facility. Alternatives should consider the chlorination equipment and the projected disinfectant demands of the City's newly constructed WWTP to determine if there are benefits in a system or components of a system which can be utilized to satisfy the needs of both the water and sewer departments.

3.4.3 *Storage*

Under current operating conditions, four of the City's five existing storage reservoirs are not adequately sized to meet the required storage volumes per DOH guidelines. However, the addition of Wells #9, #5.1 and #8.1 in conjunction with changes in operational procedures can result in adequate storage volumes in all reservoirs except the 330/360 zone reservoir (Reservoir #3). With the completion of these three wells and with significant operational changes that reduce the OS volumes, the City is projected to have adequate storage volumes in the 171-zone and minimal, but adequate, volumes in the 320 and 440-zones through the 20-year planning period. The completion of any additional wells, aside from the three previously mentioned that discharge into the 320-zone or the 440-zone will decrease the required storage volumes of these zones. Therefore, during its six-year planning period, the City is advised to amend its reservoir operation procedures and review potential well sites and/or construct additional wells prior to considering the construction of additional reservoirs in these zones.

In addition, the City is advised to review the feasibility of replacing the aging concrete Reservoir #1 with a larger facility in conjunction with increasing the local HGL in the areas close to the well field. At this time, there are two capital improvement projects that are required to bring the City into compliance in regard to providing minimum service pressures. Constructing a larger, taller reservoir, which raises the local area HGL by 25 feet or more, could eliminate the need for these projects. However, increasing the HGL requires an extensive hydraulic analysis including the review of well pumps and their ability to supply a higher HGL, review of the gravity line supplying the reservoir and a review of the potential pressure zone boundaries. Additional information on the two required capital improvement projects can be found in the East Blaine Hydraulic Analysis portion of Section 3.3.6.

Upgrades to Reservoir #2 are required to relocate the drain line. Circulation improvements are recommended at Reservoirs #3, 4 and 5.

The City is also advised to proceed with investigations into the addition of a second storage facility in the 330-zone or the possibility of construction of a new

reservoir located within the 360-zone. At this time, the City does not own land within the 360-zone, therefore, it is assumed a future reservoir would most likely be constructed at the site of the current 330-zone reservoir.

Currently, the City is deficient in storage for the 330/360-zones by approximately 285,000 gallons. By the year 2029, the estimated deficiency is close to 468,000 gallons. Previous studies in conjunction with the replacement of BPS #4 reviewed the possibility of increasing the height of the existing 330-zone tank to resolve pressures issues within the 360-zone. Increasing the reservoir height would increase storage volumes; however, it was determined that this was not a feasible option. It is recommended the City begin collecting daily pumping records at BPS #3 and BPS #4R. Analysis of this data will better define the demands of West Blaine through the peak summer demand in future years and will provide data vital to the design of an additional reservoir. Work toward the design of a future reservoir should also begin immediately, including additional conversations with BBWSD in regard to their storage needs in the adjacent portion of their system and the possibility of sharing a facility. Although this is a current deficiency, implementation of a solution should be deferred in the context of potentially significant changes in the designation of portions of the adjacent unincorporated area as Rural land rather than as a portion of the Blaine UGA. This potential change would have a significant impact on the sizing of future, potentially shared, facilities in the immediate vicinity of BPS #4R and Reservoir #3.

A future reservoir is proposed within the East Blaine area. This reservoir will be coordinated with the development of the eastern portion of East Blaine. The City will work with the developers of this area to determine the timeline for construction of this facility and the booster pump station required to supply the reservoir.

3.4.4 Telemetry

The City's telemetry systems are considered adequate in terms of level sensors and the activation of booster pump stations. However, the operation of the wells is performed without telemetry, and the systems that the City does have are not tied together. With potentially three new wells being brought on-line within the next one to two years, it is recommended the City conduct a detailed evaluation in regard to the existing telemetry systems and the potential to integrate improvements as new systems are designed to accommodate the new wells. At a minimum, the connection of Well #9 will require telemetry to integrate the operation of the well with Reservoir #5 and BPS #2. Additional recommendations include the automation of the wells within the well field and alarms indicating abnormal withdrawal patterns from the reservoirs. All or a portion of these improvements could possibly be added in conjunction with the construction of a new chlorination facility.

3.4.5 *Distribution System*

General Distribution

In regard to the distribution system and the supply of adequate service pressure, there are two improvements that must be accomplished in order to bring the City into compliance with respect to providing minimum service pressures. These are the construction of a booster station to serve an area within the old Sweet Road Water Association (*Capital Improvement Project SU-5)* and construction of a water main extension from the 440-zone to serve the area in close proximity to the north and east of the intersection of Pipeline Road and Harvey Road (*Capital Improvement Projects T/D-1 and T/D-2.)* The completion of these two projects is considered a high priority and, once completed, the City is expected to be operating within DOH standards. It should be noted these projects may not be necessary if a higher HGL is created in the area of the well field (see Section 3.4.3).

Additional general distribution projects include the completion of a cathodic protection system for the 14-inch transmission line crossing under Drayton Harbor (*Capital Improvement Project T/D-6)* and various other water main replacement projects that coincide with the City's road improvement schedule (*Capital Improvement Projects T/D-3 through T/D-5 and T/D 11 through T/D-13.)*

Hydraulic Modeling – System Pressure and Fire Flow

Once the two deficiencies are remedied, the remainder of the recommended upgrades for the City's system are projects geared to meet increasing demands brought on by anticipated growth. These projects generally concentrate on the provision of additional source capacity and the enhancement of transmitting water from the well field to the western side of the service area. There are also projects identified in West Blaine that relate to system pressure deficiencies under future demand conditions. The following sections describe the improvements relative to the two hydraulic modeling files.

West Blaine

As previously described, the City's distribution system within West Blaine was modeled as unable to provide minimum pressure standards during periods of higher demand. The recently completed replacement of BPS #4, including the reconfiguration of the pipe network, will improve the performance of the system and will bring the City within compliance requirements in terms of system pressures. Therefore, there are no distribution related improvements recommended at this time.

East Blaine

As described in detail in Section 3.3.6, hydraulic modeling illustrates that the City's system is deficient in its ability to transfer water from the eastern side of

the City to meet the demands of the core area of the City along with the high demands of West Blaine and the BBWSD. In simple terms the transmission pipelines are not large enough to transfer the water, thus the local area HGL and storage volumes are drawn down to meet the demands of the south and west. From this analysis the following projects are recommended to address these demands while limiting the dependency on storage volumes to meet MDD conditions.

Capital Improvement Project T/D-7 encompasses the upsizing of the transmission main from Portal Way north to Hughes Avenue and then east to the east side of Interstate 5. This project would include the construction of a 24-inch pipe for the entire section. From discussions with the City, it is recommended the 24-inch pipe be constructed next to the existing pipe, thus creating parallel pipelines. This allows the City to have additional capacity beyond what is required until such time as the condition of the existing pipe is deemed no longer reliable.

After completion of *Capital Improvement Project T/D-7* the remainder of the transmission main from the termination of *Capital Improvement Project T/D-7* to the well field will be competed in multiple phases. *Capital Improvement Projects T/D-8 - T/D-10* are recommended in order to complete the installation of the 24-inch pipeline. As with *Capital Improvement Project T/D-7* these projects encompass the construction of a parallel pipeline thus providing additional capacity beyond the capacity of the new 24-inch pipeline.

An update to the City's hydraulic model is also recommended as an additional improvement project. The City's model was created some time ago and although it has been updated in conjunction with thus plan to reflect the critical demand points and the physical system as it stands today, the specific demands designations spread throughout the model should be updated to provide additional accuracy for localized system modeling.

Booster Pump Stations

The construction of a small booster station pumping to a new higher pressure-zone is the simplest solution to low system pressures at a small high spot along Haynie Road close to its intersection with Valley View Road. The booster station would serve approximately 36 properties and would supply domestic flows only. A parallel service line would need to be installed with existing services transferred to it. The station would be designed to handle the peak flows and would include a redundant pump. This is the simplest solution to this issue, short of raising the HGL of the 171-zone. Although the concept of constructing a higher HGL replacement reservoir for Reservoir #1 does alleviate the pressure problem in this area and replaces an aging component of the infrastructure, the construction of a small booster station is viewed a faster, lower cost option. Therefore, this booster station is considered *Capital Improvement Project SU-5* and must be constructed in order for the City to meet DOH standards.

Additional recommended booster station projects include the addition of standby power generators and Stations #2 and #5 (*Capital Improvement Project BPS-2.)*

Finally, *Capital Improvement Project BPS-1* considers the construction of a future BPS to serve the future 630-zone. This station will be constructed in conjunction with the development of East Blaine as so required by the pursuit of private development within this area.

3.5 PROPOSED IMPROVEMENT PROJECTS

Tables 3.15 and 3.16 list the capital facilities and planning projects that are recommended to correct the existing and anticipated system deficiencies. The projects are listed by category in the order as presented in this chapter. The extent of the projects in relation to all recommended City improvements is further described in Chapter 8 of this plan.

Table 3.15
City of Blaine
CAPITAL PROJECTS

ID	Capital Improvement	Project Description	Page Where Need Identified	Estimated Project Cost (2009)	Recommended Year of Completion
I. SUPPLY / TREATMENT					
SU-1	New Source	Water Rights and Water Supply (hydrogeological studies, well drilling, applications, cost reimbursement program, etc., joint with BBWSD)	3-20, 3-55	$ 300,000	2010-2012
SU-2	Well Field Pressure Zone Study & Improvements	Review of alternatives and project implementation to create higher pressure zone in well field for local service and to eliminate Well #6. Results possibly affect projects SU-3 and T/D-2.	3-51, 3-59	$ 120,000	2010
SU-3	New Source	Connection of Well #9 to 440 pressure zone. Includes review of well condition/performance. Add 440 to 171 zone connection in Lincoln Park, with PRV.	3-20, 3-55	$ 306,000	2010
SU-4	Replacement of Chlorination Treatment System	Replacement of chlorination building and chlorination equipment including engineering evaluation of treatment alternatives and facility location. Additional item includes generator for powering one well.	3-24, 3-56	$ 251,000	2010
SU-5	Booster Station w/ Back-up Power	Based on results of Project SU-2, City will determine if this project is necessary.	3-51, 3-59	$ 371,000	2011
SU-6	New Source	Upgrade of Well 5.1, including capacity increase, VFD power and telemetry connection.	3-20, 3-56	$ 125,000	2011
SU-7	New Source	Completion of Well #8.1 including pump selection and connection to system	3-20, 3-55	$ 261,000	2011
SU-8	Telemetry System	Telemetry system upgrades including telemetry system for Well #9 tying operation of Well #9, BPS #3 and RES #5	3-36, 3-58	$ 60,000	2011
SU-9	Source	Rehabilitation or reconstruction of Well #2 and possibly other wells within the well field	3-14, 3-55	$ 50,000	2013
		Subtotal for Supply Projects		**$ 1,844,000**	

Table 3.15
City of Blaine
CAPITAL PROJECTS, *continued*

ID	Capital Improvement	Project Description	Page Where Need Identified	Estimated Project Cost (2009)	Recommended Year of Completion
II. STORAGE					
ST-1	Reservoir Upgrade	Reservoir #5 Circulation Improvements	3-27	$ 35,000	2010
ST-2	Reservoir	Construction of East Blaine (630-zone) storage reservoir. Completion in conjunction with/or after completion of 630-zone BPS (BPS-1). Project driven by development of East Blaine.	3-33, 3-58	$ 2,510,000	2011
ST-3	Reservoir Upgrade	Reservoir #4 Circulation Improvements	3-27	$ 35,000	2011
ST-4	Reservoir Upgrade	Reservoir #3 Circulation Improvements	3-27	$ 35,000	2012
ST-5	Reservoir Upgrade	Reservoir #2 Drain Line modification (with future road project)	3-25, 3-56	$ 50,000	2013
ST-6	Reservoir	Construction of additional 330-zone storage reservoir.	3-31, 3-58	$ 5,622,000	2014
ST-7	Reservoir Upgrade	Replacement of Reservoir #1 (See Project SU-2).	3-51, 3-56	$ 4,518,000	2015
		Subtotal for Storage Projects		**$ 12,805,000**	
III. TRANSMISSION/DISTRIBUTION					
T/D-1	Harvey Road to Pipeline Road Main Extension	Extension of existing water line (approx. 1,400 ft.) along Harvey Rd. south of H St. to intersection of Pipeline Rd.	3-52, 3-59	$ 251,000	2010
T/D-2	Pipeline Road Main Extension	Extension of main from intersection of Harvey Road and Pipeline Road continuing east along Pipeline Rd. to entrance of City's well field area.	3-52, 3-59	$ 311,000	2010
T/D-3	9th Street Replacement	Replacement of approximately 400 linear feet of existing 6" main with 8" D.I. in conjunction with City's pavement replacement plan. Pipe replacement would extend from H Street to G Street.	3-59	$ 50,000	2010
T/D-4	B Street Replacement	Replacement of approximately 900 linear feet of existing 6" main with 8" D.I. in conjunction with City's pavement replacement plan. Pipe replacement would extend from 2nd Street to 5th Street.	3-59	$ 110,000	2010
T/D-5	4th Street Replacement	Replacement of approximately 800 linear feet of existing 6" main with 8" D.I. Replacement of approximately 100 linear feet of existing 8" main, all in conjunction with City's pavement replacement plan. Pipe replacement would extend from D Street to A Street. Add PRV at A Street.	3-59	$ 115,000	2010
T/D-6	Cathodic Protection	Cathodic protection for harbor crossing	3-43, 3-59	$ 50,000	2011

Table 3.15
City of Blaine
CAPITAL PROJECTS, *continued*

ID	Capital Improvement	Project Description	Page Where Need Identified	Estimated Project Cost (2009)	Recommended Year of Completion
T/D-7	Bell Road/Hughes Avenue Replacement	Replacement of transmission main from Portal Way north to Hughes Ave., then east to east side of Interstate 5.	3-53, 3-60	$ 841,000	2011
T/D-8	Sweet Road Upsizing - Phase 1	Upsize main along Sweet Rd. from termination of Project T/D-3 east (approx. 3,867 ft.) toward well field.	3-54, 3-60	$ 1,255,000	2013
T/D-9	Sweet Road Upsizing - Phase 2	Upsize main along Sweet Rd. from termination of Project T/D-5 east (approx. 3,867 ft.) toward well field.	3-54, 3-60	$ 1,255,000	2015
T/D-10	Sweet Road Upsizing - Phase 3	Upsize main along Sweet Rd. from termination of Project T/D-6 east and north (approx. 3,866 ft.) to well field.	3-54, 3-60	$ 1,255,000	2017
T/D-11	E Street Replacement	Replacement of approximately 400 linear feet of existing 6" main with 8" D.I. Replacement of approximately 800 linear feet of existing 8" main, all in conjunction with City's pavement replacement plan. Pipe replacement would extend from 6th Street to 12th Street.	3-59	$ 146,000	2016-2030 (w/ Road Work)
T/D-12	Cedar Street Replacement	Replacement of approximately 1,500 linear feet of existing 4" main, 400 linear feet of existing 6" main, and 200 linear feet of existing 1" main with 8" D.I., all in conjunction with City's pavement replacement plan. Pipe replacement would extend from Peace Portal Drive to Mitchell Avenue.	3-59	$ 251,000	2016-2030 (w/ Road Work)
T/D-13	11th Street Replacement	Replacement of approximately 2,200 linear of existing 6" main with 8" D.I. Replacement of approximately 300 linear feet of existing 8" main. Replacement of approximately 800 linear feet of existing 12" AC main with D.I., all in conjunction with City's pavement replacement plan. Pipe replacement would extend from H Street to B Street.	3-59	$ 412,000	2016-2030 (w/ Road Work)
		Subtotal for Transmission/Distribution Projects		**$ 6,302,000**	

Table 3.15
City of Blaine
CAPITAL PROJECTS *continued*

ID	Capital Improvement	Project Description	Page Where Need Identified	Estimated Project Cost (2009)	Recommended Year of Completion
IV. BOOSTER PUMP STATIONS					
BPS-1	Booster Station	Construction of 630-zone BPS	3-33, 3-61	$ 1,205,000	2010
BPS-2	Booster Station Upgrade	Addition of standby power generator at Lincoln Park for BPS #2 and #5	3-47, 3-61	$ 115,000	2011
		Subtotal for Booster Pump Station Projects		**$ 1,320,000**	

CIP Grand Total **$ 22,271,000**

Table 3.16
City of Blaine
SCHEDULED PLANNING PROJECTS

ID	Document Type	Project Description	Page Where Need Identified	Estimated Project Cost (2009)	Recommended Year of Completion
V. PLANNING/OTHER					
P-1	Other	Update Hydraulic Model	3-60	$ 15,000	2010
P-2	DOH Required Plan	Well Monitoring Program as required by DOH	4-19, 4-20	$ 10,000	2010
P-3	DOH Required Plan	Completion/update of Wellhead Protection Program	5-6	$ 20,000	2011
P-4	DOH Required Plan	Comprehensive Plan Update	N/A	$ 100,000	2014
		Total for Scheduled Planning Efforts		**$ 145,000**	

CHAPTER 4

CONSERVATION PROGRAM, WATER RIGHTS ANALYSIS, SYSTEM RELIABILITY AND INTERTIES

The State Departments of Health and Ecology co-published the most current conservation planning guidelines in a document entitled *Conservation Planning Requirements,* March 1994. This document provides guidelines for public water systems regarding water use reporting, demand forecasting, and conservation programs. Requirements varied according to the number of connections served by a purveyor. In general, these guidelines state that the selection and implementation of conservation measures were to be determined by comparing the cost of a proposed measure to the benefit value of the water to be conserved.

In 2003, the Washington State Legislature passed the Engrossed Second Substitute House Bill 1338, better known as the "Municipal Water Law." This law amends and clarifies sections of the Revised Code of Washington (RCW) pertaining to public water systems, including requirements for specific water conservation efforts. In summary, the law established that all municipal water suppliers must use water more efficiently in exchange for water right certainty. As regulation, Washington Administrative Code (WAC) 246-290 was amended effective January 22, 2007, to include the final rules developed from the Municipal Water Law. The new DOH code requirements mandate the development of a water use efficiency (WUE) program including WUE planning requirements, WUE goal setting and performance reporting, and distribution system leakage monitoring. For systems that serve more than 1,000 connections, the WUE program must have been implemented by January 22, 2008. Key elements include:

- Development of a WUE program
- Meeting the distribution leak standards
- Establishment of water saving goals through a public process
- Evaluation/implementation of WUE measures to manage water use and to reach the stated goals
- Annual reporting of progress towards meeting water-saving goals and using water efficiently

Group A municipal water suppliers that serve more than 1,000 connections must comply with the WUE requirements and deadlines as presented in Table 4.1.

Table 4.1
City of Blaine
WUE Requirements and Deadlines

Requirement	*Deadline*
Begin collecting production and consumption data	January 1, 2007
Include WUE program in planning documents	January 22, 2008
Set WUE goals	January 22, 2008
Submit service meter installation schedule	July 1, 2008
Submit first annual performance report	July 1, 2008
Meet distribution leakage standard (based on 3-year rolling average)	July 1, 2010, or three years after installing all service meters
Complete installation of all service meters	January 22, 2017

In regard to conservation programs, an overall Conservation Plan generally combines water use data collection requirements, water demand forecasting and a conservation program. The City's water use data and water demand forecasts have been evaluated and are presented in Chapter 2 of this plan. The City reported the best available data on water use for the categories as identified in the *Conservation Planning Requirements.* The City's WUE program and current conservation program are detailed in the following sections.

4.1 WATER USE EFFICIENCY PROGRAM

The WUE program requirements focus on data collection, demand forecasting, setting of goals and implementing measures to reach these goals. In addition, the program involves the evaluation of system leaks, water rates, and water use efficiency measures. To monitor the success of the program, municipal water suppliers must also collect production and consumption data on a regular basis.

The following list encompasses the actions that make up the City's WUE program. These items coincide with the requirements of WAC 246-290-800 and are further discussed in the sections which follow.

- Describe current water conservation program.
- Describe the WUE goals that support the program and how they were established.
- Evaluate or implement water use efficiency measures to meet the established goals for the next six years.
- Describe how customers will be educated to use water efficiently.
- Estimate projected water savings from the selected WUE measures.

- Describe how the effectiveness of the WUE program will be evaluated.
- Evaluate distribution system leakage.
- Evaluate rate structures that encourage demand efficiency.
- Evaluate reclaimed water opportunities.
- Describe the water supply characteristics.

4.1.1 Historical City of Blaine Conservation Program

Water conservation efforts within the City have been in place since 1991 with efforts significantly increasing in 1998. The goals of the City's current conservation program are to:

- Reduce peak consumption (Maximum Day Demand (MDD)) by 5 percent (Draft Comp WSP, 1996)
- Reduce annual consumption by 2 percent (Draft Comp WSP, 1996)

Lowering MDD reduces and/or defers capital expenditures required to increase source of supply and to replace or upsize transmission facilities. Reducing MDD also helps moderate operation and maintenance expenditures associated with the need for additional capacity and/or additional source facilities. Conservation that impacts MDD and ADD also defers the need to utilize additional water resources in the region.

4.1.2 Current Conservation Measures

The list below provides a summary of the conservation measures currently being implemented by the City. The conservation measures encompass both supply-side and demand-side activities. Additional information about each measure is also provided. The City's current conservation measures include:

- Source meters
- Service meters
- Water loss reduction
- Conservation pricing
- School education programs
- Public outreach
- Irrigation policies
- Joint programs/collaboration
- evaluation of reclaimed water

<u>Source Meters</u>

The City currently utilizes ten groundwater production wells as its sources of supply. Seven of the wells are located within the City's well field. All ten wells currently have source meters installed.

Service Meters

The City has been installing individual water meters on each connection since the creation of the water system. The City does not have a meter replacement program; however, customer usage is monitored to determine if meters are in need of repair or replacement. The City's development standards require all new construction to have water meters, thus ensuring the City is fully metered.

Water Loss Reduction

The City has taken measures to both minimize and account for water loss. These include having hydrant meters available to rent for temporary or emergency water service and having a pro-active water main repair and replacement program to enhance conservation efforts. This program not only improves customer service but it also decreases maintenance and repair costs.

Conservation Pricing

The City has both a fixed charge and a volumetric/commodity charge. The fixed charges reflect the costs associated with metering and billing, and it ensures a stable revenue base. The volumetric/commodity charges reflect the amount of water consumed and thus encourage conservation. The City currently has a two-tier inverted block rate structure. The current rates for a ¾ -inch connection within the City are illustrated in Table 4.2. Appendix D includes the rates for all other connections.

Table 4.2
City of Blaine
Inverted Block Conservation Pricing for ¾ Service Meter

Block	Water Usage	Inside City Limits	Federal	Within County
1	3-8 ccf*	$1.70	$1.85	$2.54
2	>8 ccf	$2.28	$2.49	$3.42

*ccf = 100 cubic feet

School Education Programs

The City coordinates with the BBWSD on a school outreach program within the Blaine School District. Members of the BBWSD staff educate students on water conservation issues and water-saving ideas. Students are then encouraged to draw pictures depicting water-saving measures. The program is designed to make every student a winner with special recognition about the event being highlighted in the local newspaper. Other schools are also encouraged to contact the City for presentations on water conservation.

Public Outreach

- **Advertising:** Advertising is a large component of the City's current conservation program. During the peak summer season, the City advertises, in conjunction with the BBWSD, in the local community newspaper, "The Northern Light", to inform water customers about the current water supply status and to offer a variety of water conservation tips. Other highlights of the advertising campaign include August as "leak awareness month" and promoting fall planting season beginning in late September/early October.

- **Website:** The City's website has a water conservation page providing information about the City's use efficiency efforts, including links to similar information posted on the Birch Bay Water and Sewer District webpage.

- **Signage:** The City has seven "sandwich board" signs which are placed at locations around the City's service area during peak summer season. The signs display varying conservation messages and are generally located at major intersections.

- **Conservation Garden:** The City currently does not have a conservation garden; however, it has done research in regard to coordination of a garden with the Blaine schools. The City will continue to pursue this opportunity.

Irrigation Policies

To limit and minimize the amount of water used for irrigation, the City initiated an odd/even water schedule for a portion of the City during the 2007 peak usage period. Preliminary review indicates the program was very successful. The City continued to implement the program throughout the City in 2008 and 2009. In addition, the City's Public Works Director is meeting with other local purveyors to discuss the possibility of instigating a regional odd/even irrigation policy.

Joint Programs/Collaboration

In 1998, the City signed a joint resolution, agreeing to work collaboratively with the BBWSD on water conservation activities/programs. Both the City and the BBWSD have similar conservation programs. Collaborative efforts include the school poster program, joint staff meetings, advertisements in local newspaper and press releases.

Evaluation of Reclaimed Water

As part of the proposed Lighthouse Point Water Reclamation Facility the City has begun the planning of a reclaimed water program and facilities. The program includes the design and construction of a 0.5 mgd reclaimed water pumping station located on Semiahmoo Spit near the existing City waste water treatment plant. Along with the plant, approximately one mile of reclaimed water conveyance pipeline is proposed to be constructed from the reclaimed water

pump station to the Semiahmoo Golf Course located south of Drayton Harbor Road and east of the Semiahmoo Parkway. Future plans beyond the initial phase described above include the identification of additional reuse customers and the construction of facilities to serve them.

4.1.3 Estimated Savings Achieved by Historical Program

Although the City's total annual water consumption has increased over the past six years, the City has maintained an average ADD of approximately 190 gallons/day/ERU for residential connections from 2000 to 2006. In addition to maintaining this ADD, the "system-wide" ADD per ERU has been on a declining trend since 2000. In the year 2000, the system-wide demand per ERU was approximately 71,200 gal/yr/ERU and in 2006 these demands were approximately 67,700 gal/yr/ERU. Although no specific information is available in regard to the amount of savings gained from conservation, the savings of 3,500 gal/yr/ERU equates to an annual savings of over 33 million gallons when considering the increase in ERUs from 2000 to 2006.

4.1.4 Water Conservation Goal

The Municipal Water Law requires municipal water suppliers to establish water use efficiency goals to enhance the efficient use of water by the public system and/or its water customers. Goals must be set through a public forum to provide customers the opportunity to comment and actively participate in the goal-setting process.

When establishing goals, suppliers and customers must include a measurable outcome in terms of water production or consumption. Reducing peak production volumes by a specified percentage or maintaining current consumption use for single-family residential units are examples of measurable outcomes. Water suppliers must also include water supply and forecasted demand characteristics and a schedule for implementing and achieving their adopted WUE goals.

The principal drivers of the City's future conservation program are geared toward staying within allotted water rights and deferring expansion of existing facilities to control costs. The conservation program provides a cost-effective approach to reducing system demand thus extending current supplies and maintaining reliability. The goal of the 2008-2013 Conservation Program is to reduce the weather adjusted, annual peak season demand by 1% each year for the period 2008 to 2013. This goal was established to reduce peak season usage and ultimately peak day demand, which in turn causes the greatest need for additional source capacity. The peak season encompasses the 61 days included in the City's July and August billing cycles.

4.1.5 2008 – 2013 Water Conservation Measures

The City's conservation program for 2008-2013 consists of the six conservation measures listed in Table 4.3. The program reflects the continuation and/or enhancement of existing measures within the City's historical conservation program. The City plans to keep the conservation program flexible over the six-year period; therefore, details may be modified to meet the conservation goals and to maintain the cost-effectiveness of the program. All six measures are scheduled to be implemented and, therefore, no measures which will be individually evaluated.

The budget for the City's 2010 conservation program will be approximately $15,000 including labor and materials. Total estimated budget cost for the six-year duration is approximately $96,000 based on a 2.5% annual increase.

The sections following Table 4.3 describe the six conservation measures in detail.

Table 4.3
City of Blaine
2008 - 2013 Conservation Program
Conservation Measures

	Type			
Measure Description	Indoor Residential	Outdoor	Industrial/ Commercial/ Institutional	**Implementation Schedule**
1. Voluntary odd/even irrigation scheduling		X		Implemented summer of 2007 in West Blaine. Implement summer of 2008 and thereafter City-wide.
2. School outreach	X	X		2008 – 2013
3. Conservation rates	X	X	X	2008 – 2013
4. Water bills that reflect consumption history	X	X	X	2009 – 2013
5. Workshops for landscapers		X		Spring 2008 & 2009
6. Distribute free irrigation gauges		X		2008 – 2013

Voluntary Odd/Even Irrigation Schedule

The City will implement a system-wide voluntary odd/even watering cycle to reduce the impact of MDD on instantaneous demand (Qi) during the peak summer months. The City successfully implemented this schedule in West Blaine in 2007, continuing in 2008 and 2009. This measure will be implemented in years 1 through 6 of the conservation program. Evaluation of the measure will consist of annually reviewing MDD figures to validate effectiveness of the voluntary program.

School Outreach Programs

The City will continue the school outreach program in coordination with BBWSD for the Blaine School District. This measure will be implemented years 1 through 6 of the program and will be evaluated by tracking the number of programs conducted and the number of students reached by the programs annually.

Conservation Rates

The City will continue to support the two-tier inverted block conservation pricing structure. In addition, the City may implement a more aggressively tiered rate structure as a result of the on-going work with the City's water rates consultant. Conservation pricing will be implemented for years 1 through 6 of the conservation program. Evaluation will consist of reviewing the peak summer demand usage after implementation of additional conservation rates. However, the true impact of this measure will only be known if it is implemented in the absence of other measures.

Water Bills that Reflect Consumption History

It is proposed that starting in 2011, the City will begin showing consumption history on customer's water bills. Bills showing consumption history will be implemented years four through six of the conservation program. Evaluation of this measure will consist of reviewing customer consumption history for the year before and after implementation of the measure.

Workshops for Landscapers

The City will begin providing workshops and presentations for interested individuals and community groups about various water conservation topics. Workshops and presentations will be implemented during years 1-6 of the conservation program. Evaluation will consist of annually tracking the number of workshops/presentations provided and the number of participants reached.

Conservation Kits

The City will continue providing conservation kits to interested single family residential and multi-family water customers. Kits will be available to water

customers for years 1-6 of the conservation program. To evaluate effectiveness and estimate savings, the City will record the number of kits provided.

4.1.6 *Customer Education*

To further promote customer education, the City is reviewing ways to provide additional information on the City's web page. The web page is viewed as a valuable tool to which a greater number of people are turning for information. The City's Public Works Department is also considering the opportunities in regard to participating in the City's annual Fourth of July celebration.

4.1.7 *Projected Water Savings*

The City has experienced an increase in population as well as an increase in ADD and MDD. Projected consumption trends indicate that without conservation efforts water demand for the total system will continue to increase during the period 2009 to 2014. During this period the City's annual water demands are projected to increase by a total of 16.3%. However, conservation efforts are projected to reduce this increase to 15.9% over the six year period. This reduction would result in a savings of approximately 3 million gallons of water over the six-year period. Table 4.4 illustrates the City's projected annual demands compared with the projected savings resulting from the conservation program.

Table 4.4
City of Blaine
Projected Annual Water Consumption 2008-2013

Year	Annual Water Demand (Without Conservation) (mg/yr)	Annual Water Demand (With Conservation) (mg/yr)
2008	690.0	690.0
2009	712.6	712.2
2010	732.3	731.4
2011	753.3	751.9
2012	776.2	774.3
2013	799.8	797.3
2014	828.6	825.6
Increase 2009-2014	*16.3%*	*15.9%*

Annual values encompass all demands including use by wholesale accounts

4.1.8 *Evaluations/Performance Reporting*

Municipal water suppliers must create an annual water use efficiency report under the WUE. The report must be made available to the DOH, water customers, and public by July 1st of every year. The report focuses on the total annual production, water distribution leak standards, system water use efficiency goals and progress on goal achievement for the previous year. The reporting requirement can be fulfilled by including the performance information in the City's annual Consumer Confidence Report. This report is the annual water quality report mailed to customers.

4.1.9 *Measurable Outcomes*

The 2009-2014 WUE Conservation Program will aim to reduce the peak season usage for customers within the City's system. When compared to the current peak season usage patterns, the estimated savings during the 2009-2014 period equates to 0.7 mg in 2009 and 8.2 mg in 2014; see Table 4.5.

Table 4.5
City of Blaine
Projected Peak Season Water Consumption 2009-2014

Year	Estimated Peak Season Usage Within City System (Without Conservation) (mg /peak season)	Estimated Peak Season Usage Within City System (With Conservation) (mg /peak season)
2008	75.1	75.2
2009	77.7	77.0
2010	80.4	78.9
2011	83.2	80.9
2012	86.1	82.8
2013	89.1	85.3
2014	92.6	84.4
Increase 2009-2014	*19.1%*	*9.6%*

4.1.10 *Goal Achievement Timeline*

Achievement of the City's conservation goals will take place incrementally during the proposed six-year conservation program. The performance of the water conservation program will be evaluated annually after each peak summer season. Evaluation procedures will include the calculation of the peak month usage per ERU. From this point, if program measures do not appear to be meeting the established conservation goal, appropriate modifications may be made to ensure the program's success.

4.1.11 Distribution Leak Standard

Under the WUE, all municipal water suppliers must maintain their distribution system leakage levels at or below 10 percent of their annual production, based on a rolling three-year average. Leakage must be reported as a percentage and as a volume. If municipal water suppliers are not meeting the distribution leak standard, they must develop and implement a Water Loss Control Action Plan. The Water Loss Plan must outline steps and timelines required to reduce system leakage.

To effectively report leaks, the WUE requires water suppliers to have meters on all existing source and service connections and to meter all future sources and connections. The WUE gives municipal water suppliers 10 years to phase in meter installation on existing connections.

The City already meets the above-described requirements in regard to source meters, service meters and water loss percentage. The City's 3-year rolling average for water loss during the period 2004 to 2006 was 6.53%. Annual water loss totals, in percentage and volume, for the past seven years (1999-2006) are provided in Table 4.6.

TABLE 4.6
City of Blaine
Annual Water Loss

Year	*Well Data (gal)*	*Billed Water Usage (gal)*	*Loss* (gal)*	*Loss (%)*
1999	518,384,000	456,719,076	61,664,924	11.90
2000	529,937,000	481,186,904	48,750,096	9.20
2001	520,319,800	464,113,804	56,205,996	10.80
2002	546,004,900	498,901,788	47,103,112	8.63
2003	565,480,500	534,972,592	30,507,908	5.40
2004	615,949,600	560,276,684	55,672,916	9.04
2005	610,157,600	581,911,836	28,245,764	4.63
2006	641,389,200	603,460,220	37,928,980	5.91

* Includes estimated use from fire flow, flushing, and reservoir cleaning

4.1.12 Evaluation of Rate Structure

The City has already instigated a water conservation rate structure through the creation of a tiered block rate. However, the City is continuing to review the entire rate structure in regard to both sewer and water rates. This investigation is being done in conjunction with the construction of the City's new wastewater treatment plant and is being refined in the context of current economic conditions. Although not final at this time, the recommendation to the City is the

consideration of an additional tier to the water rate structure. It is assumed that this third tier would further promote conservation throughout the City.

4.1.13 Evaluation of Reclaimed Water

The City has already conducted an evaluation of the possibilities associated with using reclaimed water. This evaluation was performed in conjunction with the design of the City's new wastewater treatment plant. See Section 2.1.9 for additional details.

4.1.14 Water Supply Characteristics

The City produces all of the water used within City's water service area. In addition, the City also supplies the BBWSD and the Bell Bay Jackson Water Association. Water is conveyed throughout the City from eight wells located within the City's well field. The well field is located approximately two and a half miles southeast of the downtown area. In addition to the eight wells, the City has four additional wells located throughout the water service area. Two the wells are located within Lincoln Park, close to Reservoir #4. One well is located about a half mile west of Reservoir #4 and the final well is located in the 440-zone, south of H Street and west of Harvey Road. Ten of the above-described wells are currently on-line and fully functional.

The distribution of water throughout the City is by means of a network of pipes that extends throughout the water service area. The existing wells supply water to the City's main pressure zone (171) and from this point water is conveyed by pump stations to four addition pressure zones. Two of these upper zones (320 and 440) extend east from the downtown area and the other two (330 and 360) are west of downtown along the Semiahmoo Spit and Birch Point. Water is conveyed from the 171-zone to the 330-zone through a 14-inch pipeline that is buried under Drayton Harbor.

In addition to the customers within the City's service area, the City also provides water to two wholesale water purveyors as described above. The BBWSD is a medium sized purveyor and the City is currently under contract to supply the BBWSD with up to 2.11 mgd, and provisions for additional supply as secured with pending water rights applications. The Bell Bay Jackson Water Association is a smaller water purveyor with approximately 175 connections. The City's contract with this wholesale customer is to supply 94,000 gallons per day.

At this time, the City utilizes a majority of its production capacity during peak summer days. As a result, the City has already begun an investigation into the development of new groundwater resources. From this planning, two new wells were recently drilled to supplement the existing wells. In addition, the City is also seeking additional groundwater rights.

To offset the need for additional water rights, the City has also increased its water conservations efforts including an investigation into the use of reclaimed

water. In conjunction with the new wastewater treatment plant, the City plans to produce Class A effluent to be reused for irrigation water, thus reducing the need for additional water supply. A proposed alternative is the construction of a reclaimed water conveyance pipeline to supply the Semiahmoo golf course. As a result, the City would be able to use the potable water previously used to irrigate the golf course to help address short-term growth concerns.

4.2. SOURCE OF SUPPLY ANALYSIS

The Department of Ecology requires all systems that will be pursuing water rights within 20 years to demonstrate consideration of opportunities to optimize or obtain the use of existing sources already developed. Systems that are not pursuing additional water rights are also encouraged to conduct a source of supply analysis; however, it is not required. In addition, an evaluation of other innovative methods to meet water needs should be explored. The source of supply analysis should also incorporate a review of the feasibility and cost effectiveness of implementing the alternatives in lieu of new source development. These alternatives are discussed below.

4.2.1 Enhanced Conservation Measures

Enhanced conservation measures are included in the City's WUE program as described in Section 4.1 above.

4.2.2 Water Right Changes

Well #8.1 is a recently drilled well in the vicinity of Wells #7 and #8. Due to the close proximity of this new well to the existing wells and the fact that the well is assumed to be drawing form the same shallow aquifer, the City's hydrogeological consultant has recommended that the City add Well #8.1 as an additional point of withdrawal attributed to the existing water rights for Wells #7 and #8.

4.2.3 Interties

The City currently has intertie connections with both the BBWSD and the Bell Bay Jackson Water Association. The City is currently the sole supplier of water to both these purveyors; therefore, the intertie connections are generally supply-oriented, thus flowing from the City's system. However, a recently completed intertie with the BBWSD can be used in emergency situations to supply water from the BBWSD to the City.

Aside from BBWSD and the Bell Bay Jackson Water Association, there are no other water purveyors in the vicinity of the City's system except for a water system across the border in Canada. At this time, no discussions have taken place regarding the logistics of obtaining water from a source outside of the U.S. Therefore, except for a possible intertie connection across the U.S. – Canada, border the use of interties for additional source capacity is not achievable.

4.2.4 *Artificial Recharge*

Artificial recharge is the injection or infiltration of available surface water, typically from high winter flow or other available water, into an aquifer for subsequent withdrawal at a later date. An artificial recharge program is not a viable alternative for the City as there are no viable sources of readily available surface water.

4.2.5 *Use of Reclaimed Water, Reuse, and other Non-Potable Sources*

As part of the proposed Lighthouse Point Water Reclamation Facility the City has already begun planning for a reclaimed water program and facilities. The following was taken from an addendum to the Lighthouse Point Water Reclamation Facility Plan, which was approved by the Department of Ecology on August 20, 2007. The date of the addendum is September 24, 2007.

As part of an ongoing reclaimed water planning process, which will culminate in submittal of a Reclaimed Water Plan to Washington Department of Health (DOH), the City has initiated planning of a reclaimed water program and facilities. The development of the program will be accomplished in the following phases: The development of the program will be accomplished in the following phases:

- ***Phase 1*** *– Design and construction of the LPWRF 3.1 mgd MBR treatment plant; design and construction of a 0.5 mgd reclaimed water pumping station located on Semiahmoo Spit near the existing City WWTP, including residual hypochlorite disinfectant addition, ancillary equipment and instruments for monitoring and sampling; and about 1 mile of reclaimed water conveyance pipeline from the reclaimed water pump station to the Semiahmoo Golf Course located south of Drayton Harbor Road and east of the Semiahmoo Parkway.*

- ***Phase 2*** *– Identification of additional reclaimed water users in west Blaine (Semiahmoo area) and design and construction of pumping, residual hypochlorite disinfectant addition, and conveyance facilities to provide reclaimed water to these users.*

- ***Phase 3*** *– Identification of reclaimed water users in downtown Blaine and design and construction of new facilities for primary disinfection, residual hypochlorite disinfectant addition, pumping, ancillary equipment and instruments for monitoring and sampling, storage and conveyance piping to these users.*

As part of the City's development of a Reclaimed Water Plan, this Addendum to the Facility Plan addresses requirements in WAC 246-290, including but not limited to:

- *Compliance with standards (Summary Standards required in Article 8)*
- *Cross-connection control plan*

- *Conservation programs including reuse*

To support the activities proposed in this addendum, the City is working to secure grants and loans to fund this project. To date, the City has secured a $7 million Public Works Trust Fund (PWTF) loan and a $1.5 million loan from Rural Development. The City is also on the recommended offer list for an additional $10 million PWTF loan. Additional funds have been requested from Rural Development and the City will apply for State Revolving Fund/Centennial Clean Water Fund (SRF/CCWF) funding from Ecology in 2008.

4.2.6 Treatment

Aside from the treatment of reclaimed water in conjunction with the above-described systems, there are no additional planned water treatment facilities. The type and level of treatment for additional sources will be determined at such times as the sources are identified and located.

4.3 WATER RIGHT EVALUATION

4.3.1 Existing Water Rights

The City currently utilizes ten groundwater production wells as its sources of supply. Table 4.7 below presents a summary of existing and planned well capacity and corresponding certificates, permits, and claims.

Currently the City has seven water rights in the form of certificates, permits, and claims totaling an instantaneous withdrawal of 2,970 gpm. With the supply capacity associated with the exempt Well No. 6, the City has water rights for an instantaneous withdrawal of 3,050 gpm. This water right capacity will supply the City's forecast MDD through year 2013.

The City's water rights also limit the annual withdrawal from each well. In response to an application for rights for Well #9 (known as the "Well #9 Report of Examination"), DOE indicated the City's water rights were limited to 2,560 acre-feet per year (AFY). This value equates to approximately 834,122,000 gallons per year or approximately 2.29 MGD. When compared to the projected ADD, this value allows the City to meet the projected annual demands through year 2014.

The City has two water right applications dating back to 1992 for Wells #1R and #2 that are currently pending review by DOE. These two rights equate to an additional instantaneous withdrawal of 650 gpm. Additionally, the City filed five applications for additional water rights in January of 2007. These requests are for an instantaneous withdrawal of 1,100 gpm for each application, totaling an increase in the City's instantaneous withdrawal of 5,500 gpm. The additional water right applications are the subject of protest by the Lummi Nation.

The City, in cooperation with Birch Bay Water and Sewer District, entered into an agreement with DOE to participate in the DOE Cost Reimbursement Program (CRP) in late 2008 for expedited review of pending water right applications. Water right applications for City Wells #1R, #2, and #5.1 and District Well PW-2 (aka 2D) are being processed collectively by DOE through this program. Costs are being shared jointly by the City and District per the First Amendment to Agreement for Wholesale Supply of Water between the parties (see Appendix B). The total additional capacity requested is 2,250 gpm. Per the First Amendment, water rights secured through this process will be shared between the City and District pursuant to the terms of the Agreement for Wholesale Supply of Water, as amended. The CRP is well under way and completion is anticipated early in 2010. As part of this process, the City and District met directly with DOE and Lummi tribal representatives in the spring of 2009. The purveyors described their recently-enhanced and joint water conservation efforts and overall strategy regarding regional water supply.

The four applications being considered by DOE include a total annual withdrawal of 2,696 AFY. Upon approval, the City's maximum instantaneous withdrawal under certificates and permits would be 4,500 gpm (including Well #6 and District Well PW-2) and maximum annual withdrawal would be 3,966 AFY, which equates to 3.54 MGD. These additional rights would meet forecast demand through year 2025 for MDD and year 2028 for ADD.

As noted above, additional applications will remain in place following this near-term process to meet the demand approaching the end of the twenty-year planning period and beyond.

4.3.2 Current Water Usage and Projected Needs

Each of the City's existing water rights is detailed in Tables 4.7 and 4.8. In addition, the City's existing consumption demands are also included in this table. Table 4.8 mimics DOH Table 3 which can be found in the Water System Planning Handbook, Chapter 4. There are no peak hour demand records for the City's system; therefore, the maximum instantaneous flow rates were determined from reviewing well pump capacities. Annual volumes were determined by averaging annual usage of each well over the last three years.

As illustrated in Table 4.8, the City's current water right status is a surplus in instantaneous withdrawal and annual withdrawal of 477 gpm and 783 AFY respectively. However, as discussed above, the City is projected to fully utilize maximum instantaneous amounts by the year 2013 during periods of maximum day demand.

Table 4.7
City of Blaine Wells and Water Rights

Well #	Documentation	ID #	Priority Date	Qi (gpm)	Qa (AFY) per documentation	Qa (AFY) per Well 9 Report	Installed Capacity (gpm)	Inchoate Rights (gpm)	Notes
EXISTING WATER RIGHTS									
1	CLAIM	300037	1926	800	1290				
1R							450		Utilizes portion of Well 1 claim.
2							156		Utilizes portion of Well 1 claim.
3	CERTIFICATE	Cert Rcrd 8 Pg 3912-A	22-Dec-58	500	800				This well is scheduled to be decommissioned in spring of 2010. Not in use.
3R							500		Replacement for Well 3.
4	CERTIFICATE	Cert Rcrd 11 Pg 5315-A	21-May-65	400	640		200		
4.1							200		Additional point of withdrawal for Well 4
5	CERTIFICATE	G1-22483C	14-Apr-75	450	726		335		
5.1							309		Additional point of withdrawal for Well 5. Pump is managed so that it only produces the inchoate portion of Well 5 (115 gpm) and the unutilized portion of the Well 1 claim (194 gpm).
6				80			80		Exempt well.
7	CERTIFICATE	Cert Rcrd 12 Pg 5917-A	9-Jul-51	320	448		243	77	Well 8.1 will be added as additional point of withdrawal for Well 7.
8	CERTIFICATE	Cert Rcrd 14 Pg 6916-A	7-May-69	300	288		100	200	Well 8.1 is an additional point of withdrawal for Well 8.
8.1									Pump is managed so that it only produces the inchoate portion of Well 8 (200 gpm). Actual capacity is 620 gpm, which equals the combined water rights for Wells 7 & 8.The plan is to seek approval to operate these three wells interchangeably within the total approved water rights for Wells 7 & 8, in 2012
9	PERMIT	G1-26822P	13-Nov-92	200	320			200	Scheduled to be online spring of 2010.
Total Current Rights				**3050**		**2560**	**2573**	**477**	Current Rights and Installed Capacity - 2009

Table 4.7 (continued)
City of Blaine Wells and Water Rights

Well #	Documentation	ID #	Priority Date	Qi (gpm)	Qa (AFY) per documentation	Qa (AFY) per Well 9 Report	Installed Capacity (gpm)	Inchoate Rights (gpm)	Notes
SCHEDULED ENHANCEMENTS TO EXISTING WATER RIGHTS AND INSTALLED CAPACITY.									
8 1							277		See Note above regarding coordination with rights for Wells #7 and #8.
9	PERMIT	G1-26822P	13-Nov-92	200	320		200		Scheduled to be online spring of 2010.
Total Current Rights/Enhanced Capacity				**3050**		**2560**	**3050**		Implements full utilization of existing water rights by 2012, including Well 6.
PLANNED ADDITIONS TO WATER RIGHTS -- I. COST REIMBURSEMENT PROGRAM									
1R	APPLICATION	G1-26821A	11-Nov-92	450	720		450	0	
2	APPLICATION	G1-26820A	13-Nov-92	200	320		156	44	Well #2 will require upgrade for increased capacity, as described in Chapter 3 and identified as Project SU-9 in Chapter 8.
5.1	APPLICATION	G1-28481A	30-Jan-07	1100	850		1215		This well will serve as an additional point of withdrawal for Well 5, as well as pumping the water for the new water right.
2D	APPLICATION	G1-28046A	3-Aug-99	500	806			500	This well is property of Birch Bay Water and Sewer District. Per terms of the wholesale water supply contract between the City and the District, this facility and its associated water rights will be transferred to and operated by the City.
Total Additions - Cost Reimbursement Program				**2250**	**2696**		**1821**	**544**	
Total Rights following Cost Reimb. Program				**4500**		**3966**	**3956**	**544**	Does not include the Well 1 Claim, Includes Well 6 (exempt).
PLANNED ADDITIONS TO WATER RIGHTS -- II. OTHER APPLICATIONS									
Section 5	APPLICATION	G1-28482	2007Jan30	1100	850				Up to 6 wells
Section 8	APPLICATION	G1-28483	2007Jan30	1100	850				Up to 6 wells
Section 9	APPLICATION	G1-28484	2007Jan30	1100	850				Up to 6 wells
Section 33	APPLICATION	G1-28485	2007Jan30	1100	850				Up to 6 wells

Table 4.8
City of Blaine
EXISTING WATER RIGHTS

Permit Certificate or Claim Number	Name of Rightholder or Claimant	Priority Date	Source Name/ Number	Primary or Supplemental Qi/Qa	Existing Water Rights		Existing Consumption[1]		Current Water Right Status (Excess/Deficiency)	
					Maximum Instantaneous Flow Rate (Qi, gpm)	Maximum Annual Volume (Qa, AFY)	Maximum Instantaneous Flow Rate (Qi, gpm)	Maximum Annual Volume (Qa, AFY)	Maximum Instantaneous Flow Rate (Qi, gpm)	Maximum Annual Volume (Qa, AFY)
Permits/Certificates										
Cert Rcrd 8 Pg 3912-A	City of Blaine	12/22/58	Well 3 / S03	Emergency[2]						
Cert Rcrd 8 Pg 3912-A	City of Blaine	12/22/58	Well 3R / S11	Prim./Prim.	500	800	500	307	0	
Cert Rcrd 11 Pg 5315-A	City of Blaine	05/21/65	Well 4 / S04	Prim./Supp.[6]	400	640	200	303	0[10]	
Cert Rcrd 11 Pg 5315-A	City of Blaine	05/21/65	Well 4.1 / S013	Prim./Supp.			200	49		
G1-22483C	City of Blaine	04/14/75	Well 5 / S05	Prim./Supp.[7]	450	726	335	353	0[11]	
3007/G1-2483C/G1-28481A	City of Blaine	01/30/07	Well 5.1/S13	Prim./Supp[3]			309			
	City of Blaine		Well 6 / S08	Prim./Prim.[5]	80	0	80			
Cert Rcrd 12 Pg 5917-A	City of Blaine	07/09/51	Well 7 / S07	Prim./Prim.	320	448	243	57	77	
Cert Rcrd 14 Pg 6916-A	City of Blaine	05/07/69	Well 8 / S06	Prim./Supp.[8]	300	288	100	29	200	
G1-26822P	City of Blaine	11/13/92	Well 9 / Boblett #2	Prim./Prim.	200	320			200	
	City of Blaine		Well 10 / Boblett #1	GWMW						
Claims										
300037	City of Blaine	1926	Well 1/ S01	Primary	800	1290	-	-		
300037/G1-26821A	City of Blaine	1926	Well 1R / S10	Primary[3,4]			450	449		
300037/G1-26820-A	City of Blaine	1926	Well 2 / S02	Primary[3,4]			156	229		
TOTAL					3,050	2560[9]	2,573	1,777	477	783

Intertie Name/ Identifier	Name of Purveyor Providing Water	Existing Limits on Intertie Water Use		Existing Consumption		Current Water Right Status (Excess/Deficiency)	
		Maximum Instantaneous Flow Rate (Qi, gpm)	Maximum Annual Volume (Qa, AFY)	Maximum Instantaneous Flow Rate (Qi, gpm)	Maximum Annual Volume (Qa, AFY)	Maximum Instantaneous Flow Rate (Qi, gpm)	Maximum Annual Volume (Qa, AFY)
N/A	N/A						
TOTAL							

Pending Water Right Application	Name on Permit	Date Submitted	Primary or Supplemental	Pending Water Rights	
				Maximum Instantaneous Flow Rate (Qi, gpm) Requested	Maximum Annual Volume (Qa,AFY) Requested
G1-28481	City of Blaine	January, 2007	Primary	1,100	850
G1-28482	City of Blaine	January, 2007	Primary	1,100	850
G1-28483	City of Blaine	January, 2007	Primary	1,100	850
G1-28484	City of Blaine	January, 2007	Primary	1,100	850
G1-28485	City of Blaine	January, 2007	Primary	1,100	850

Note - "DOE Well #9 ROE" means the Department of Ecology Well #9 Report of Examination issued July 16, 1998.

[1] Existing Consumption Data is based on 3yr. average from 2004 - 2006.

[2] Well 3 will be decomissioned; rights transferred to replacement Well 3R.

[3] Use from Wells 1R & 2 and portion of 5.1 covered by inchoate rights of Well 1 Claim.

[4] City considers use covered by inchoate rights of Well 1 Claim.

[5] Well only serves 6 homes - City assumes no rights required (exempt well).

[6] DOE Well #9 ROE indicates Well #4 "Qi Granted - 400 gpm, Qa Granted - 640 afy*....*Qa supplemental to existing rights, limits total system Qa to 2,240 afy."

[7] DOE Well #9 ROE indicates Well #5 "Qi Granted - 450 gpm, Qa Granted - 726 afy*...*Qa totally supplemental to existing rights."

[8] DOE Well #9 ROE indicates Well #8 "Qi Granted - 300 gpm, Qa Granted 288 afy*...*Qa supplemental."

[9] DOE Well #9 ROE indicates Qa limited to 2,560 AFY.

[10] Use of Wells 4 and 4.1 combined under single right.

[11] Well 5.1 includes 115 gpm covered by inchoate rights of Well 1 Claim.

Table 4.9
City of Blaine
FUTURE WATER RIGHTS

Permit Certificate or Claim Number	Name of Rightholder or Claimant	Priority Date	Source Name/ Number	Primary or Supplemental Qi/Qa	Existing Water Rights		Forecasted Consumption[1]		Forecast Water Right Status (Excess/Deficiency)	
					Maximum Instantaneous Flow Rate (Qi, gpm)	Maximum Annual Volume[2] (Qa, AFY)	Maximum Instantaneous Flow Rate (Qi, gpm)	Maximum Annual Volume[2] (Qa, AFY)	Maximum Instantaneous Flow Rate (Qi, gpm)	Maximum Annual Volume[2] (Qa, AFY)
Permits/Certificates										
Cert Rcrd 8 Pg 3912-A	City of Blaine	12/22/58	Well 3 / S03	Emergency[3]						
Cert Rcrd 8 Pg 3912-A	City of Blaine	12/22/58	Well 3R / S11	Prim./Prim.	500	800	500	800	0	0
Cert Rcrd 11 Pg 5315-A	City of Blaine	05/21/65	Well 4 / S04	Prim./Supp[4,5]	400	640	200	320	200	320
Cert Rcrd 11 Pg 5315-A	City of Blaine	05/21/65	Well 4.1 / S013	Prim./Supp[4,5]			200	320	(200)	(320)
G1-22483C	City of Blaine	04/14/75	Well 5 / S05	Prim./Supp[6,7]	450	726	335	726	115	0
3007/G1-2483C/G1-28481A	City of Blaine	01/30/07	Well 5.1/S13	Prim./Supp[8,9]			1215	850	(1,215)	(850)
	City of Blaine		Well 6 / S08	Prim./Prim.[10]	80	0	80	0	0	0
Cert Rcrd 12 Pg 5917-A	City of Blaine	07/09/51	Well 7 / S07	Prim./Prim.	320	448	0	0	320	448
Cert Rcrd 14 Pg 6916-A	City of Blaine	05/07/69	Well 8 / S06	Prim./Supp[11]	300	288	0	0	300	288
	City of Blaine		Well 8.1	Prim./Prim.			620	736	(620)	(736)
G1-26822P	City of Blaine	11/13/92	Well 9 / Boblett #2	Prim./Prim.	200	320	200	320	0	0
	City of Blaine		Well 10 / Boblett #1	GWMW						0
	Birch Bay WSD		Well 2D	Prim./Prim.[8]			500	806	(500)	(806)
G1-28482	City of Blaine	Jan. 07	Section 5	Prim./Prim.			597	850	(597)	(850)
Claims										
300037	City of Blaine	1926	Well 1/ S01	Primary	800	1290				
300037/G1-26821A	City of Blaine	1926	Well 1R / S10	Prim./Prim.[8]			450	720	(450)	(720)
300037/G1-26820-A	City of Blaine	1926	Well 2 / S02	Prim./Prim.[8]			200	320	(200)	(320)
TOTAL					3,050	*1,270*	5,097	*3,526*	(2,847)	*(2,256)*

(Note - Qa totals immediately above are for system as a whole based on DOE ROE, not including Well 1 Claiim and not additive using individual well info).

Intertie Name/ Identifier	Name of Purveyor Providing Water	Existing Limits on Intertie Water Use		Existing Consumption		Current Water Right Status (Excess/Deficiency)	
		Maximum Instantaneous Flow Rate (Qi, gpm)	Maximum Annual Volume (Qa, AFY)	Maximum Instantaneous Flow Rate (Qi, gpm)	Maximum Annual Volume (Qa, AFY)	Maximum Instantaneous Flow Rate (Qi, gpm)	Maximum Annual Volume (Qa, AFY)
N/A	N/A						
TOTAL							

Pending Water Right Application	Name on Permit	Date Submitted	Primary or Supplemental	Pending Water Rights	
				Maximum Instantaneous Flow Rate (Qi, gpm) Requested	Maximum Annual Volume (Qa,AFY) Requested
G1-28483	City of Blaine	January, 2007	Primary	1,100	850
G1-28484	City of Blaine	January, 2007	Primary	1,100	850
G1-28485	City of Blaine	January, 2007	Primary	1,100	850

Note - "DOE Well #9 ROE" means the Department of Ecology Well #9 Report of Examination issued July 16, 1998.

[1] Forecasted Consumption based on forecast MDD and annual demands - see Table 3.2.

[2] DOE ROE indicates Qa limited to 2,560 AFY. Assumes Well 1 Claim amount to be excluded from Qa total per DOE ROE.

[3] Well 3 will be decomissioned; rights transferred to replacement Well 3R.

[4] Use of Wells 4 and 4.1 combined under single right.

[5] DOE Well #9 ROE indicates Well #4 "Qi Granted - 400 gpm, Qa Granted - 640 afy*....*Qa supplemental to existing rights, limits total system Qa to 2,240 afy."

[6] 115 gpm inchoate used at Well 5.1

[7] DOE Well #9 ROE indicates Well #5 "Qi Granted - 450 gpm, Qa Granted - 726 afy*...*Qa totally supplemental to existing rights."

[8] Rights anticipated in 2010 through DOE Cost Reimbursement Program

[9] Includes 115 gpm from Well 5 - additional point of withdrawal.

[10] Well only serves 6 homes - City assumes no rights required (exempt well)

[11] DOE Well #9 ROE indicates Well #8 "Qi Granted - 300 gpm, Qa Granted 288 afy*...*Qa supplemental."

Table 4.9 compares future demand to present rights. This figure mimics DOH Water System Planning Handbook Chapter 4 Table 4. Utilizing the projections described above, it is evident that the City is projected to be deficient in water rights in terms of both instantaneous withdrawal and annual withdrawal. Further discussions regarding the City's projected water needs compared to the existing water rights can be found below in Section 4.4.2.

4.4 WATER SUPPLY RELIABILITY ANALYSIS

4.4.1 Source Reliability

All of the City's active wells have historically maintained the current production capacities; therefore, they are deemed as reliable sources of supply. As stated in Chapter 3, during peak operation periods, the drawdown of Wells 4 and 4.1 affecting each other due to their close proximity. At this time this is not viewed as an issue as the use of one well is scaled back while the other is used at close to maximum capacity. However, as the City's demands increase the full use of both wells may be required.

As stated previously the use of Wells #7 and #8 are limited during off-peak times due to the lack of chlorination of the source water from these wells and some minor aesthetic properties of the water. However, both wells are deemed reliable and can be used to their full capacity. It should be noted that once Well #8.1 is fully operational, both Wells #7 and #8 will remain in service as a reliability measure, but not used for regular production.

4.4.2 Water Rights Adequacy

In regard to the adequacy of the City's water rights, Table 4.9 illustrates both the future maximum instantaneous flow rates and the estimated annual withdrawal. Considering the current allowable instantaneous withdrawal of 2,970 gpm, the City's estimated MMD is projected to reach the allowable amount by the year 2013. The forecasted maximum instantaneous flow rate for current rights and following approval of pending applications through the DOE CRP (see Table 4.7) should meet the projected MDD thru the year 2025. The forecast connections at that point in time represent approximately 17,073 ERUs. The City is projected to be deficient in water rights for instantaneous withdrawal by 597 gpm assuming no additional rights are secured by the end of year 2029. . Similarly, the City is projected to be deficient in annual withdrawal rights by 1,435 AFY assuming no additional rights are secured by 2029.

Table 4.9 includes anticipated approval of at least one of the outstanding water rights applications filed in January 2007, beyond those being processed under the CRP at this time. More analysis is necessary to confirm which application will be pursued but each is for the same instantaneous and annual flow rates.

This further emphasizes the City's need to pursue confirmation of all existing rights and the approval of the additional rights, or a portion thereof, as requested in January of 2007 and emphasized through participation in the DOE CRP.

In summary, the City's current water rights are estimated to be adequate until the year 2013, as limited by maximum instantaneous withdrawal. Currently the City and Birch Bay Water and Sewer District are working together with a hydrogeologist and a water rights attorney in an effort to obtain additional water rights. Bearing in mind the projected need for additional rights is required within the next few years, it is the City's top priority to continue pursuing these additional rights.

If the described efforts are not successful in timely additional water rights, the City will continue working with the District to jointly secure additional water supply, including consideration of additional water conservation, water reuse and surface water sources. The interim policy to carefully consider water supply outside City-limits is one method to limit this critical resource.

4.4.3 Water Shortage Response Planning

The City's water shortage response plan is entitled *Water Supply Emergency Response Action Plan*. The plan was created in July of 1995 and includes measures to manage multiple levels of short-term water shortages. The plan is designed to implement different stages as progressively more serious conditions occur. The stages range from actions to deal with a 30% reduction in storage volumes (over a 24-hour period) to those actions required to address a major catastrophic event that results in loss of system pressures. Actions include water system management, customer conservation, public involvement and enforcement.

4.4.4 Well Monitoring Program

The City has prepared a draft groundwater monitoring plan, with the goal to complete it later in 2010. A copy of the draft plan is included at the end of Appendix F.

4.5 INTERTIES

As the wholesale supplier of water to the BBWSD and the Bell Bay Jackson Water Association the City maintains intertie connections with both of these purveyors. At this time the City is the sole supplier of water to both of these purveyors. The following sections describe the City's intertie connections with these systems.

4.5.1 Birch Bay Water and Sewer District

There are five interties between the City and BBWSD system. These connections include a 10-inch connection near the point where Blaine Road

crosses Dakota Creek, a 10-inch connection on Portal Way immediately southeast of the West Road intersection, a 2-inch connection near Semiahmoo (Birch Point), and two separate 4-inch connections along Semiahmoo Parkway. The connections at Blaine Road and Portal Way are supplied by the City's 171-zone and the other three connections are supplied from the 330-zone through water pumped by BPS #3. Once the water passes through the 10-inch connections it is immediately pumped up to the BBWSD 200-zone through a BBWSD-owned and operated BPS.

The connections at Blaine Road and Portal Way represent the main supply points for BBWSD. The smaller 2-inch connection is also a full time connection; however, it is limited to approximately 50 gpm. None of these three connections can be used to supply water from BBWSD back into the City's system. The two connections on Semiahmoo Parkway provide standby service for portions of the District's system. These 4-inch connections are located on opposite sides of the street at the intersection of Horizons Drive and Semiahmoo Parkway. One of these connections ties the City's 330-zone to the BBWSD 200-zone. This intertie was also designed to allow the addition of an aboveground, temporary pump to provide water back into the City's system under emergency conditions. The station is considered an emergency intertie that is operated by the BBWSD in cooperation with the City. The intended typical use for this intertie is to operate only during peak conditions. The other connection is strictly a one-way connection from the City's 330-zone to the BBWSD 300-zone. This station is open at all times and operates when the BBWSD system pressures drop below normal operating conditions.

The current agreement between the City and the BBWSD limits the withdrawal by the BBWSD to 2.11 MGD and a total annual withdrawal of 1,280 acre-ft/yr.

4.5.2 Bell Bay Jackson Water Association

The intertie with the Bell Bay Jackson Water Association is comprised of a 2-inch low flow connection and a 4-inch connection. The connections are in the same location and tap onto a City-owned 10-inch main located along Portal Way. These connections represent the only connection between the City and the Association. The current agreement between the City and the Association limits the Association to 52 acre-ft/yr and 94,000 gallons per day.

Copies of the agreements between City and these purveyors are included in Appendix B of this plan.

4.5.3 Proposed Interties

The City is not presently considering additional interties.

4.6 IDENTIFICATION OF SYSTEM IMPROVEMENTS

Recommended improvements stemming from the information in this section are limited to recommendations in regard to the continuation of the City's conservation program and the completion of the draft groundwater monitoring program.

CHAPTER 5

SOURCE PROTECTION

The intent of this chapter is to evaluate existing protocols and to develop a program to protect and improve the source water utilized by the City. Any facilities and activities within the zone of contribution to the source wells that may adversely impact the quality of the City's source water must be identified, monitored, limited and controlled to the greatest extent possible. Because the City's sources include only groundwater wells, a surface water watershed protection program is not required. However, a wellhead protection program is required.

5.1 WELLHEAD PROTECTION PROGRAM

The City's Wellhead Protection Plan (WHPP) was prepared by Golder Associates in 1996. The program is described in a *Wellhead Protection Program Report,* dated November of 1996. The copies of the report, which are on file at the City's offices, are marked as a "Draft Plan" and it is unclear if a final version was prepared. In the draft plan, there are references to the City's Groundwater Management Program (GWMP) which appears to have been newly approved at the time of the writing of the WHPP. The date of the GWMP appears to be June of 1994. The following sections are prepared from, and make reference to, the Draft WHPP (November 1996) and the GWMP (June 1994) currently on file at the City.

5.1.1 Overview

The intent of a wellhead protection program is to reduce the potential risk for contamination of groundwater within the wellhead protection area. The components of the City's WHPP include a description of the hydrogeological setting, a delineation of the well head protection area, a summary of water quality conditions, an inventory of potential sources of contamination, recommendations for groundwater management and contingency planning with information in regard to future groundwater sources.

5.1.2 Completed Susceptibility Assessment

Groundwater Contamination Susceptibility Assessment Survey forms were found for ten of the City's wells. It is assumed that each of these forms was filed with the Department of Health. Appendix F includes copies of these forms.

5.1.3 Delineated Wellhead Protection Area

A wellhead protection area (WHPA) is defined as the surface and subsurface area surrounding a well that supplies a public water supply. It is within this area that any introduced contaminants are likely to infiltrate and could eventually reach the water within the wells. The mapping of WHPAs includes the

delineation of the aquifer boundaries and the determination of time of travel (TOT) for groundwater to the well(s). The determination of the TOT provides the estimated distance a contaminant will travel to reach the well within a given period of time. For example the 1-year TOT zone represents the area around a well or well field in which a contaminant moving at the same rate of speed as the groundwater would reach the well or well field within 1 year. The delineated TOT zones for the City's wells are provided in Figure 5.1.

If a spill of hazardous material occurred within the protection area of one or more of the City's wells, it could pose a direct risk to the drinking water supply for the City. Per the City's WHPP, the method used to delineate the WHPA and the TOT zones was a combination of hydrogeologic mapping and analytical modeling known as TWODAN. According to the WHPP, the hydrogeologic mapping estimated the recharge area of the shallow aquifer encompasses 3.2 to 3.9 miles. However, the report states that insufficient data existed to determine the recharge area of the deep aquifer system. The cross-sectional properties of the aquifers as presented in the City's WHPP are represented in Appendix F. These figures were taken directly from the City's WHPP.

In addition to hydrogeologic mapping, groundwater modeling was also performed to evaluate groundwater flow and to determine the TOT zones. Due to the lack of information pertaining to the hydraulic interaction between the deep and the shallow aquifer, each aquifer system was modeled independently. The shallow aquifer was modeled as a single aquifer of uniform thickness with an average rate of flow applied throughout the aquifer. With little known in regard to the characteristics of the deep aquifer, this aquifer was modeled assuming the characteristics around Well #1 applied to the entire aquifer.

Within the WHPP, the 1-year, 5-year and 10-year TOT zones were delineated for the existing and future conditions with the differentiation between the two as the addition of Wells #7 and #9 to the future condition. The future conditions did not propose increasing the existing well capacities. When comparing the pump rates modeled (for the future condition) to the rates currently being utilized, six of the wells are currently pumping at rates lower than what was modeled, two are pumping at higher rates and the final well (Well #9) is currently not being used. However, the City's proposed pump rate for Well #9 is equal to the value that was modeled.

In addition to the information presented in the City's WHPP, the City's Groundwater Contamination Susceptibility Assessment Survey forms include the determination of calculated fixed radii for the 6-month, 1-year, 5-year and 10-year TOT for contaminants. The following table illustrates the size of the related zones of contribution for each City well as stated in the Groundwater Contamination Susceptibility Assessment Survey forms.

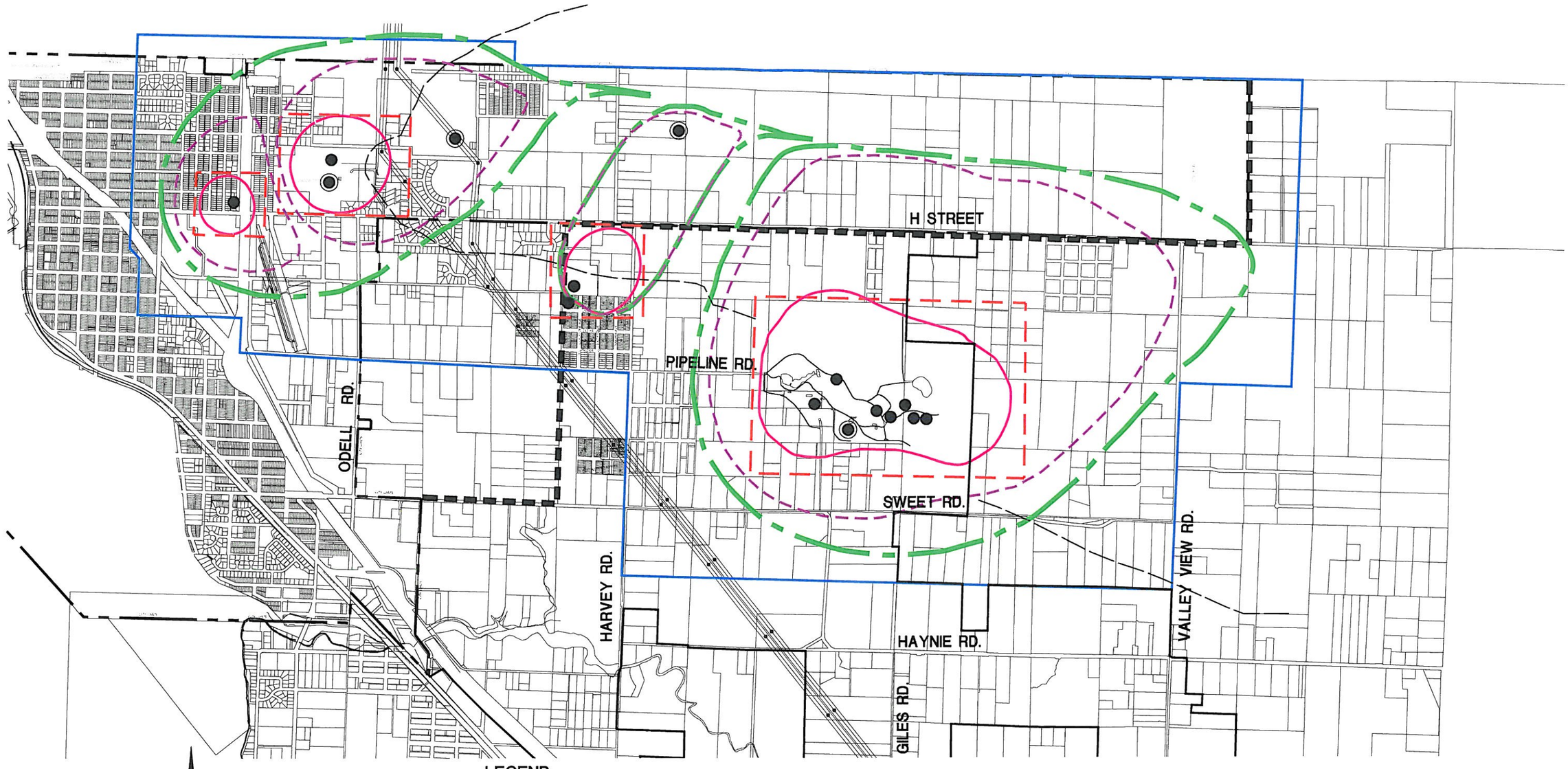

LEGEND

- RESERVOIR
- WELL
- CITY OF BLAINE WATER SERVICE AREA WITHIN CITY LIMITS
- CITY OF BLAINE WATER SERVICE AREA OUTSIDE CITY LIMITS
- UGA BOUNDARY
- BOUNDARY UPLAND AREAS
- RECOMMENDED 1-YEAR WELLHEAD PROTECTION AREA
- RECOMMENDED 5-YEAR WELLHEAD PROTECTION AREA
- 1 YEAR TOT
- 5 YEAR TOT
- 10 YEAR TOT

2000 1000 0 2000

SCALE IN FEET

CHS ENGINEERS, LLC

FIGURE BASED ON FIGURE 5-1 FROM CITY OF BLAINE WELLHEAD PROTECTION PROGRAM, GOLDER ASSOCIATES, 11/25/96

CITY OF BLAINE
COMPREHENSIVE WATER SYSTEM PLAN

FIGURE 5.1
RECOMMENDED WELLHEAD PROTECTION AREAS

NOVEMBER 2009

270606\comp plan fig5.DWG 11x17 1=3000 11/30/09

TABLE 5.1
City of Blaine
Zone of Contribution Time of Travel (ft.)

	Well #	Source #	6-Month (ft.)	1-year (ft.)	5-year (ft.)	10-year (ft.)
Zone of Contribution for City of Blaine Wells (TOT)	1	S01	*N/A*	*N/A*	*N/A*	*N/A*
	1R	S10	440	620	1,390	1,970
	2	S02	620	880	1,970	2,780
	3	S03	980	1,390	3,110	4,400
	3R	S11	440	620	1,390	1,970
	4	S04	620	880	1,970	2,780
	4.1	S13	*N/A*	*N/A*	*N/A*	*N/A*
	5	S05	440	620	1,390	1,970
	5.1	S12	*N/A*	371	830	1174
	6	S08	440	620	1,390	1,970
	7	S07	440	620	1,390	1,970
	8	S06	440	620	1,390	1,970
	8.1	*N/A*	*N/A*	*N/A*	*N/A*	*N/A*
	9	*N/A*	*N/A*	*N/A*	*N/A*	*N/A*

The table illustrates the distance a contaminant may travel through the substrate around a particular well for a given period of time. For example, it is projected that it would take a contaminant that was spilled 440 feet from Well #1R six months to reach the well.

5.1.4 Inventory of Potential Sources of Contamination

The purpose of creating an inventory of all potential sources of groundwater contamination in and around the WHPAs is to identify past, present and proposed activities that may pose a threat to the aquifer utilized by the wells. According to the current WHPP, the land-use and contaminant source inventory was compiled by collecting State and local records and conducting a one-day traffic survey of the area. In addition, a sanitary survey of the City's well field area was performed to evaluate the condition of the wells and to determine the susceptibility of the wells to contamination due to well construction deficiencies and possible vandalism.

According to the WHPP, it was determined that the City's water system encompassed three land-use jurisdictions including the City of Blaine, Whatcom County and the Langley District Municipality in Canada. Land-use within the WHPA includes single family residential and commercial within the City of Blaine portion of the WHPA and predominantly rural residential and forest in the Whatcom County portion. However, it should be noted these designations are more than 12-years old and should be updated.

Data collection from multiple sources was summarized into a listing of known and potential contaminant sources as determined from the data research and the traffic survey. The potential contaminant sources that existed within the calculated wellhead protection zones for all of the City's wells included:

- Active underground storage tanks
- Permitted RCRA facilities, which produce 220 pounds or more of hazardous waste or 2.2 pounds or more of extremely hazardous waste
- Gravel quarries
- On-site sewage disposal systems
- Storm water disposal
- Solid waste disposal
- Possible household hazardous waste
- Agricultural and forestry activities
- Roadside spraying
- Abandoned or improperly designed domestic wells, and
- Potential vehicular traffic-related spills

There may be additional contamination sources that are unknown at this time. These could include contamination brought on by new development and contamination from potential vandalism within the well field.

5.1.5 Notification of Findings

It is unclear if State and local agencies were notified of the WHPPs findings including the wellhead protection boundaries. It is also unclear if residents and customers within the TOT zones were notified.

5.1.6 Contingency Plans

The City's WHPP includes contingency planning with well replacement options. The section discusses what can be done in the short-term and the long-term if contamination occurs despite efforts to prevent it. Contingency planning within the WHPP includes:

- Documentation of the existing well capacities and the projected future demands;
- Summarization of the City's existing Water Supply Emergency Response Action Plan (WSERAP), dated July 1995;
- Evaluations of the ability of the existing system to meet demands if City wells become contaminated;
- Identification of potential sources of water that will enhance the present water supply and offset the impact of aquifer contamination including the cost of selected options; and
- Identification of emergency procedures for response to aquifer contamination.

Long-term well replacement options in the WHPP include increasing the source capacity of the existing wells and drilling new wells into the deep aquifer. However, no cost estimates were included in the plan. The City recently drilled two new wells (#5.1 and #8.1). The costs of these wells not including connections to the system, were approximately $185,000 and $215,000 respectfully.

In addition, the option of water re-use is mentioned in the plan in regard to irrigation of the golf course. This alternative would reduce system demands and is already being explored. See Chapter 4 for more information in regard to the City's re-use efforts.

A copy of the City's Water Supply Emergency Response Action Plan (WSERAP) is included in Appendix J.

5.1.7 Spill / Incident Response Measure

The City has no specific emergency spill response plans in place at this time.

5.2 RECOMMENDED IMPROVEMENTS

Although the City's WHPP is more than twelve years old, the report is complete and thorough. As the City brings new wells on-line, it is recommended that the TOT be recalculated for both aquifers as the withdrawal from the deep aquifer is greater than originally modeled and new wells have been constructed that will draw from the shallow aquifer.

It is also recommend that the City revisit and review the current land-use designation with respect to the potential contaminant sources within the TOT zones. In conjunction with this review, it is recommended that the City notify State and local agencies of the wellhead protection boundaries and also notify residents and customers within the TOT zones with a letter discussing the risks to groundwater. These notification letters should include the actions to be taken in case of a spill or accidental contamination. Where applicable, the letter should also include a list of precautions residents and customers can take to minimize impacts from on-site sewage disposal systems.

The WHPP should be updated in 2011 following design and connection of Wells #9 and #8.1.

CHAPTER 6

OPERATION AND MAINTENANCE PROGRAM

The following section summarizes the operation and maintenance procedures, which assure satisfactory management of the water system operations in accordance with WAC 246-290. Ideally, operation and maintenance programs should be assembled in stand-alone documents that clearly outline the day-to-day functions involved in keeping the water system running smoothly and within guidelines. This section is intended to summarize these stand-alone documents when available and provides direction when they are not.

6.1 WATER SYSTEM MANAGEMENT AND PERSONNEL

The City's water system is governed by the City Council, which consists of seven local residents elected at large by the population within the City's boundaries. The Council elects one of the seven to serve the position of Mayor. The City Manager reports to the City Council and oversees all aspects in regard to operation of the City. The City's Public Works Director, who has direct responsibility for the water system, reports to the City Manager. The Public Works Director is responsible for implementation of the Capital Improvement Program (CIP) and public/press contacts. The Public Works Director, along with the City Manager and City Finance Director are responsible for formatting budgets and making recommendations to the City Council. It is ultimately the City Council's responsibility to adopt the water system budget and the implement the CIP.

The day-to-day operation of the water system is carried out under the supervision of the City's Operations Supervisor. The Operations Supervisor must have a Water Distribution Manager Level 2 certification or higher per WAC 246-292-050. This position is specifically responsible for preventive maintenance, field engineering, water quality monitoring, troubleshooting, emergency response, and cross-connection control. The City's Operations Supervisor also coordinates operation of the water system with DOH.

6.2 OPERATOR CERTIFICATION

As described above, the City is required to have, at a minimum, a Water Distribution Manager Level 2 on staff. This position shall be held by a person who is adequately qualified by experience, education, and training to assure responsible operation and maintenance of the water system. Certification as Water Distribution Manager 2 or greater under the provisions of WAC 246-292-060 shall constitute satisfactory evidence of competency.

The City's current Operations Supervisor is certified as a Water Distribution Manager Level 2. In addition, the City also has eight additional people on staff who are certified as Water Distribution Manager Level 1. Aside from the

Operations Supervisor, the City employs three people who are dedicated to the operation of the water system. These positions include a Lead Maintenance Worker and two Maintenance Workers. The Operations Supervisor or his delegate is also the Conservation Manager and Cross Connection Control Program Manager.

The water system is also supported by the City's Compliance Operator and the Sample Operator who work with water quality testing and reporting. In addition, the Compliance Operator produces the City's annual water quality testing report for distribution to customers. The City's Operator/Sampler is the City's certified Cross Connection Control Specialist.

The City requires that all field operators obtain a Distribution Manager Level 1 certification and it has established a program to assist its employees in advancement to these levels. The City pays for tuition, examination fees, and renewal fees for its employees. The Water Department members complete three continuing education units of training or education each year, and they are trained in first aid and flagging.

At times, City staff from the sewer department support the water department when additional personnel are necessary.

6.3 SYSTEM OPERATION AND CONTROL

6.3.1 Major System Components & Operations

The City of Blaine's water system consists of a fully metered distribution system, ten production wells, one water treatment system, five storage reservoirs including four above ground and one in ground, and five booster pump stations (BPS) that supply water to upper pressure zones. The City's system is further detailed and illustrated in Chapter 3.

The water system operates automatically with the exception of the production wells. Water is pumped from the wells within the well field to a common 16-inch pipeline which begins at the chlorination building. At this point, the source water is chlorinated and the water flows by gravity to Reservoir #1. All wells within the watershed flow to this reservoir except Well #6. Well #6 pumps directly into a closed system that serves two houses adjacent to the watershed. Water levels in Reservoir #1 are monitored via visual inspection.

Water is withdrawn by gravity from Reservoir #1 through two transmission mains that travel west toward the downtown area of the City. The 171-pressure zone serves a large percentage of the service area including the core area of the City. An additional 171-zone reservoir (Reservoir #4) is located in Lincoln Park and the water levels in this reservoir are also monitored via visual inspection. Two additional wells are located close to this reservoir. As with the wells in the well field, the operation of these wells is currently not automated.

There are two booster pump stations in close proximity to Reservoir #4. BPS #5, which is located at the base of Reservoir #4, pumps water from the 171-zone to the upper 320-zone. BPS #3 pumps water from the 320-zone to the 440-zone. Reservoir #2, which is the 320-zone reservoir is located northeast of Lincoln Park. Water pressure telemetry within this reservoir controls the pumps in BPS #5. Reservoir #5, which is the 440-zone reservoir, is located east of Reservoir #2. Water pressure telemetry within this reservoir controls the pumps in BPS #2. Water levels in these upper zone reservoirs are monitored via pressure telemetry systems and visual inspection.

The City also maintains pressure-reducing valves (PRV), which allow flow from these higher pressures zones back to the lower zones. There are two PRV stations between the 440 and 320 zones and one station between the 320 and 171 zones. Each of these PRVs is set to be closed under normal operating conditions. Therefore, low pressure conditions on the downstream side causes the valves to open.

For service to the west, the City has a 14-inch pipeline that travels west from the downtown area toward the Semiahmoo Spit. This water main is also connected to the 171-zone and is buried beneath the Drayton Harbor. On the western side of the Harbor, BPS #3 boosts the water pressure to fill the City's 330-zone reservoir (Reservoir #3). This reservoir is located along the higher elevations of the point and serves the residential communities surrounding the Semiahmoo Golf Course. Water pressure telemetry within this reservoir controls the pumps in BPS #3.

Within the 330-zone is the City's 360-zone. This zone is supplied by BPS #4R, which draws from the 330-zone. There is no reservoir within this zone; therefore, the booster pumps pump into closed system. Pressure switches at the pumps regulate the operation of the pumps.

System Operations

Normal operation of the water system includes the following tasks:

- Continuous monitoring of system operations via visual inspection, telemetry and autodialer notification.
- Investigation of unusual operating conditions. The primary indicators of unusual system performance include decreasing or low reservoir levels, unusual demand patterns and low water pressure indications or customer complaints.
- Collection of source production data for daily records.
- Monitoring of booster pump stations and reservoirs. At a minimum, daily visits are made to each pump station. Reservoirs are also generally visited daily. During each visit, operational parameters and material conditions are reviewed.
- Complete distribution system maintenance per work orders generated by Public Works department, for routine operation and maintenance, in

response to customer complaints, for new service installations, or for system repair or upgrade with integrated Job Completion reporting for the records.

- Service meter reading – The City is divided into areas called regions There are approximately 9 regions within the City. Meter reading for the monthly billing occurs over an eight-day cycle.
- Water quality testing – Chlorine residuals are tested each day at 6 locations. Coliform testing is completed monthly at seven locations around the City. In addition, the chlorine residual level is tested at least weekly at the three reservoirs and the points of supply to the Birch Bay Water and Sewer District and the Bell Bay Jackson Water Association.
- Respond to customer calls regarding water quality, quantity, pressure or leak notification
- Conduct "lock-off" of delinquent accounts, as necessary.
- Response to alarms from telemetry and autodialer system (on-call 24 hours).
- Annually send reminder letters to customers with cross-connection control devices and follow-up with customers who are overdue with testing reports.
- Participate in annual training program for safety (e.g., confined space work, trench excavation, flagging and first aid).
- Conduct conservation program activities.

6.3.2 Preventive Maintenance Program

Maintenance manuals for all equipment are kept together at the Public Works Facility. These manuals are available to all persons involved with the servicing of the equipment. Service requirements recommended by the manufacturer shall be followed as a minimum. Depending on usage and age of equipment, more frequent service may be warranted. A service log is kept on all equipment.

Preventive maintenance activities for major system components are as follows:

A. Sources of Supply

1. Daily: Log and record volume delivered and pump motor hours; note if pump on or off, record static water level and discharge pressures.
2. Annually: Calibrate flow recorders.
3. As needed: Paint structures and piping; maintain electrical and hydraulic controls.
4. Changes in water service when off-line: work on only one well at a time and ensure adequate supply in storage before interrupting service.

B. Storage Reservoirs

1. Daily – Check status of reservoir security monitoring system.
2. Weekly: Check security (fencing, gate, vault locks, intrusion sensor). Check exterior condition, paint, vent, hatch, etc.
3. Annually: Clean reservoir interior/exterior; repaint interior and/or exterior as needed (estimated 15- to 20-year frequency).

4. Changes in Water Service when off-line: complete internal inspections during period of low demand.

C. Booster Pump Stations

1. Weekly: Log and record volume delivered and pump motor hours; note if pump on or off, record static, if feasible record suction and discharge pressures. Check motor oil levels, motor noise, temperature, and vibration.
2. Quarterly: Change pump lubricating grease.
3. Biannually: Change motor lubricating grease.
4. Annually: Calibrate flow recorder.
5. As needed: Paint structures and piping; maintain electrical and hydraulic controls.
7. Changes in water service when off-line: work on only one pump at a time, or ensure adequate supply in storage before interrupting service

D. Water Distribution System

1. Water Mains:
   Annually: Flush dead end lines.
2. Valves:
   Three year cycle: uncover where buried; clean out valve boxes, test valves using hydraulic tester, etc.; repair valves as necessary.
3. Hydrants:
   Annually: change out older hydrants, check drain rate; lubricate as necessary; measure pressure; paint as necessary.
4. Pressure Reducing Valves
   Annually: Cycle all valves; check screens and pressure settings; rebuild as necessary.

E. Tools and Equipment

1. Rolling Stock (trucks, backhoe)
   Weekly: Check all fluid levels and brakes.
   As Needed: Replace fluids and filters in accordance with manufacturers' recommendations (or more frequently depending on type of use).
2. Tools:
   Clean after each use; lubricate and maintain as necessary.

F. Cross-Connection Control Devices

1. Annually: Inspect and test.
2. As Needed: Inspect and test as required if failures indicate need; rebuild, overhaul and/or replace if defective.

6.3.3 *Equipment and Supplies*

The Water Department shares the equipment owned by the City. There is a complete array of equipment for operating and maintaining the water system, including:

- Three 4-wheel drive backhoes.
- Two dump trucks and a flatbed trailer.
- Road/shoring plates and trench boxes
- Service vehicles including one fully equipped truck with portable power tools, hand tools, repair materials, sump pump, portable generator and other equipment necessary for small main and service line repairs
- Inventory of water system materials, water main repair materials, spare valves, hydrants, blow-off valves, gasket, repair bands, backfill material, cold-mix asphalt and other materials used in system repairs
- Inventory of water service materials and testing equipment, including meters, setters, corporation stops, meter boxes, repair parts, "Touch-Read" sensor/meter assemblies, "Radio Read" sensors, etc.
- Chlorine for water pipe disinfection and supplemental residual dosing if necessary.
- Dechlorination equipment for water main draining and flushing operations

.

6.4 COMPREHENSIVE MONITORING PLAN

As discussed in Chapter 3, the City is required to monitor the quality of water provided to its customers. As a system that utilizes groundwater for its supply, the City is presently required to monitor its system for the following parameters:

- Coliform bacteria
- Inorganics
- Volatile Organics
- Nitrates
- Radionuclides
- Synthetic Organics
- Lead and copper
- Asbestos
- Distribution system residual disinfectant

The City's testing requirements for the above-mentioned parameters, including testing location and frequency are illustrated in the Table 6.1.

Table 6.1
CITY OF BLAINE
State and Federal Water Quality Testing Requirements

Required Testing	*Location*	*Description*
Total Coliform -	From monitoring locations as specified in Coliform Monitoring Plan	Coliform testing is required monthly. Five (5) samples shall be taken as designated by the Coliform Monitoring Plan and submitted for testing.
Inorganics -	From a point representative of each source	One (1) complete IOC sampling from each source between Jan 2002 and Dec 2010.
Volatile Organics -	From a point representative of each source	One (1) VOC sampling from each source every 3 years.
Nitrates -	From a point representative of each source	Nitrates shall be tested for on a yearly basis. All sources must be tested.
Radionuclide -	From each source	Two (2) samples from each source shall be tested for radionuclide level once every three years.
Lead-Copper -	From the distribution system at targeted sample tap locations	LCR 1 Set of 20 samples between Jan 2008 and Dec 2011.
Synthetic Organics -	From a point representative of each source	Waiver granted until Dec 2007. City to apply for new waiver.

Chlorine residual levels are monitored daily at one or more of the eight sampling station sites located throughout the City and every day at the Public Works Facility. The City takes five (5) routine coliform samples each month from seven different sampling locations within the system. A copy of the City's Coliform Monitoring Plan can be found in Appendix K.

Bacteriological samples shall be analyzed in accordance with methods approved by DOH and only in the State Public Health Laboratory or laboratories holding a current certificate of approval from DOH. Samples taken following water main construction or repair cannot be substituted for compliance with minimum

sampling frequency or used to determine compliance with maximum contaminant level.

The following is an outline of the coliform sampling program:

A. Sample Collecting

Bacteriological samples shall be collected at regular intervals throughout the City. The samples shall be collected, transported and analyzed in accordance with procedures contained in "Standard Methods for Examination of Water and Wastewater". The bacteriological Maximum Contaminant Levels (MCLs), a primary drinking water standard, for coliform bacteria are as follows:

1. A non-acute MCL violation shall consist of the following:
   a. For fewer than 40 samples per month (such as the City); coliform detected in 2 or more samples.
   b. For 40 or more samples per month, coliform detected in 5% or more of the samples.

2. An acute MCL violation shall consist of the following:
   a. Any fecal coliform detected in any repeat sample.
   b. Any E. coli detected in any repeat sample.
   c. Coliform bacteria detected in any repeat sample collected in response to presence in an original sample.

Upon detection of coliform bacteria in any sample, the City must analyze the sample for fecal coliform and E. coli, collect repeat samples, notify DOH at (253) 395-6750 within ten days of notice from the lab of positive detection and determine and correct the cause of the coliform presence.

For the non-acute MCL violation the City must notify DOH as soon as practical or within 30 days (Tier 2 violation). For an acute MCL violation, the City must inform DOH as soon as possible but no later than 24 hours after learning of the violation (Tier 1 violation) in order to determine if additional public notice is required. Public notification is required in the event of Tier 1 violation within 24 hours in a form and manner reasonably calculated to reach all persons served. The requirements for notification to customers are very specific and comprehensive and are detailed in the WAC 246-290, Sections 71001 through 71007.

B. Repeat and Follow-up Sampling

The total coliform rule requires water samples analyzed for coliform bacteria to be reported as presence or absence. Repeat and Follow-Up Sampling is the response to detection of a coliform presence in any drinking water sample. When any drinking water sample analysis results in a coliform presence report, a "set" of repeat samples must be collected within 24 hours of being notified by the lab of the presence determination.

1. A total of three (3) repeat samples, considered a "set", are required within 24 hours of being notified of the presence laboratory analysis.
   a. Collect the first repeat sample from the same location the previous coliform presence sample was taken.
   b. Collect the second repeat sample at a site five (5) service connections in either direction down the distribution pipeline from the previously mentioned coliform presence location.
   c. Collect the third repeat sample from a site within five (5) service connections down the distribution pipeline the other direction (starting from the previously mentioned coliform presence location).

2. The month following a coliform presence sample the City must collect a minimum of five (5) Follow-Up Samples from the distribution system. These Follow-Up Samples include the routine samples normally collected. For reporting and compliance calculations, these samples are considered routine samples.

   If any Repeat or Follow-Up Sample is analyzed with coliform presence then all of the above must be performed for that sample site.

   No Repeat or Follow-Up Sampling is required for samples determined as coliform absence. Also, if a coliform MCL violation has been determined, no additional sets of repeat samples are required for any Repeat Sample with a coliform presence during that month. However, samples may be required by DOH in the investigation of contamination.

The City has been monitoring for lead and copper and has been required to take 20 samples over the three-year testing period which ended in December of 2007. It is believed the 20 samples requirement will continue into the following three-year cycle. Asbestos sampling is required in 2010.

The City initiated testing for Trihalomethanes and Haloacetic Acids in accordance with the EPA's Stage 2 Disinfectants and Disinfection Byproducts Rule (Stage 2 DBPR) in the summer of 2008. The City will be required to develop a monitoring plan for Stage 2 DBPR compliance monitoring by October 2013 and sample the distribution system for each of these disinfection byproducts the following year. Additional monitoring may be required in response to new regulations promulgated by EPA and DOH.

6.5 EMERGENCY RESPONSE PLAN

The City has a general emergency response plan (ERP), which identifies the City's procedures for emergency situations. The current plan identifies the logistics and notification procedures in the event of various types of

emergencies. In response to the events of 9/11/01, the Federal government enacted the Public Health Security and Bio-Terrorism Preparedness and Response Act (HR 3448) requiring preparation of vulnerability assessments and preparation or update of ERPs for public water systems serving populations greater than 3,300 people. The City has prepared a separate vulnerability analysis and a Water System Emergency Response Plan. However, the Water System Emergency Response Plan only identifies procedures for emergencies related to intentional acts of terrorism.

The following discussion summarizes elements within the City's ERP and the Water System Emergency Response Plan.

6.5.1 Water System Personnel Emergency Call-Up List

The City maintains a detailed list of contacts for all City personnel. That list is updated periodically and distributed to all staff. Key water system contacts are summarized in Table 6.1:

Table 6.2
City of Blaine
Emergency Contact Information

Contact	Telephone No.
Emergency	911
City of Blaine – Main Number (Voice message provides emergency contact number for after hours emergencies)	360-332-8311
City of Blaine – Public Works (Voice message provides emergency contact number for after hours emergencies)	360-332-8820
Leroy, Water Department Foreman	360-815-0494 (on-call cell phone)
Washington State Department of Health (Location – City of Kent)	253-395-6750 or 877-481-4901
T.V. Stations (Seattle area) KIRO KOMO KING	 800-777-5476 800-477-5666 206-448-4521
Radio Station (KARI)	360-371-5500
Radio Station (KGMI)	360-734-9790
Whatcom County Emergency Mgmt.	360-676-6681 or 360-714-3507
North Whatcom Fire & Rescue Services – Business	360-371-2533
Whatcom County Fire City No. 7 – Business	360-384-0303

6.5.2 *Notification Procedures*

The City's general ERP outlines the steps that should be taken in case of different types of an emergency situations such as health risk, hazardous situation, natural disaster, security breach, vandalism, terrorism, etc. In summary:

The City's Emergency Management Coordinator acts as the lead for the development and maintenance of City warning procedures. The Emergency Management Coordinator is responsible to develop and distribute emergency public information materials. In addition, City departments shall provide the Emergency Public Information Officer with information concerning emergency activities.

In regard to the operation of the Water System, the responding operator or staff member shall notify their Operations Supervisor immediately. The Operations Supervisor shall notify the Public Works Director or his designee, who in turn will notify the City Manager. The Public Works Director shall invoke the Water System ERP if appropriate and the City's Emergency Management Coordinator will be notified if appropriate.

6.5.3 *Vulnerability Analysis*

A water system's vulnerability assessment identifies areas of the system that are in danger of damage or failure during various types of emergency or threat scenarios. The assessment also evaluates alternative operating modes and provides additional emergency response procedures.

On June 12, 2002, the President of the United States signed the Public Health Security and Bioterrorism Preparedness and Response Act (PL. 107-188). Section 1433(a) of the act requires water systems that serve a population of more than 3,300 people to complete a Vulnerability Assessment (VA). These water purveyors must also certify to the US EPA that the VA has been completed and submit a copy the EPA. In January 2003, the US EPA finalized guidance for preparation of a VA.

The size of the City of Blaine's water system dictates that the City complete a vulnerability assessment. The City has completed the required VA and maintains the information on file at the Public Works Office. The VA contains information specific to City facilities, treatment techniques, and personnel. This information is considered confidential and has been excluded from this plan. The City maintains the information in a separate document that is kept secure by City staff.

6.5.4 *Contingency Operational Plan*

The City's water supply system is operated manually through the control of the City's wells. The City's distribution system is operated automatically via

telemetry and radio communication. If operation of these systems is interrupted, the City staff can operate the distribution system manually. The staff members can control the well pumps manually in response to changes in reservoir levels, and adjustment can be made several times throughout the day as necessary.

There are currently no other options for water to be delivered to the City customers other than the City's own wells. However, the potential exists for limited supply back through one of the newest interties with the Birch Bay Water and Sewer District. At this time, there is a memorandum of agreement (MOA), which allows water to be supplied from this intertie to the City from the District, and there is a mechanism for reimbursement. However there have been no discussions regarding limitations of withdrawal.

The City also has a draft water shortage response plan that identifies different stages and procedures that are to be followed depending on the severity of a water shortage situation.

6.6 SAFETY PROCEDURES

The City maintains a copy of the material and safety data sheets (MSDS) for all water system materials. These records are maintained in the Public Works Building. The City field staff is trained for traffic control/flagging and in the proper operation of City equipment, including vehicles, excavation and shoring equipment, and power and hand tools. The same staff members are trained for safe procedures when working with dry and liquid chlorine for disinfection, PVC solvent and adhesive, paints, thinners, shop cleaning, cutting asbestos cement pipe, working around electrical equipment, etc. All City staff are trained in CPR and first aid.

6.7 CROSS-CONNECTION CONTROL PROGRAM

The City maintains a cross-connection control program through City of Blaine Code *13.04.260 Cross-connections.*

The City's cross-connection control program implements a continuous program of cross-connection investigation, surveillance and control in accordance with the rules and regulations of DOH. Currently, the program consists of having the Operations Supervisor, Cross-Connection Control Specialists, and maintenance workers keep surveillance on the City's service area and investigate any connection which could potentially cause a cross-connection. Testing of new and existing backflow prevention devices is the responsibility of the property owner. This is accomplished by having the owner contact a local certified tester and arrange for him to test the device and submit a report to the City. Annual inspections occur after the City mails a letter directing them to arrange for a certified tester to test the backflow prevention device and submit a report. The City's Cross- Connection Control Specialists (CCS) coordinates the City's cross-connection control program. A copy of the City's cross-connection control program is included as Appendix L.

6.8 CUSTOMER COMPLIANT RESPONSE PROGRAM

The City responds and maintains a record of customer inquiries/complaints as follows:

- Upon receipt of call/inquiry, a work order is generated for attention the Operations Supervisor or someone designated by him.
- The responding staff member investigates and, if appropriate, addresses the issue (most often related to pressure or need for flushing in service or distribution mains).
- The Operations Supervisor is advised of the outcome of all investigations and the Public Works Director is notified, if appropriate.
- Response is then documented on the work order as noted above.

6.9 RECORD KEEPING / REPORTING

DOH has enacted regulations that address record keeping and reporting. These regulations (WAC 246-290-480) stipulate that results of water quality testing, operational reports, and other documents related to compliance be maintained and made available to the system's customers and the appropriate regulatory agencies. The following presents an overview of the City's record keeping and reporting procedures.

Record Keeping

DOH requires the City to retain critical records dealing with operations and water quality issues. An overview of requirements as they pertain to the City's water system is as follows:

- Bacteriological test results shall be kept 5 years.
- Chemical test results shall be kept as long as the system is in operation.
- Records of Daily source meter reading shall be kept 10 years.
- Other records of operation and analysis shall be kept 3 years.
- Records of action taken to correct violations of primary drinking water standards shall be kept no less than 3 years after the last corrective action is taken.
- Copies of written reports and summaries or communication in regard to sanitary surveys shall be kept 10 years.
- Copies of project reports, construction documents, and related drawings shall be kept for the life of the facility.
- Daily testing records for Chlorine residuals, fluoride levels, treatment plant performance, turbidity, and source meter reading shall be kept a minimum of 3 years.
- Notifications under WAC 246-290, Part 7, Subpart A and under 40 CFR 141.33(e) shall be kept for at least 3 years after issuance.

Water Reporting

DOH requires the City to conduct monthly and/or annual reporting of certain data and testing results. More immediate reporting is required for instances where testing results fail to comply with national primary drinking water standards. An overview of requirements as they pertain to the City's water system is as follows:

- Unless otherwise specified, the City shall report to the DOH within 48 hours any failure to comply with national primary drinking water standards. Violations pertaining to the detection of fecal coliform or E. coli (Tier 1): DOH shall be notified as soon as possible but no later than 24 hours.
- Water Facilities Inventory forms shall be updated annually.
- Disinfection byproducts sampling results shall be reported quarterly.
- Systems required to monitor daily disinfectant residuals shall provide monthly reports to DOH.

City Records

The following records are maintained by the City at the designated locations.

Public Works Building

- Work orders – paper files and electronic files
- Meter, valve, hydrant information – paper files
- Vehicle and equipment – paper files and electronic files
- Fire flow test records – paper files

City Administrative

- Water use records – source of supply and delivered
- Customer accounts – billing and usage information
- Service meter notation – billing system

The Federal Safe Drinking Water Act Consumer Confidence Rule (finalized August 1998) requires that water utilities provide an annual water quality report to their customers. The City has completed these annual reports every year since 1999. A copy of the latest Consumer Confidence Report is included in Appendix E.

6.10 RECOMMENDED O & M IMPROVEMENTS

The following revised or additional water system operation and maintenance measures are recommended:

171-zone Storage Reservoir

The reservoir's internal coating shall be inspected annually and should be considered for replacement. Once replacement of the coating occurs, the inspection of the coating can return to a two-year cycle.

CHAPTER 7

DESIGN AND CONSTRUCTION STANDARDS

The objective of this chapter is to describe the City of Blaine's design and construction standards as they apply to the water system. The inclusion of the design and construction standards into this document enables the City to utilize an alternative review and approval process from DOH for distribution-related projects. The alternative review process allows the City to approve individual project reports and construction documents for distribution main and other distribution-related facilities that are consistent with his chapter without written approval from the Department of Health. The City is still responsible for complying with all applicable sections of the regulations, including the project report and construction document requirements listed under WAC 246-290-110 and 246-290-120.

Eligible distribution-related projects include distribution reservoirs/storage tanks, booster pump facilities, transmission mains, distribution mains, pipe linings and tank coatings. The water system standards must be at least as stringent as those discussed in Chapter 246-290 WAC.

7.1 PROJECT REVIEW PROCEDURES

The City requires all construction activities related to the City's water system to be coordinated directly through the City. All water main extensions shall be reviewed by the City's Engineer through the City's development review process. This includes all water system-related projects within the water service boundary whether the project is within or outside of the City limits. In addition, City staff and the City Engineer shall also review all projects within the City's water service boundary that are proposed by Whatcom County and any other jurisdictions, when they have a possibility of affecting City's water system facilities. Procedures relating to the development review process can be found in the City's current version of the *Development Guidelines and Public Works Standards.*

7.2 POLICIES AND REQUIREMENTS FOR OUTSIDE PARTIES

Policies set forth for development are described in Chapter 1, Section 1.10, Service Area Policies, and Section 1.11, Conditions of Service of this plan.

7.3 DESIGN STANDARDS

The City has had and will continue to have extensions of the water system on and off private property to meet the needs of new residential and commercial development.

The City has established certain standards for extension of water mains within the water service area. The standard forms and requirements can be found in

the City's *Development Guidelines and Public Works Standards* document. These standards are updated periodically, with the last revision in 1997. A portion of the City's design standards and construction specifications related to the water system are contained in Appendix M.

By reference, the *Development Guidelines and Public Works Standards,* in its entirety, is incorporated in this plan. Current copies of the *Development Guidelines and Public Works Standards* are available for review at the City's Public Works office or on-line on the City's web page.

An abbreviated summary of the City's design standards, as they pertain to the water system, is provided below.

7.3.1 General Standards

For all extensions to the water system, the design detail, workmanship, and materials shall be in accordance with the current edition of the following, except where Blaine Municipal Code (BMC) standards provide otherwise. (BMC 12.20.010).

- Water System Design Manual, Washington State Department of Health
- Standards of the American Water Works Association.
- "Standard Specifications for Road, Bridge and Municipal Construction (WSDOT/APWA) including APWA Supplement, latest edition.
- All standards written and promulgated by the Washington State Chapter of the American Public Works Association
- IAPMO's Uniform Plumbing Code and Installation Standards
- ICC's International Building Code

All extensions to the water system must conform to the standards of the City and the requirements of the County and State Departments of Health. In general, the developer is required to construct the water lines through his property in order to allow for future extension, expansion and continuation of the City's distribution system and/or for conformance with the Comprehensive Water System Plan.

The City and its consultants do not insure the correctness of the information supplied to the developer from the City's records. The developer shall verify by survey any information provided by the City prior to using the information in design or construction.

7.3.2 Construction Drawings and Specifications

Detailed plans shall be prepared by a licensed engineer and must be submitted to the City for plan review and approved prior to the commencement of any construction. Applicant's engineer shall be a Professional Engineer, registered as such in the State of Washington. All plans must be signed and stamped by the applicant's engineer prior to submittal for plan review. Final plans shall be approved by the Public Works Director prior to the start of construction.

Three bound copies of the plans are required to be submitted along with a completed Plan Review Application form and a "Request for Services" form. All drawings shall be on 24" x 36" sheet size. Original sheets shall be good quality reproducible ink on mylar. (Ink on velum is acceptable when CAD asbuilt drawings will be replotted on mylar). Original drawings of the approved plan shall become the property of the City of Blaine. A reproducible set of the drawings will be returned to the applicant's engineer.

Plans and profile drawings are required for all proposed transportation-related improvements; street illumination; traffic signalization; storm drainage facilities; sewer and water improvements and electrical system improvements. For specific minimum requirements, see the City's Plan Checklists within the *Development Guidelines and Public Works Standards*. On occasion, the scope of a project (i.e., relocating one hydrant) may not require engineered plans and can instead be handled via a Right-of-Way Use Permit. This option will be decided during Site Plan Review.

Specifications shall be required and submitted with the plans if General Notes do not adequately cover the project requirements.

Upon completion of the project and prior to acceptance of any public facilities, a complete set of as-built plans of the facility shall be submitted for review and acceptance. All drawings shall be on 24" x 36" sheet size. One set of as-built originals shall be supplied as good quality reproducible ink on mylar. One set of as-built prints and one set of digital media shall be supplied in addition.

7.3.3 Plan Review

All plans are to be submitted to the City Engineering Department along with a completed Plan Review Application form and a signed City of Blaine Customer Service Request form. Any necessary easements or dedications shall be submitted for review along with the plans. A cursory check of the plans against the plans checklist will be made by City staff. If the plans meet the minimum checklist requirements as to context, they will be routed to the appropriate City staff and the plan review process begins.

Plans that have been approved more than one year before construction begins (i.e., a pre-construction meeting scheduled and inspection fees paid) shall be subject to a supplemental review based on the hourly rate as established for third submittal.

7.3.4 Permits

A Right-of-Way Use Permit shall be obtained before any person, firm or corporation shall commence or permit any other person, firm or corporation to commence any work to grade, pave, level, alter, construct, repair, remove, excavate or place any pavement, sidewalk, crosswalk, curb, driveway, gutter,

drain, sewer, water, conduit, tank, vault, street banner or any other structure, utility or improvement located over, under or upon any public right-of-way or easement in the City of Blaine, or place any structure, building, barricade, material, earth, gravel, rock, debris or any other material or thing tending to obstruct, damage, disturb, occupy, or interfere with the free use thereof or any improvement situate therein, or cause a dangerous condition. A separate permit shall be obtained for each separate project.

7.3.5 Utility Locations

Utilities within a right-of-way or easement on new roads or in roadways where existing utilities are not in conflict, shall be located as shown in the typical sections illustrated in Drawing 4-10 of the *Development Guidelines and Public Works Standards*. Where existing utilities are in place, new utilities shall conform to these standards as nearly as practical and yet be compatible with the existing installations. Deviations of location shall be approved by the City Engineer. Existing utilities shall be shown using the best information available. This verification may require exploration/excavation (potholing) if utilities are in conflict with proposed design. The contractor/developer shall be responsible for utility locates in conjunction with their project until final Public Works approval is given.

All new utilities other than those located on private property shall comply with provisions as set forth in BMC 13.04 for water, BMC 13.08 for sewer, BMC 13.16 for electrical, and provisions as set forth in franchise or use agreements between the City and the utility.

7.3.6 Easements

Where public utilities and/or their conveyance systems cross private lands, an easement must be granted to the City. The Engineering Department will generally process, record and file all easements. If the property is platted, the easement may be conveyed when the short plat or final plat is filed. All easements not shown on a plat must be prepared by a licensed land surveyor or engineering firm capable of performing such work.

7.3.7 Pressure

A minimum of 30 psi will be provided at customer meters during normal and peak hour conditions. Systems will be designed to minimize pressure fluctuations between normal and peak hourly design conditions.

Customers of new service connections where normal pressure may exceed 80 psi will be notified of this pressure and will be advised that the installation of a pressure-reducing valve is recommended. The cost, ownership and responsibility for maintaining this PRV will be the customer's.

During fire flow conditions, the pressure at any major risk location and in the remainder of the system will be no less than 20 psi.

7.3.8 Velocities

Water line size shall be as necessary to allow minimum required fire flow and demand, whichever is greater, with maximum velocity of 8 feet per second.

7.3.9 Pipe Size and Layout

Water mains shall be sized to provide adequate domestic plus fire flow, during MDD conditions, at the required residual pressure. The International Fire Code, as amended and adopted by the City, will be used to determine fire flow requirements. However, the quantity of water required will in no case be less than 750 gpm at 20-psi residual pressure.

The minimum water main size shall be 4 inches in a cul-de-sac under 600 feet in length, 6 inches in diameter on a looped system, and 8 inches in diameter for a dead-end as long as fire flow requirements can be met. Nothing shall preclude the City from requiring the installation of a larger sized main if the City determines a larger size is needed to meet fire protection requirements or for future service. No dead-end 8-inch main shall be longer than 1,200 lineal feet.

All water mains shall be designed to lie in a public road right-of-way to the maximum extent feasible or, if not available, within a recorded utility easement dedicated specifically to the City.

Where applicable, the water system shall be designed with "loops" within the development and/or multiple connections to the existing system. Pipe shall be designed for maximum trench depth of 48 inches and a minimum depth to top of pipe of 36 inches. All pipe shall maintain a positive or negative slope between respective high and low points in the water line. High points shall be fitted with air-vacuum release assemblies and low points shall be fitted with flushing assemblies as determined necessary by the City.

7.3.10 Domestic Water Services

All service connections relating to new development may be installed by the developer, subject to the approval of the City, at the time of mainline construction. After the lines have been constructed, tested and approved the owner may apply for a water meter. The City will install a water meter after the application has been made and all applicable fees have been paid. Water meters will be set only after system is inspected and approved.

When water is desired to a parcel fronting an existing water main but not served by an existing service, an application must be made to the City. Upon approval of the application and payment of all applicable fees, the City will tap the main and install the meter, box, and setter.

7.4 CONSTRUCTION STANDARDS

The portions of the City's current construction standards for materials and methods and the standard details as applicable to the construction of water system appurtenances are included in Appendix M of this plan.

7.5 CONSTRUCTION CERTIFICATION AND FOLLOW-UP PROCEDURES

Work performed for the construction or improvement of City roads and utilities whether by or for a private developer, by City forces, or by a City contractor, shall be done to the satisfaction of the City and in accordance with approved plans. It is emphasized that no work shall be started until such plans are approved. Any revision to such plans shall be approved by the City before being implemented. Failure to receive the City's approval can result in removal or modification of construction at the contractor's or developer's expense to bring it into conformance with approved plans.

All work performed within the public right-of-way or easements, or as described in these standards, whether by or for a private developer, by City forces, or by a City contractor, shall be done to the satisfaction of the City and in accordance with the WSDOT/APWA Standard Specifications, any approved plans and the City's *Development Guidelines and Public Works Standards*. Unless otherwise approved, any revision to construction plans must be approved by the City before being implemented.

It is the responsibility of the developer, contractor, or their agents to notify the City in advance of the commencement of any authorized work. A pre-construction meeting and/or field review shall be required before the commencement of work. Inspection fees shall be paid on or before the pre-construction meeting. Any necessary easements or dedications are required before plan approval.

It is the responsibility of the developer, contractor or their agents to have an approved set of plans and any necessary permits on the job site whenever work is being accomplished.

The City shall have authority to enforce these standards as well as other referenced or pertinent specifications. The City will appoint project engineers, assistants and inspectors as necessary to inspect the work and they will exercise such authority as the City Engineer may delegate.

All specific inspections, test measurements or actions required of all work and materials are set forth in the respective chapters of the City's *Development Guidelines and Public Works Standards*. Tests shall be performed at the developer's or contractor's expense. As-built drawings shall be provided as specified in Section 7.3.2.

Failure to comply with the provisions of the above referenced standards may result in stop work orders, removal of work accomplished, or other penalties as established by ordinance. A project is considered final when the City issues a letter of acceptance to the party responsible for the project. No water meters shall be released for any lot or building served by a project until final acceptance has been granted.

City of Blaine Standard Details

Title	Drawing
Water Main Installation General Notes	6 - A
Vertical Concrete Blocking	6 - 1
Horizontal Thrust Blocking	6 - 2
Concrete Slope Anchor	6 - 3
Tapping Tees	6 - 5
PRV/Meter Vault Access Ladder	6 - 7
Type A Fire Hydrant Installation	6 - 8
Fire Hydrant Guard Post & Valve Marker Post	6 - 9
Standard Blow-Off Assembly	6 – 10
6" Diameter Fire Service (For Future Use)	6 –10A
2" Air & Vacuum Release Valve Assembly	6 - 11
2" Air & Vacuum Release Valve Assembly (12" Main Or Larger)	6 - 11A
1" Air & Vacuum Release Valve Assembly (10" Main Or Smaller)	6 - 11B
Valve Operating Extension	6 - 12
Standard Pressure Reducing Station	6 - 13
1" Single Water Service Connection Detail	6 – 14
3/4" Service Connection Detail	6 – 14A
1" Dual Water Service Connection Detail	6 - 15
Compound Water Meter Inst; 3" to 10" w/optional bypass	6 – 19
Typical Compound Water Meter Installation 3" to 10"	6 – 19A
Typical Turbine Water Meter Installation 3" to 10"	6 - 20
Typical Turbine Water Meter Installation 3" to 10" With Optional Bypass	6 - 20A
Residential Fire Sprinkler Check System	6 - 21
Residential Fire Sprinkler Inside Check System	6 - 22
3/4" to 2" Outside Installed Irrigation or Fire Sprinkler Double Check Valve Assembly	6 - 24
3/4" to 2 ½" Inside Installed Double Check Valve Assembly	6 - 25
Double Check Valve Assembly (Private Installation) (1 ½" & 2" Sizes)	6 - 26
Double Check Valve Assembly (Private Installation) (3" To 6" Sizes)	6 - 27
Double check valve assembly (Private Installation) (8" To 10" Sizes)	6 - 28
Double Check Valve Assembly	6 - 29
Double Check Valve Assembly With Detector (For Fire Lines)	6 - 30
Reduced Pressure Principle Backflow Assembly	6 - 31
Reduced Pressure Principle Backflow Assembly (For Firelines)	6 - 32
Reduced Pressure Principle Backflow Assembly (For Firelines)	6 - 32A
Individual Pressure Reducing Valve Assembly	6 - 33

3" To 10" Meter Installation Domestic & Irrigation ..... 6 - 34
3" TO 10" Domestic & Irrigation Turbine Meter Installation ..... 6 - 35
Tapping Tees ..... 6 - 36

CHAPTER 8

IMPROVEMENT PROGRAM

The purpose of this chapter is to incorporate the system needs previously identified in other chapters into a capital improvement program. The improvement program presented in this chapter has been developed in accordance with the requirements identified in WAC 246-290-100.

The development of a comprehensive plan—and an improvement program—ensures an orderly expansion of the City's water system. The population and water demand forecasts and the existing system analyses that were discussed in previous chapters were used to formulate the following Capital Improvement Plan (CIP). The City's current design criteria were also included in the formation of the plan.

In addition, the existing piping system was reviewed to determine the necessity of replacing older water mains because of material condition' size and the inability of the lines to deliver anticipated future flows. The City's service area was analyzed with respect to areas of expected future growth for the purpose of determining the need for future water main extensions.

8.1 PRIORITIZING PROJECTS

A three-step process was used to develop the City's CIP. These steps included the identification of potential system improvements, the evaluation of the alternatives and, finally, the selection of alternatives for the implementation of the CIP.

8.2 IDENTIFICATION OF SYSTEM IMPROVEMENTS AND ASSESSMENT OF ALTERNATIVES

Each aspect of the water system was analyzed and a list of potential improvements was drafted to address existing or anticipated system deficiencies. When applicable, alternative improvements were developed for each deficiency, with the objective of meeting DOH and City standards, serving the designated land use of the water service area, improving reliability of the water system, and minimizing capital and operating costs.

The following sections summarize and describe the improvements that have been recommended in previous chapters of this plan. Tables 8.1, 8.2 and 8.3 located at the end of this chapter, along with the accompanying figures, list and illustrate the improvement projects that have been identified.

8.2.1 Source of Supply

As described in Section 3.3.1, the City is facing limitations for the withdrawal and distribution of source water due the current well capacities and current water

rights availability. In regard to meeting the projected demands, the City is deficient in capacity to meet the projected MDD of the current year (2009). However, the City is expected to bring two additional wells on-line within the next two years, which will increase the City's pumping capacity. In regard to water rights, the City is expected to need additional rights (instantaneous withdrawal) by the year 2012 in order to meet the projected MDD. Annual withdrawal amounts are expected to reach current allowable amounts in the year 2015. The City is currently working toward securing additional rights and is also working to reduce demands through conservation and, possibly water reuse. However, additional water rights will be required even with the success of these programs. Recommended improvement projects include the completion and connection of Wells #8.1 and #9. Projects related to the completion of these wells are *Capital Improvement Projects SU-3, SU-6 and SU-7.* The City should also continue to aggressively pursue the acquisition of additional water rights. Projects related to the acquisition of additional water rights are represented as *Capital Improvement Project SU-1.*

8.2.2 Water Treatment

As described in Section 3.3.2, the City's chlorine treatment system is at or near capacity during peak-use days. In addition, the system is contained in a building, which houses other equipment, thus corrosion is of a concern. It has been recommended the City conduct a detailed feasibility analysis to review disinfection alternatives in regard to types of treatment, treatment equipment and the location of the facility. Alternatives should consider the feasibility and cost of operation of equipment/system alternatives. In addition, the projected chlorine demands of the City's newly constructed WWTP should be reviewed to determine if there are benefits to a particular system—or components of a system—that meet the chlorine demands of both the Water and Sewer Departments. The replacement of the City's chlorine treatment system is represented as *Capital Improvement Project SU-4.*

8.2.3 Storage

Under current operating conditions, four of the City's five existing storage reservoirs are not adequately sized to meet the required storage volumes per DOH guidelines. However, the addition of Wells #9, #5.1 and #8.1 in conjunction with changes in operational procedures can result in adequate storage volumes in all reservoirs except the 330/360-zone reservoir (Reservoir #3). With the completion of these three wells, and with significant operational changes that reduce the OS volumes, the City is projected to have adequate storage volumes in the 171-zone and minimal, but adequate, volumes in the 320 and 440-zones through the 20-year planning period. The completion of any additional wells, aside from the three previously mentioned, that discharge into the 320-zone or the 440-zone will decrease the required storage volumes of these zones. Therefore, during its six-year planning period, the City's reservoir operation procedures should be amended to reduce the amount of operation storage in each reservoir as much as possible. This will in effect increase standby and

equalizing storage volumes. In addition, the City should also review potential well sites and/or construct additional wells prior to considering the construction of additional reservoirs in these zones.

Additionally, the replacement of the aging concrete Reservoir #1 with a larger facility, in conjunction with increasing the local HGL in the areas close to the well field should be evaluated. At this time, there are two capital improvement projects that are necessary to bring the City into compliance in regard to providing minimum service pressures. Constructing a larger, taller reservoir, that would raise the local area HGL by 25 feet or more could eliminate the need for these projects. However, increasing the HGL requires an extensive hydraulic analysis including the review of well pumps and their ability to supply a higher HGL, review of the gravity line supplying the reservoir and a review of the potential pressure zone boundaries. Additional information on the two needed capital improvement projects can be found in the East Blaine Hydraulic Analysis portion of Section 3.3.6. The project related to the review of replacing Reservoir #1 is represented as *Capital Improvement Project ST-7.*

Investigations into the addition of a second storage facility in the 330-zone or the possibility of construction of a new reservoir located within the 360-zone should also be initiated. At this time, the City does own any land within the 360-zone, therefore, it is assumed a future reservoir would most likely be constructed at the site of the current 330-zone reservoir (*Capital Improvement Project ST-6).*

Currently, the City is deficient in storage for the 330/360-zones by approximately 285,000 gallons. By the year 2029, the estimated deficiency is approximately 468,000 gallons. Previous studies in conjunction with the replacement of BPS #4 reviewed the possibility of increasing the height of the existing 330-zone tank to resolve pressures issues within the 360-zone. Increasing the reservoir height would increase storage volumes; however, it was determined that this was not a feasible option. It is recommended that the City begin collecting daily pumping records at BPS #3 and BPS #4R. Analysis of this data will better define the demands of West Blaine through the summer peak demand season and will provide data vital to the design of an additional reservoir. Work toward the design of a future reservoir should begin immediately, including coordination with BBWSD in regard to their storage needs and the possibility of sharing a facility. However, potential changes in the land use designation and/or UGA limits by the County later in 2009 or in 2010 around Birch Point may be reason to defer confirmation of capital needs in this area.

In regard to the reservoir for East Blaine, the timeline and the size of the facility will be coordinated with the development of the eastern portion of the East Blaine annexation area. The City will work with the developers of this area to determine the timeline for construction of this facility and the booster pump station required to supply the reservoir.

Circulation improvements are recommended for Reservoirs #3, #4 and #5.

8.2.4 *Telemetry Systems*

The City's telemetry systems are adequate in terms of alarms and the activation of booster pump stations. However, the operation of the wells is performed without telemetry and the systems that the City does have are not tied together. With potentially three new wells being brought on-line within the next one to two years, it is recommended that a detailed evaluation be conducted in regard to the existing telemetry systems and the potential to integrate improvements as new systems are designed to accommodate the new wells. At a minimum, the connection of Well #9 will require telemetry in regard to the operation of the well, Reservoir #5 and BPS #2. At this time it is recommended that the wells within the well field be automated in regard to maintaining the level of Reservoir #1 including alarms indicating abnormal withdrawal patterns from the reservoir. The project related to the review of the City's telemetry systems is represented as *Capital Improvement Project SU-8.*

8.2.5 *Distribution/Transmission System*

In regard to the distribution system and the supply of adequate service pressure, there are two required improvements that must be accomplished in order to bring the City into compliance with respect to providing minimum service pressures. These are the construction of a booster station to serve an area within the old Sweet Road Water Association and construction of a water main extension from the 440-zone, which serves the area in close proximity to the north and east of the intersection of Pipeline Road and Harvey Road. The completion of these two projects (*Capital Improvements Projects SU-5 and T/D-2)* are considered a high priority and, once completed, the City will be operating within DOH standards. It should be noted these projects are not necessary if a higher HGL is created in the area of the well field, see storage discussion above.

8.2.6 *Hydraulic Modeling – System Pressure and Fire Flow*

Once the two above-referenced distribution deficiencies are resolved, the remainder of the recommended improvements are projects necessary to meet the increasing demands brought on by anticipated growth. These projects generally focus on the provision of additional source capacity and projects that enhance the movement of water from the well field to the western side of the service area. There are also projects identified in West Blaine that relate to system pressure deficiencies under future demand conditions. The following sections describe the improvements relative to the two hydraulic modeling files, (West Blaine and East Blaine)

<u>West Blaine</u>

As described in the sections above, the City's current system within West Blaine is close to being out of compliance. However, the system is currently meeting the demands of the area. The replacement of BPS #4 and the proposed reconfiguration of the pipe network will improve the performance of the system

and will bring the City within compliance requirements. Therefore, there are no distribution improvements recommended at this time.

East Blaine

As described in detail in Section 3.3.6, the City's system is deficient in its ability to transfer water from the eastern side of the City to meet the demands of the core area of the City along with the high demands of West Blaine and the BBWSD. In simple terms, the transmission pipelines are not large enough to transfer the water, thus the local area HGL and storage volumes are drawn down to meet the demands of the south and west. From this analysis, the following projects are recommend to correct these deficiencies while meeting the projected demands and limiting the dependency on storage volumes under MDD conditions.

Capital Improvement Project T/D-7 encompasses the need to upsize the transmission main from Portal Way north to Hughes Avenue and then east to the east side of Interstate 5. This project would include the construction of a 24-inch pipe for the entire section. From discussions with the City, it is recommended the 24-inch pipe be constructed next to the existing pipe, thus creating parallel pipelines. This allows the City to have additional capacity beyond what is required until such time as the condition of the existing pipe is deemed no longer useful.

After completion of *Capital Improvement Project T/D-7,* the remainder of the transmission main from the termination of *Capital Improvement Project T/D-4* to the well field will be competed in multiple phases. *Capital Improvement Projects T/D-8, T/D-9 and T/D-10* are recommended to complete the installation of this 24-inch pipeline. As with *Capital Improvement Project T/D-10,* these projects encompass the construction of a parallel pipeline, thus providing additional capacity.

8.2.7 Booster Pump Stations

The construction of a small booster station pumping to a new higher pressure-zone is the simplest solution to low system pressures encompassing a small high spot along Haynie Road, close to its intersection with Valley View Road. The booster station would serve approximately 36 properties and would supply domestic flows only. A parallel service line would be constructed along the existing water main and the existing customer services would be transferred to it. This station would be designed to handle the peak flows and would include a redundant service pump. Although the concept of constructing a higher HGL replacement reservoir for Reservoir #1 does alleviate the pressure problem in this area and replaces an aging component of the infrastructure, the construction of a small booster station is viewed a faster, lower cost option. Therefore, this booster station is considered *Capital Improvement Project SU-5* and must be constructed in order for the City to meet DOH standards.

8.3 SELECTION OF ALTERNATIVES

The projects for supply, storage and transmission/distribution improvements are discussed in Section 3.4 and are summarized in Section 8.2 with the accompanying tables and figures. The sequence and scheduling of projects which are to be completed over the next ten years were developed by following a general priority outline balanced with the review of the current and projected financial resources of the City as described in Chapter 9. The considerations in selecting projects include:

a) Current deficiencies with the potential of impacting DOH standards such as minimum pressure requirements and water quality.
b) Current deficiencies limiting supply of MDD and PHD within the system.
c) Forecasted deficiencies in source of supply and storage capacities.
d) Current deficiencies in delivering fire flow to areas within the City's existing service area.
e) Anticipated growth and expansion of the existing water service area.

8.4 CAPITAL IMPROVEMENT PLAN AND SCHEDULE

The following tables and figures illustrate the projects that have been selected to address current deficiencies and to accommodate the forecasted growth in the system over the next twenty years. Additional projects are included that provide for the orderly expansion and improvement of the system in accordance with the standards discussed in Chapter 3.

Table 8.1 presents those projects, which are necessary to address current deficiencies, to accommodate growth for the 20-year planning period and to provide extension of service throughout the water service area (except for local extensions). Table 8.1 is a general summary and is presented as a list of information only. Table 8.2 presents planning documents that should be updated and/or completed.

Table 8.3 presents those projects that have been proposed for completion within the next ten years. The table includes the physical construction projects as well as the required planning documents. When applicable, the table also provides a map location identifier that coincides with the locations illustrated in Figures 8.1 and 8.2.

Project Cost Estimates

Cost estimates involve an engineering judgment based on experience; however, construction costs can vary widely due to many factors which cannot be predicted such as labor availability, competitive conditions, economic conditions,

final location of the project, current management, environmental considerations and other intangibles affecting design and construction costs at the time the work is actually performed. Generally, actual costs still may not be known until construction bids are received and even those may be subject to adjustment because of changed conditions encountered during construction. The City, in its decision-making, must always keep in mind that the costs presented in these tables are estimates.

Construction costs are estimated from prices obtained from various sources, including manufacturers, suppliers of materials and equipment and bid prices for similar projects in other communities throughout the area. In considering these estimates, it is important to realize that changes during final design will alter the total cost to some degree and future changes in the cost of material, labor and equipment will also have a direct impact. Prior to the initiation of the projects shown in this CIP, the project costs should be reviewed and updated to reflect current conditions.

The cost estimates presented are based on 2009 prices and represent estimated total project costs. For a future reference point, the Engineering News Record Construction Cost Index for Seattle is 8652 (September, 2009). Project costs are developed from estimated construction costs plus allied costs. Allied costs are generally estimated as 50% of the estimated construction cost and represent costs for permitting, surveying, engineering design and observation, inspection, administration, legal and other project-related costs, including 15% contingency and 8.4% sales tax.

Operation and maintenance costs are not reflected in the project cost estimates. However, these costs are important and require consideration during the design phase of a proposed facility or project to compare alternatives and to assist in financial planning.

8.5 IMPROVEMENT PROJECT FUNDING

As further detailed in Chapter 9, it has been determined that all capital improvement projects scheduled for the next 10 years will be funded through a combination of general facility charges and possibly State-funded low interest loans. It is not possible to accurately predict the annual revenue from general facility charges or the success of loan applications that may be submitted in a particular year. Therefore, the sequencing and scheduling of projects has been performed in careful consideration of future revenue, which may not be realized by the City.

Table 8.1
City of Blaine
CAPITAL PROJECTS

ID	Capital Improvement	Project Description	Page Where Need Identified	Estimated Project Cost (2009)	Recommended Year of Completion
I. SUPPLY / TREATMENT					
SU-1	New Source	Water Rights and Water Supply (hydrogeological studies, well drilling, applications, cost reimbursement program, etc., joint with BBWSD)	3-20, 3-55	$ 300,000	2010-2012
SU-2	Well Field Pressure Zone Study & Improvements	Review of alternatives and project implementation to create higher pressure zone in well field for local service and to eliminate Well #6. Results possibly affect projects SU-3 and T/D-2.	3-51, 3-59	$ 120,000	2010
SU-3	New Source	Connection of Well #9 to 440 pressure zone. Includes review of well condition/performance. Add 440 to 171 zone connection in Lincoln Park, with PRV.	3-20, 3-55	$ 306,000	2010
SU-4	Replacement of Chlorination Treatment System	Replacement of chlorination building and chlorination equipment including engineering evaluation of treatment alternatives and facility location. Additional item includes generator for powering one well.	3-24, 3-56	$ 251,000	2010
SU-5	Booster Station w/ Back-up Power	Based on results of Project SU-2, City will determine if this project is necessary.	3-51, 3-59	$ 371,000	2011
SU-6	New Source	Upgrade of Well 5.1, including capacity increase, VFD power and telemetry connection.	3-20, 3-56	$ 125,000	2011
SU-7	New Source	Completion of Well #8.1 including pump selection and connection to system	3-20, 3-55	$ 261,000	2011
SU-8	Telemetry System	Telemetry system upgrades including telemetry system for Well #9 tying operation of Well #9, BPS #3 and RES #5	3-36, 3-58	$ 60,000	2011
SU-9	Source	Rehabilitation or reconstruction of Well #2 and possibly other wells within the well field	3-14, 3-55	$ 50,000	2013
		Subtotal for Supply Projects		**$ 1,844,000**	

Table 8.1
City of Blaine
CAPITAL PROJECTS, *continued*

ID	Capital Improvement	Project Description	Page Where Need Identified	Estimated Project Cost (2009)	Recommended Year of Completion
II. STORAGE					
ST-1	Reservoir Upgrade	Reservoir #5 Circulation Improvements	3-27	$ 35,000	2010
ST-2	Reservoir	Construction of East Blaine (630-zone) storage reservoir. Completion	3-33, 3-58	$ 2,510,000	2011
ST-3	Reservoir Upgrade	Reservoir #4 Circulation Improvements	3-27	$ 35,000	2011
ST-4	Reservoir Upgrade	Reservoir #3 Circulation Improvements	3-27	$ 35,000	2012
ST-5	Reservoir Upgrade	Reservoir #2 Drain Line modification (with future road project)	3-25, 3-56	$ 50,000	2013
ST-6	Reservoir	Construction of additional 330-zone storage reservoir.	3-31, 3-58	$ 5,622,000	2014
ST-7	Reservoir Upgrade	Replacement of Reservoir #1 (See Project SU-2).	3-51, 3-56	$ 4,518,000	2015
		Subtotal for Storage Projects		**$ 12,805,000**	
III. TRANSMISSION/DISTRIBUTION					
T/D-1	Harvey Road to Pipeline Road Main Extension	Extension of existing water line (approx. 1,400 ft.) along Harvey Rd. south of H St. to intersection of Pipeline Rd.	3-52, 3-59	$ 251,000	2010
T/D-2	Pipeline Road Main Extension	Extension of main from intersection of Harvey Road and Pipeline Road continuing east along Pipeline Rd. to entrance of City's well field	3-52, 3-59	$ 311,000	2010
T/D-3	9th Street Replacement	Replacement of approximately 400 linear feet of existing 6" main with 8" D.I. in conjunction with City's pavement replacement plan. Pipe	3-59	$ 50,000	2010
T/D-4	B Street Replacement	Replacement of approximately 900 linear feet of existing 6" main with 8" D.I. in conjunction with City's pavement replacement plan. Pipe	3-59	$ 110,000	2010
T/D-5	4th Street Replacement	Replacement of approximately 800 linear feet of existing 6" main with 8" D.I. Replacement of approximately 100 linear feet of existing 8"	3-59	$ 115,000	2010
T/D-6	Cathodic Protection	Cathodic protection for harbor crossing	3-43, 3-59	$ 50,000	2011

Table 8.1
City of Blaine
CAPITAL PROJECTS, *continued*

ID	Capital Improvement	Project Description	Page Where Need Identified	Estimated Project Cost (2009)	Recommended Year of Completion
T/D-7	Bell Road/Hughes Avenue Replacement	Replacement of transmission main from Portal Way north to Hughes Ave., then east to east side of Interstate 5.	3-53, 3-60	$ 841,000	2011
T/D-8	Sweet Road Upsizing - Phase 1	Upsize main along Sweet Rd. from termination of Project T/D-3 east (approx. 3,867 ft.) toward well field.	3-54, 3-60	$ 1,255,000	2013
T/D-9	Sweet Road Upsizing - Phase 2	Upsize main along Sweet Rd. from termination of Project T/D-5 east (approx. 3,867 ft.) toward well field.	3-54, 3-60	$ 1,255,000	2015
T/D-10	Sweet Road Upsizing - Phase 3	Upsize main along Sweet Rd. from termination of Project T/D-6 east and north (approx. 3,866 ft.) to well field.	3-54, 3-60	$ 1,255,000	2017
T/D-11	E Street Replacement	Replacement of approximately 400 linear feet of existing 6" main with 8" D.I. Replacement of approximately 800 linear feet of existing 8"	3-59	$ 146,000	2016-2030 (w/ Road Work)
T/D-12	Cedar Street Replacement	Replacement of approximately 1,500 linear feet of existing 4" main, 400 linear feet of existing 6" main, and 200 linear feet of existing 1"	3-59	$ 251,000	2016-2030 (w/ Road Work)
T/D-13	11th Street Replacement	Replacement of approximately 2,200 linear of existing 6" main with 8" D.I. Replacement of approximately 300 linear feet of existing 8" main.	3-59	$ 412,000	2016-2030 (w/ Road Work)
		Subtotal for Transmission/Distribution Projects		**$ 6,302,000**	

Table 8.1
City of Blaine
CAPITAL PROJECTS *continued*

ID	Capital Improvement	Project Description	Page Where Need Identified	Estimated Project Cost (2009)	Recommended Year of Completion
IV. BOOSTER PUMP STATIONS					
BPS-1	Booster Station	Construction of 630-zone BPS	3-33, 3-61	$ 1,205,000	2010
BPS-2	Booster Station Upgrade	Addition of standby power generator at Lincoln Park for BPS #2 and #5	3-47, 3-61	$ 115,000	2011
		Subtotal for Booster Pump Station Projects		**$ 1,320,000**	

CIP Grand Total **$ 22,271,000**

Table 8.2
City of Blaine
SCHEDULED PLANNING PROJECTS

ID	Capital Improvement	Project Description	Page Where Need Identified	Estimated Project Cost (2009)	Recommended Year of Completion
V. PLANNING/OTHER					
P-1	Other	Update Hydraulic Model	3-60	$ 15,000	2010
P-2	DOH Required Plan	Well Monitoring Program as required by DOH	4-19, 4-20	$ 10,000	2010
P-3	DOH Required Plan	Completion/update of Wellhead Protection Program	5-6	$ 20,000	2011
P-4	DOH Required Plan	Comprehensive Plan Update	N/A	$ 100,000	2014
		Total for Scheduled Planning Efforts		**$ 145,000**	

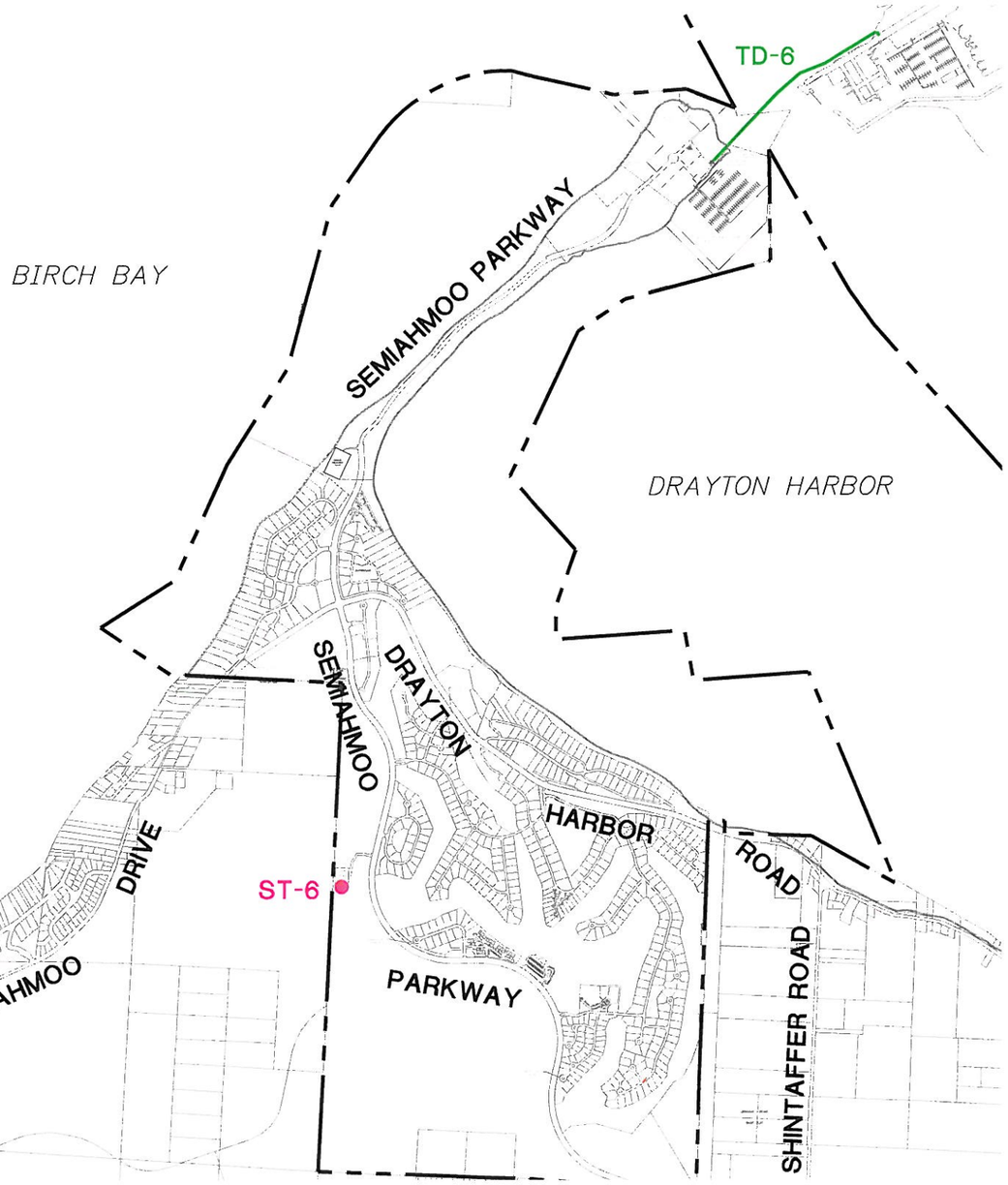

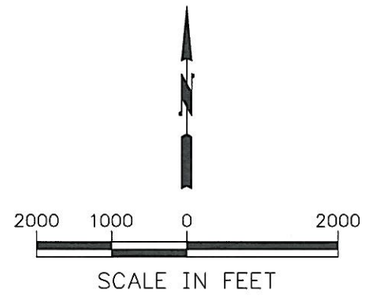

TD-6 — CATHODIC PROTECTION FOR HARBOR CROSSING

ST-6 — CONSTRUCTION OF ADDITIONAL 330-ZONE STORAGE RESERVOIR

CITY OF BLAINE
COMPREHENSIVE WATER SYSTEM PLAN

FIGURE 8.1-a

CIP PROJECTS MAP

NOVEMBER 2009

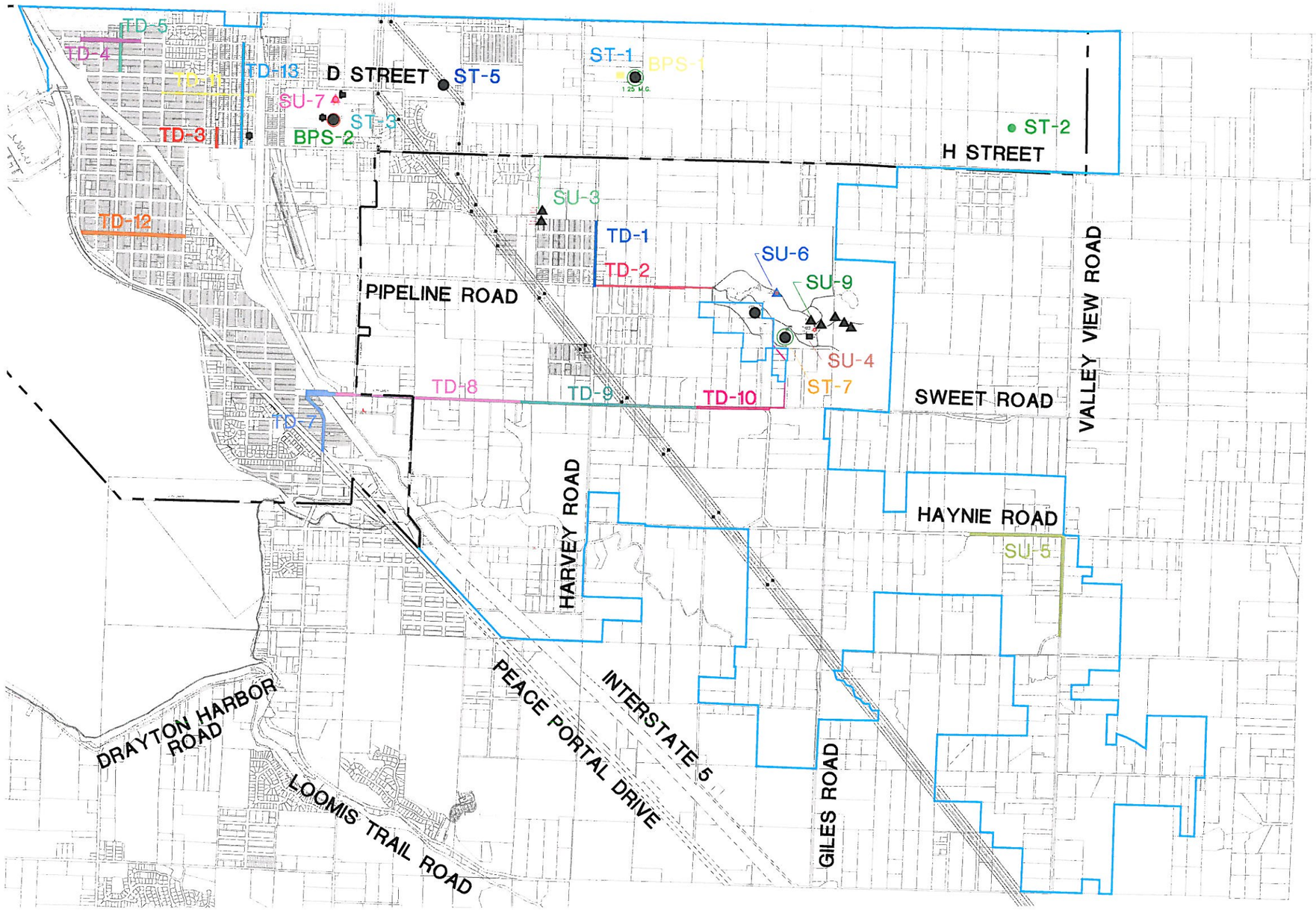

2500 1250 0 2500

SCALE IN FEET

BPS-1	BOOSTER STATION (630-ZONE)
BPS-2	STANDBY POWER FOR BPS #2 AND #5
ST-1	RESERVOIR #5 CIRCULATION
ST-2	EAST BLAINE RESERVOIR
ST-3	RESERVATION #4 CIRCULATION
ST-4	RESERVATION #3 CIRCULATION
ST-5	UPGRADES AT RESERVOIR #2
ST-7	REPLACEMENT OF RESERVOIR #1
SU-3	CONNECTION OF WELL #9
SU-4	REPLACEMENT OF CHLORINATION TREATMENT SYSTEM
SU-5	BOOSTER STATION W/ BACKUP POWER
SU-6	INCREASE CAPACITY OF WELL #5.1
SU-7	COMPLETION OF WELL #8.1
SU-9	REHABILITATION OR REPLACEMENT OF WELL #2

- EXISTING BOOSTER STATION
- EXISTING WELL
- EXISTING RESERVOIR

TD-1	HARVEY ROAD TO PIPELINE ROAD EXTENSION
TD-2	PIPELINE ROAD MAIN EXTENSION
TD-3	9TH STREET REPLACEMENT
TD-4	B STREET REPLACEMENT
TD-5	4TH STREET REPLACEMENT
TD-7	BELL ROAD/HUGHES AVENUE MAIN REPLACEMENT
TD-8	SWEET RD TRANSMISSION MAIN UPSIZE – PH 1
TD-9	SWEET RD TRANSMISSION MAIN UPSIZE – PH 2
TD-10	SWEET RD TRANSMISSION MAIN UPSIZE – PH 3
TD-11	E STREET REPLACEMENT
TD-12	CEDAR STREET REPLACEMENT
TD-13	11TH STREET REPLACEMENT

CITY OF BLAINE
COMPREHENSIVE WATER SYSTEM PLAN

FIGURE 8.1-b

CIP PROJECTS MAP

NOVEMBER 2009

Table 8.3
City of Blaine
10 YEAR WATER CAPITAL IMPROVEMENT PROJECTS

	Projects		ID	2009	2010	2011	2012	2013	2014	2015	2016	2017	2018	TOTAL
	Water Supply Improvements													
1	Water Rights, Water Supply, Hydrogeological Study (Joint w/ BBWSD)	Growth	SU-1				300,000							300,000
2	Well Field Pressure Zone Study (*see Note 1)*	Existing	SU-2		120,000									120,000
3	New Source - Well 9	Growth	SU-3		306,000									
4	Replacement of Chlorination Treatment System	Existing/Growth	SU-4		251,000									
5	Booster Station w/ Back-up Power *(see Note 1)*	Existing	Su-5			371,000								371,000
6	New Source - Well 5.1 upgrade	Growth	SU-6			125,000								125,000
7	New Source - Well 8.1	Growth	SU-7			261,000								261,000
8	Telemetry System	Existing	SU-8			60,000								60,000
9	Rehab or reconst of Well 2	Existing/Growth	SU-9					50,000						50,000
	SUB-TOTAL			**-**	**677,000**	**817,000**	**300,000**	**50,000**	**-**	**-**	**-**	**-**	**-**	**1,287,000**

	Projects		ID	2009	2010	2011	2012	2013	2014	2015	2016	2017	2018	TOTAL
	Distribution Systems Improvements													
10	Harvey Road to Pipeline Road Main Extension	Growth	T/D-1		251,000									251,000
11	Pipeline Road Main Extension *(see Note 1)*	Existing	T/D-2		311,000									311,000
12	9th Street Replacement	Existing/Growth	T/D-3		50,000									50,000
13	B Street Replacement	Existing/Growth	T/D-4		110,000									
14	4th Street Replacement	Existing/Growth	T/D-5		115,000									115,000
15	Cathodic Protection for Harbor Crossing	Existing	T/D-6			50,000								50,000
16	Bell Road/Hughes Road Replacement	Growth	T/D-7			841,000								841,000
17	Sweet Road Upsizing - Phase 1	Growth	T/D-8					1,255,000						1,255,000
18	Sweet Road Upsizing - Phase 2	Growth	T/D-9							125,000				125,000
19	Sweet Road Upsizing - Phase 3	Growth	T/D-10									125,000		125,000
20	E Street Replacement	Existing/Growth	T/D-11								146,000			146,000
21	Cedar Street Replacement	Existing/Growth	T/D-12								251,000			251,000
22	11th Street Replacement	Existing/Growth	T/D-13								412,000			412,000
23	Construction of 630-Zone BPS	Growth	BPS-1		1,205,000									1,205,000
24	Standby Power Generator at Lincoln Park for BPS #2 and #5	Existing	BPS-2			115,000								115,000
25	Water Distribution Extension (East Blaine) LIDs	Growth	-	800,000	900,000	1,000,000	1,000,000	1,000,000	1,000,000	1,000,000	1,000,000	1,000,000	1,000,000	9,700,000
	SUB-TOTAL			**800,000**	**2,942,000**	**2,006,000**	**1,000,000**	**2,255,000**	**1,000,000**	**1,125,000**	**1,809,000**	**1,125,000**	**1,000,000**	**14,952,000**

	Projects		ID	2009	2010	2011	2012	2013	2014	2015	2016	2017	2018	TOTAL
	Storage Improvements													
26	Reservoir #5 Improvements	Existing	ST-1		35,000									35,000
27	Reservoir for 630 Zone	Growth	ST-2			2,510,000								2,510,000
28	Reservoir #4 Improvements	Existing	ST-3			35,000								35,000
29	Reservoir #3 Improvements	Existing	ST-4				35,000							
30	Reservoir #2 Improvements	Existing	ST-5					50,000						
31	Reservoir for 330 Zone	Growth	ST-6						5,622,000					
32	Reservoir #1 Replacement	Existing/Growth	ST-7							4,518,000				4,518,000
	SUB-TOTAL			**-**	**35,000**	**2,545,000**	**35,000**	**50,000**	**5,622,000**	**4,518,000**	**-**	**-**	**-**	**7,098,000**

	Projects		ID	2009	2010	2011	2012	2013	2014	2015	2016	2017	2018	TOTAL
	Planning/Other Projects													
33	Hydraulic Model Update	Existing	P-1		15,000									15,000
34	Well Monitoring Program	Existing	P-2		10,000									10,000
35	Completion/Update of Wellhead Protection Program	Existing	P-3			20,000								20,000
36	Comprehensive Plan Update	Existing	P-4						100,000					100,000
	SUB-TOTAL			**-**	**25,000**	**20,000**	**-**	**-**	**100,000**	**-**	**-**	**-**	**-**	**145,000**

	Total Project Costs			**800,000**	**3,679,000**	**5,388,000**	**1,335,000**	**2,355,000**	**6,722,000**	**5,643,000**	**1,809,000**	**1,125,000**	**1,000,000**	**23,482,000**
	Estimated Contribution From Development			**800,000**	**900,000**	**2,500,000**	**3,500,000**	**1,000,000**	**1,000,000**	**1,000,000**	**1,000,000**	**1,000,000**	**1,000,000**	**13,700,000**

Note 1: Results of study in Project SU-2 will determine need for projects SU-3, T/D-2 and ST-1
Construction of Project ST-2 may eliminate need for projects SU-3 and T/D-2

CITY OF BLAINE
COMPREHENSIVE WATER SYSTEM PLAN
CAPITAL IMPROVEMENT PROJECT DESCRIPTION

PROJECT SUMMARY

MAP NO.	PROJECT NAME: NEW SOURCE
SU-3	**DESCRIPTION:** Connection of Well #9 to 440 pressure zone. Includes review of well condition/performance. Add 440 to 171–zone connection in Lincoln Park, with PRV.

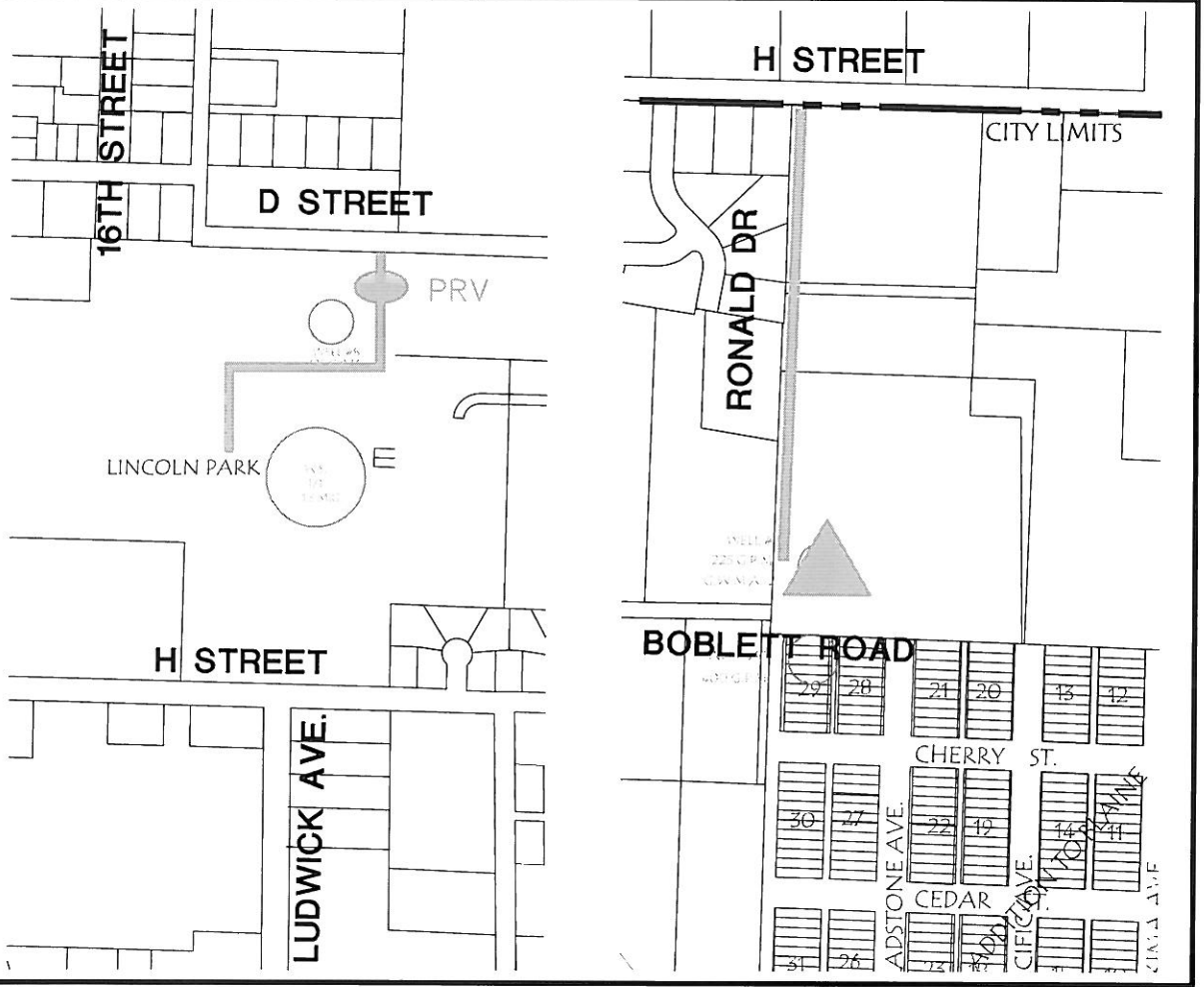

ESTIMATED PROJECT DATE: 2010

ESTIMATED PROJECT COSTS

PROJECT COST:

Construction	$	241,000
Engineering, Administration & Sales Tax	$	65,000
TOTAL	$	306,000

CITY OF BLAINE
COMPREHENSIVE WATER SYSTEM PLAN
CAPITAL IMPROVEMENT PROJECT DESCRIPTION

PROJECT SUMMARY

MAP NO.	PROJECT NAME: BOOSTER STATION WITH BACK-UP POWER
SU-5	**DESCRIPTION:** Booster Station to serve high point along Haynie Road close to Valley View Road.

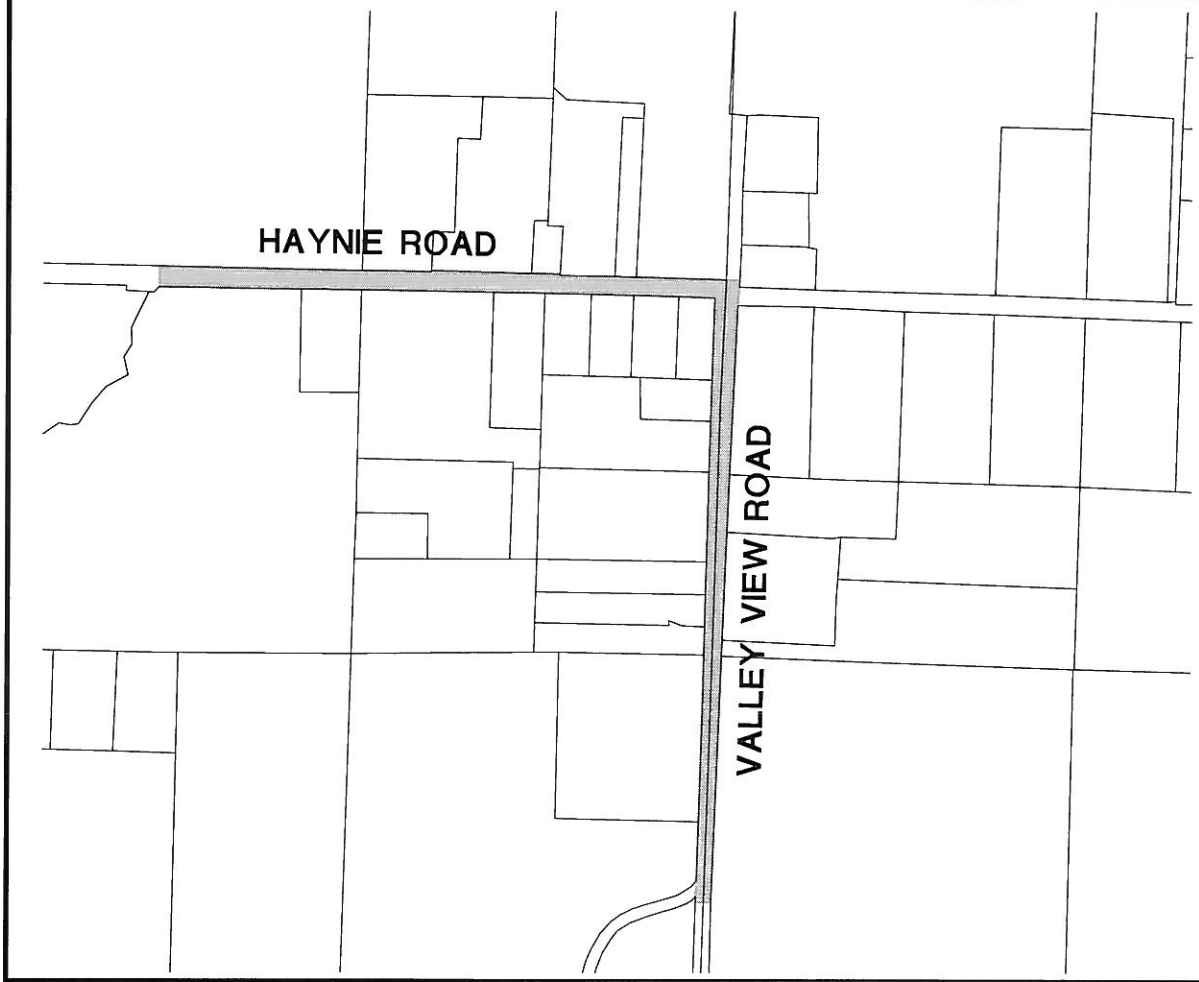

ESTIMATED PROJECT DATE: 2011

ESTIMATED PROJECT COSTS

PROJECT COST:

Construction	$ 246,000
Engineering, Administration & Sales Tax	$ 125,000
TOTAL	$ 371,000

CITY OF BLAINE
COMPREHENSIVE WATER SYSTEM PLAN
CAPITAL IMPROVEMENT PROJECT DESCRIPTION

PROJECT SUMMARY

MAP NO.	PROJECT NAME: NEW SOURCE
SU-6	DESCRIPTION: Upgrade of Well #5.1 including capacity increase, VFD power and telemetry.

ESTIMATED PROJECT DATE: 2011

ESTIMATED PROJECT COSTS

PROJECT COST:	
Construction	$ 100,000
Engineering, Administration & Sales Tax	$ 25,000
TOTAL	$ 125,000

CITY OF BLAINE
COMPREHENSIVE WATER SYSTEM PLAN
CAPITAL IMPROVEMENT PROJECT DESCRIPTION

PROJECT SUMMARY

MAP NO.	PROJECT NAME: NEW SOURCE
SU-7	**DESCRIPTION:** Completion of Well #8.1 including pump selection and connection to system.

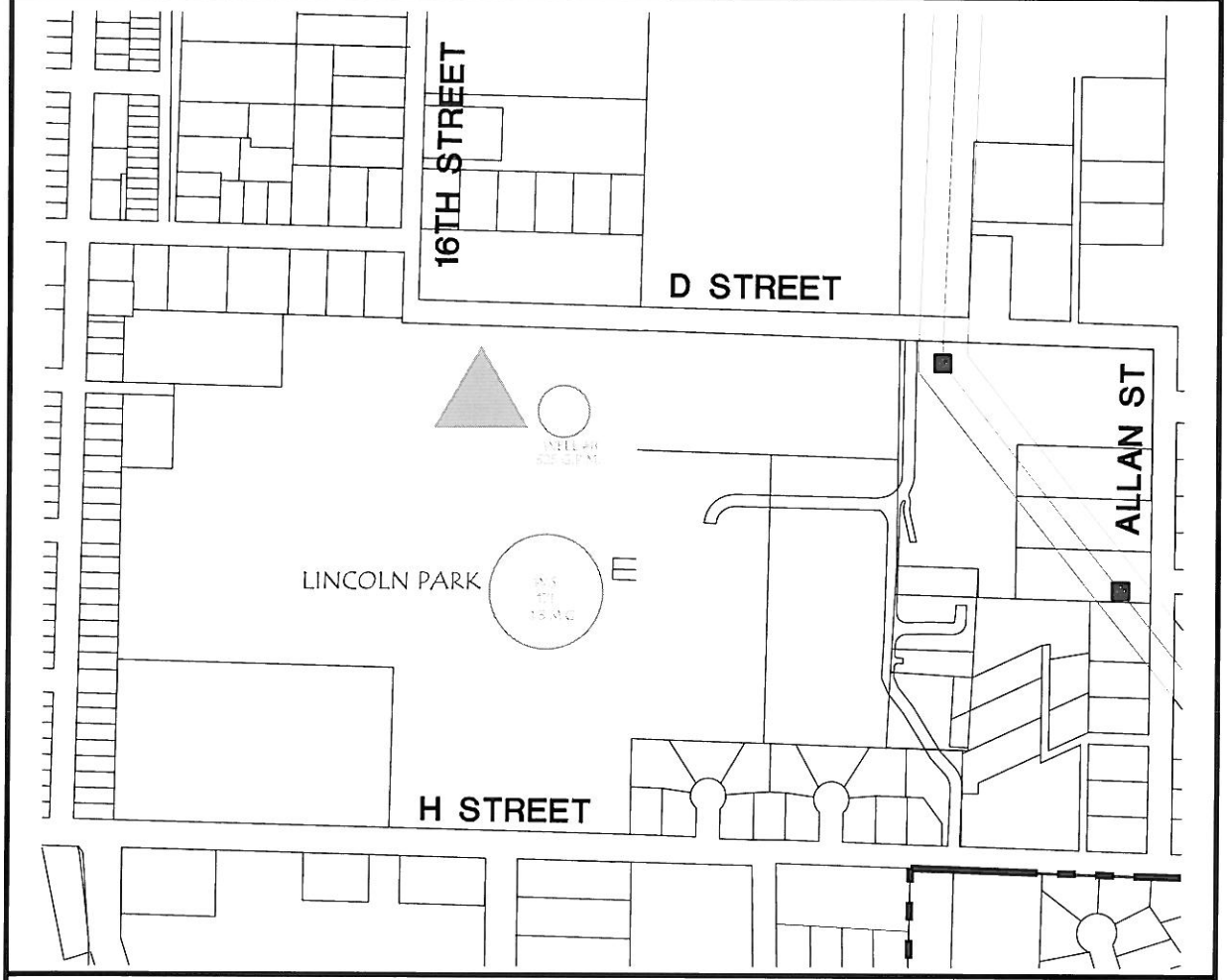

ESTIMATED PROJECT DATE: 2011

ESTIMATED PROJECT COSTS

PROJECT COST:	
Construction	$ 211,000
Engineering, Administration & Sales Tax	$ 50,000
TOTAL	$ 261,000

CITY OF BLAINE
COMPREHENSIVE WATER SYSTEM PLAN
CAPITAL IMPROVEMENT PROJECT DESCRIPTION

PROJECT SUMMARY

MAP NO.	PROJECT NAME: RESERVOIR #5 CIRCULATION IMPROVEMENTS
ST-1	**DESCRIPTION:** Modify inlet/outlet piping or add tank mixer for water circulation improvements.

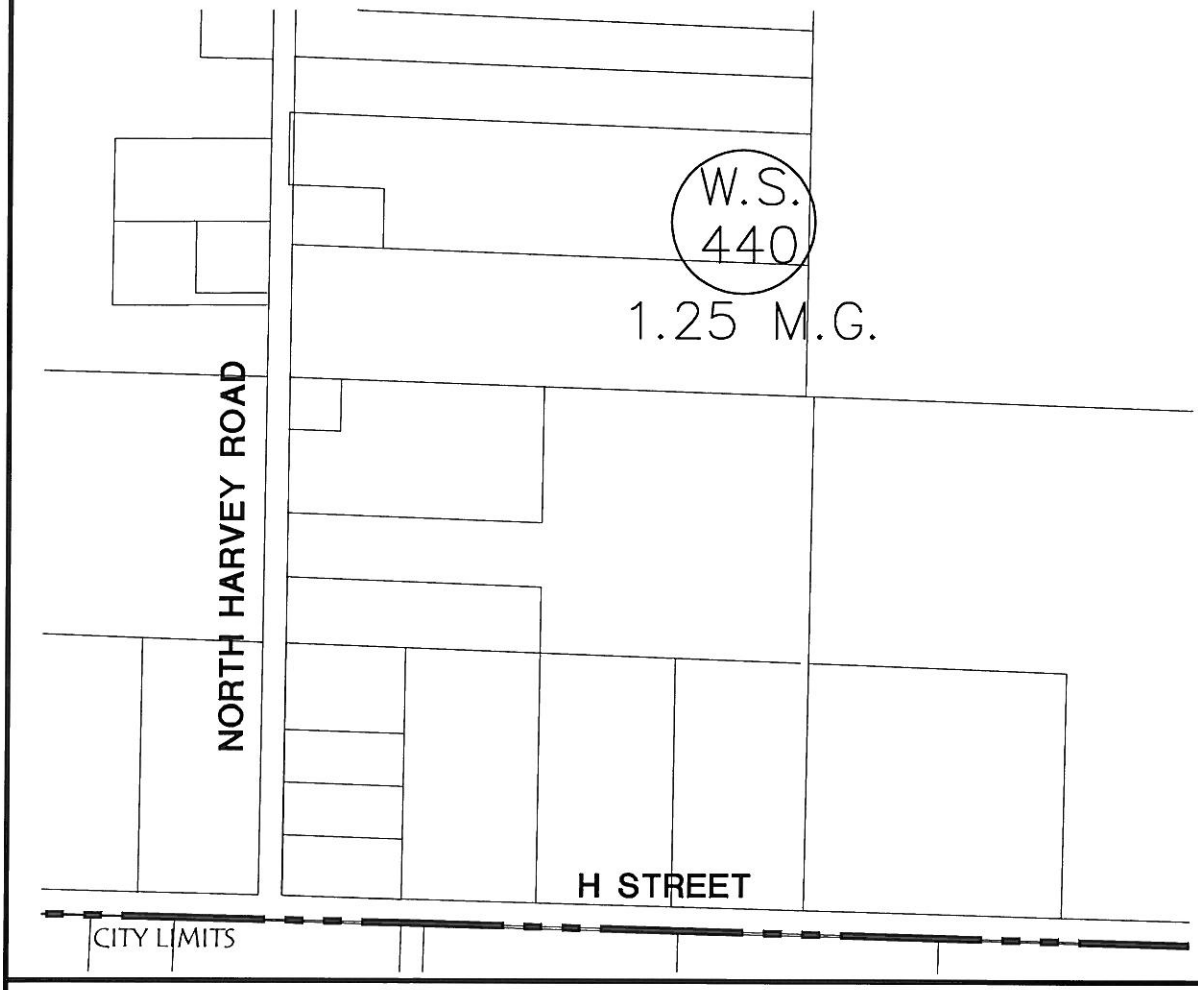

ESTIMATED PROJECT DATE: 2010

ESTIMATED PROJECT COSTS

PROJECT COST:

Construction	$	30,000
Engineering, Administration & Sales Tax	$	5,000
TOTAL	$	35,000

CITY OF BLAINE
COMPREHENSIVE WATER SYSTEM PLAN
CAPITAL IMPROVEMENT PROJECT DESCRIPTION

PROJECT SUMMARY

MAP NO.	PROJECT NAME: RESERVOIR
ST-2	**DESCRIPTION:** Construction of East Blaine (630–zone) storage reservoir. Completion in conjunction with/or after completion of 630–zone BPS (BPS–2) Project driven by development of East Blaine.

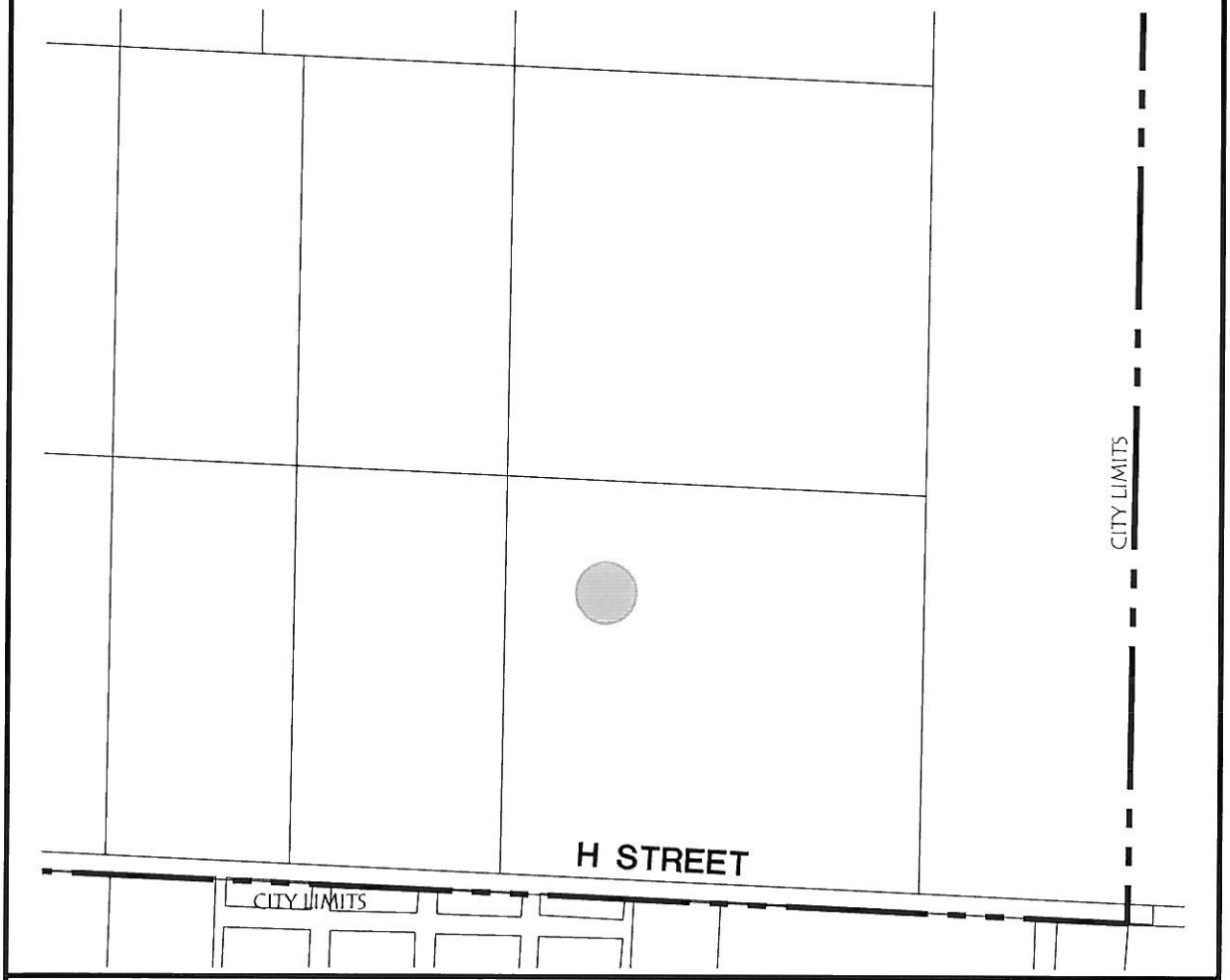

ESTIMATED PROJECT DATE: 2011*

ESTIMATED PROJECT COSTS

PROJECT COST:

Construction	$ 2,010,000
Engineering, Administration & Sales Tax	$ 500,000
TOTAL	$ 2,510,000

*Construction date contingent on private development schedule

CITY OF BLAINE
COMPREHENSIVE WATER SYSTEM PLAN
CAPITAL IMPROVEMENT PROJECT DESCRIPTION

PROJECT SUMMARY

MAP NO.	PROJECT NAME: RESERVOIR #4 CIRCULATION IMPROVEMENTS
ST-3	DESCRIPTION: Modify inlet/outlet piping or add tank mixer for water circulation improvements.

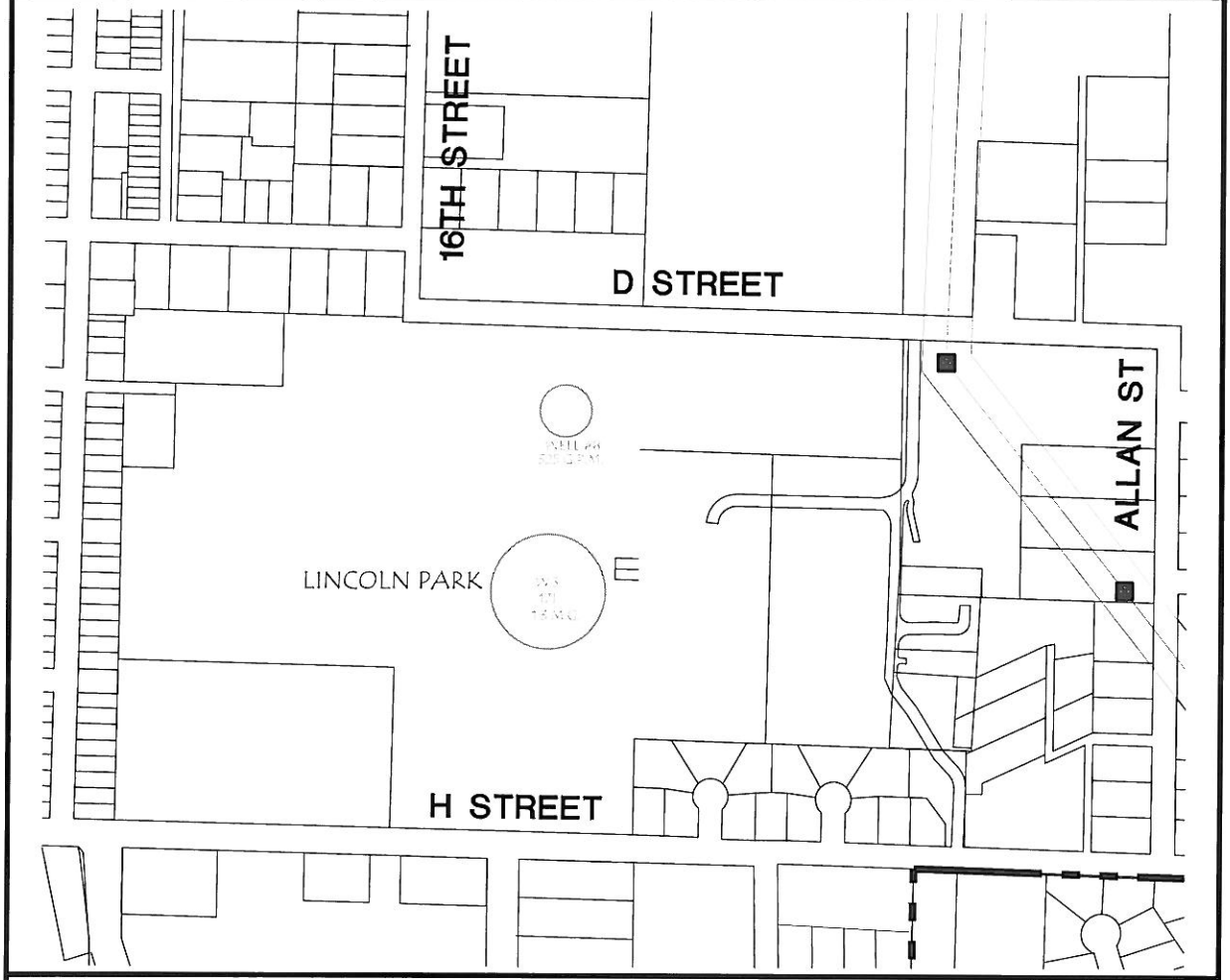

ESTIMATED PROJECT DATE: 2011

ESTIMATED PROJECT COSTS

PROJECT COST:	
Construction	$ 30,000
Engineering, Administration & Sales Tax	$ 5,000
TOTAL	$ 35,000

CITY OF BLAINE
COMPREHENSIVE WATER SYSTEM PLAN
CAPITAL IMPROVEMENT PROJECT DESCRIPTION

PROJECT SUMMARY

MAP NO.	PROJECT NAME: RESERVOIR #3 CIRCULATION IMPROVEMENTS
ST-4	**DESCRIPTION:** Modify inlet/outlet piping or add tank mixer for water circulation improvements.

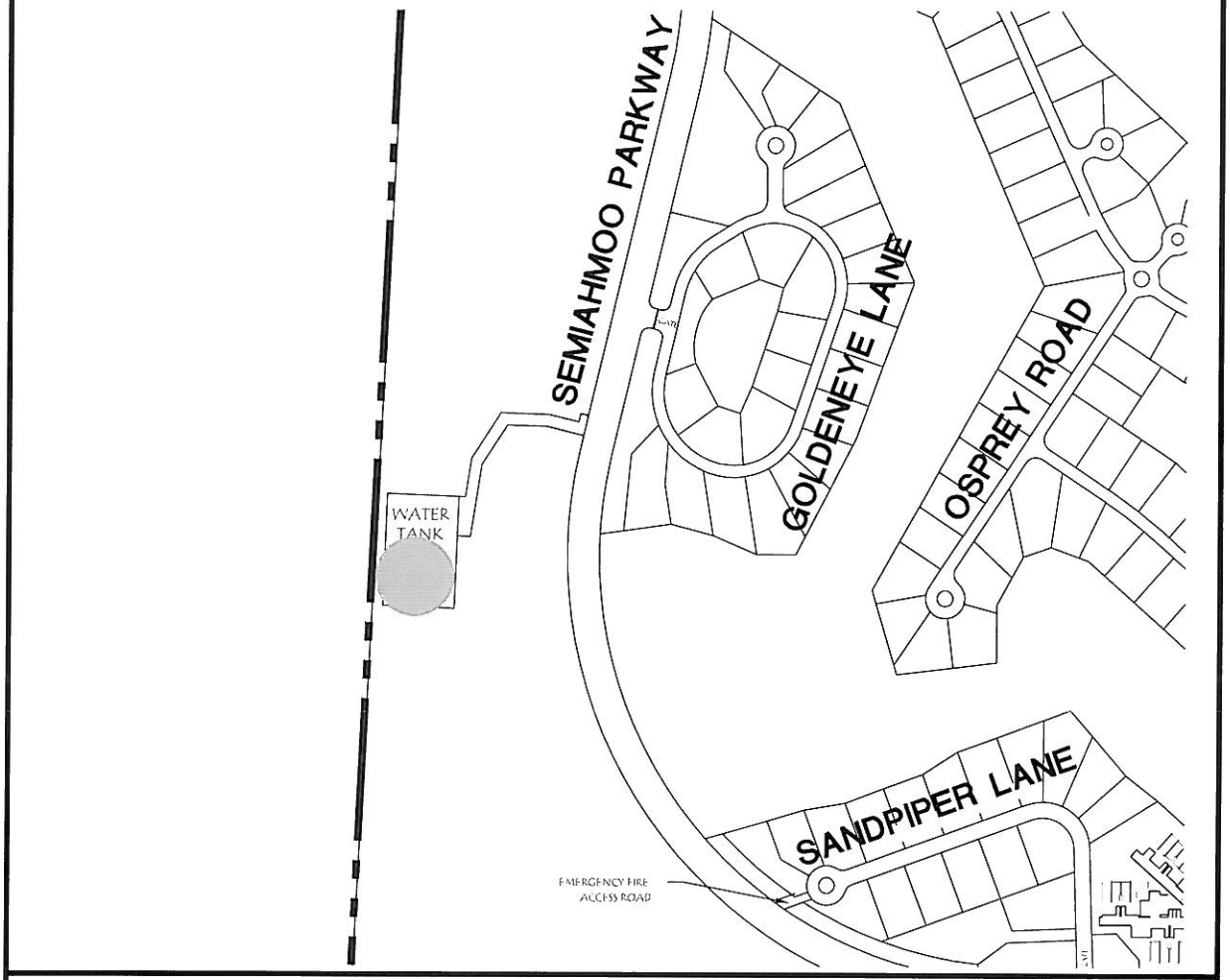

ESTIMATED PROJECT DATE: 2012

ESTIMATED PROJECT COSTS

PROJECT COST:	
Construction	$ 30,000
Engineering, Administration & Sales Tax	$ 5,000
TOTAL	$ 35,000

CITY OF BLAINE
COMPREHENSIVE WATER SYSTEM PLAN
CAPITAL IMPROVEMENT PROJECT DESCRIPTION

PROJECT SUMMARY

MAP NO.	PROJECT NAME: RESERVOIR UPGRADE
ST-5	DESCRIPTION: Reservoir #2 drain line modification (with future road project).

ESTIMATED PROJECT DATE: 2013

ESTIMATED PROJECT COSTS

PROJECT COST:	
Construction	$ 42,000
Engineering, Administration & Sales Tax	$ 8,000
TOTAL	$ 50,000

CITY OF BLAINE
COMPREHENSIVE WATER SYSTEM PLAN
CAPITAL IMPROVEMENT PROJECT DESCRIPTION

PROJECT SUMMARY

MAP NO.	PROJECT NAME: RESERVOIR
ST-6	**DESCRIPTION:** Construction of additional 330–zone storage reservoir.

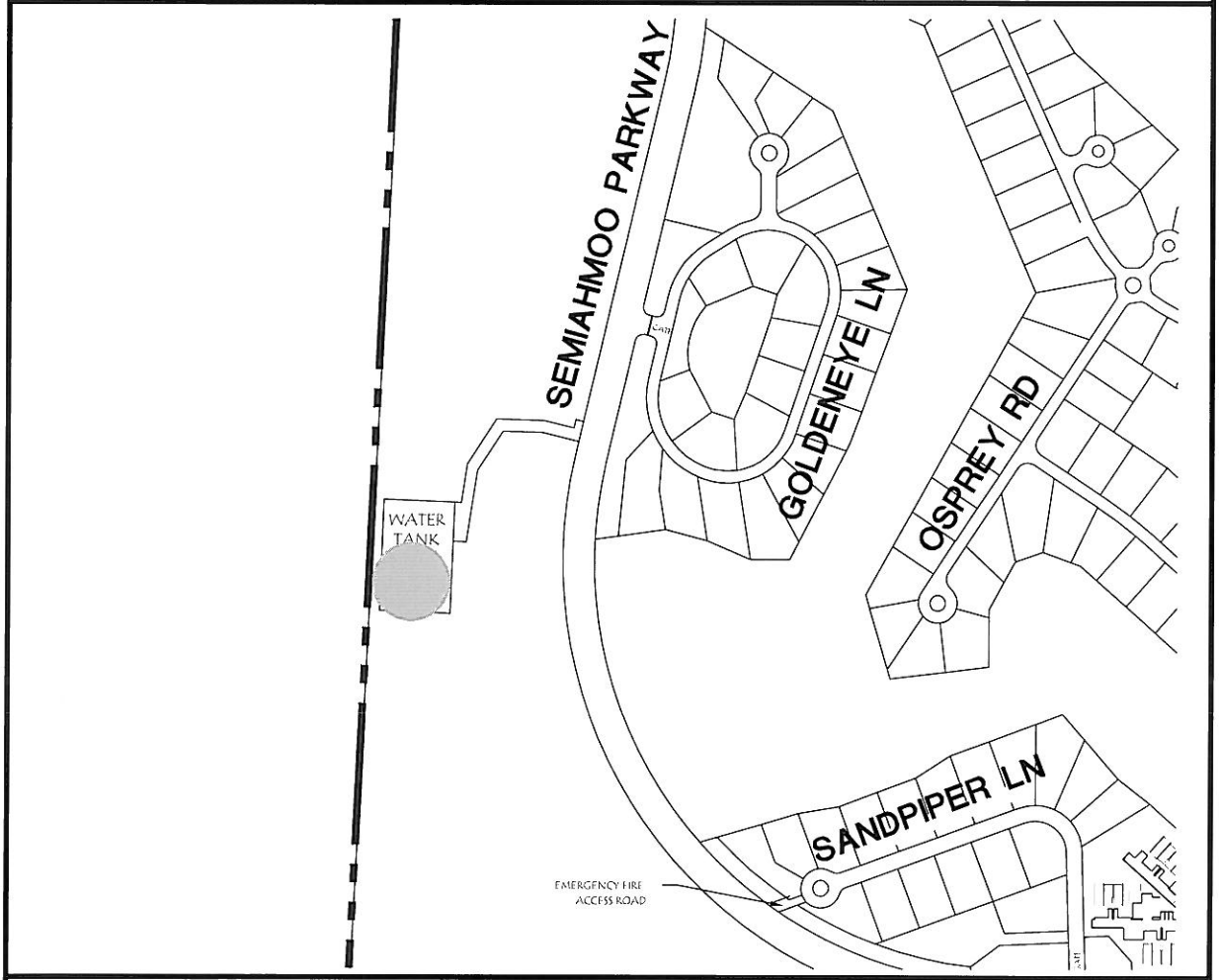

ESTIMATED PROJECT DATE: 2014

ESTIMATED PROJECT COSTS

PROJECT COST:	
Construction	$ 5,020,000
Engineering, Administration & Sales Tax	$ 602,000
TOTAL	$ 5,622,000

CITY OF BLAINE
COMPREHENSIVE WATER SYSTEM PLAN
CAPITAL IMPROVEMENT PROJECT DESCRIPTION

PROJECT SUMMARY

MAP NO.	PROJECT NAME: HARVEY ROAD TO PIPELINE ROAD MAIN EXTENSION
T/D-1	DESCRIPTION: Extension of existing 12" water line (approx. 1,400 ft.) along Harvey Rd. south of H St. to the intersection of Pipeline Rd.

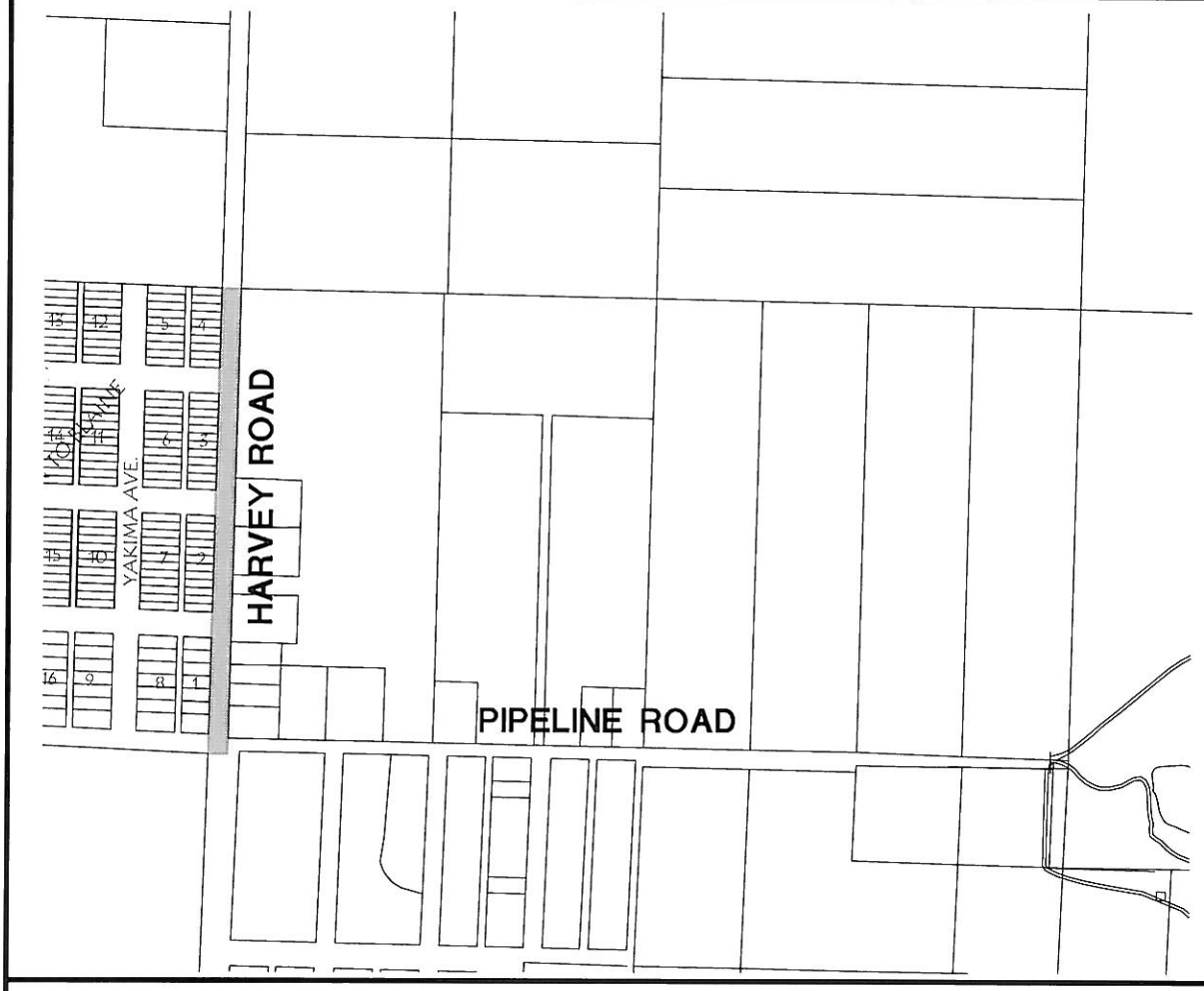

ESTIMATED PROJECT DATE: 2010

ESTIMATED PROJECT COSTS

PROJECT COST:	
Construction	$ 179,000
Engineering, Administration & Sales Tax	$ 72,000
TOTAL	$ 251,000

CITY OF BLAINE
COMPREHENSIVE WATER SYSTEM PLAN
CAPITAL IMPROVEMENT PROJECT DESCRIPTION

PROJECT SUMMARY

MAP NO.	PROJECT NAME: PIPELINE ROAD MAIN EXTENSION
T/D-3	DESCRIPTION: Extension of 8" main from intersection of Harvey Rd. and Pipeline Rd. continuing east along Pipeline Road to the entrance of the City's well field area.

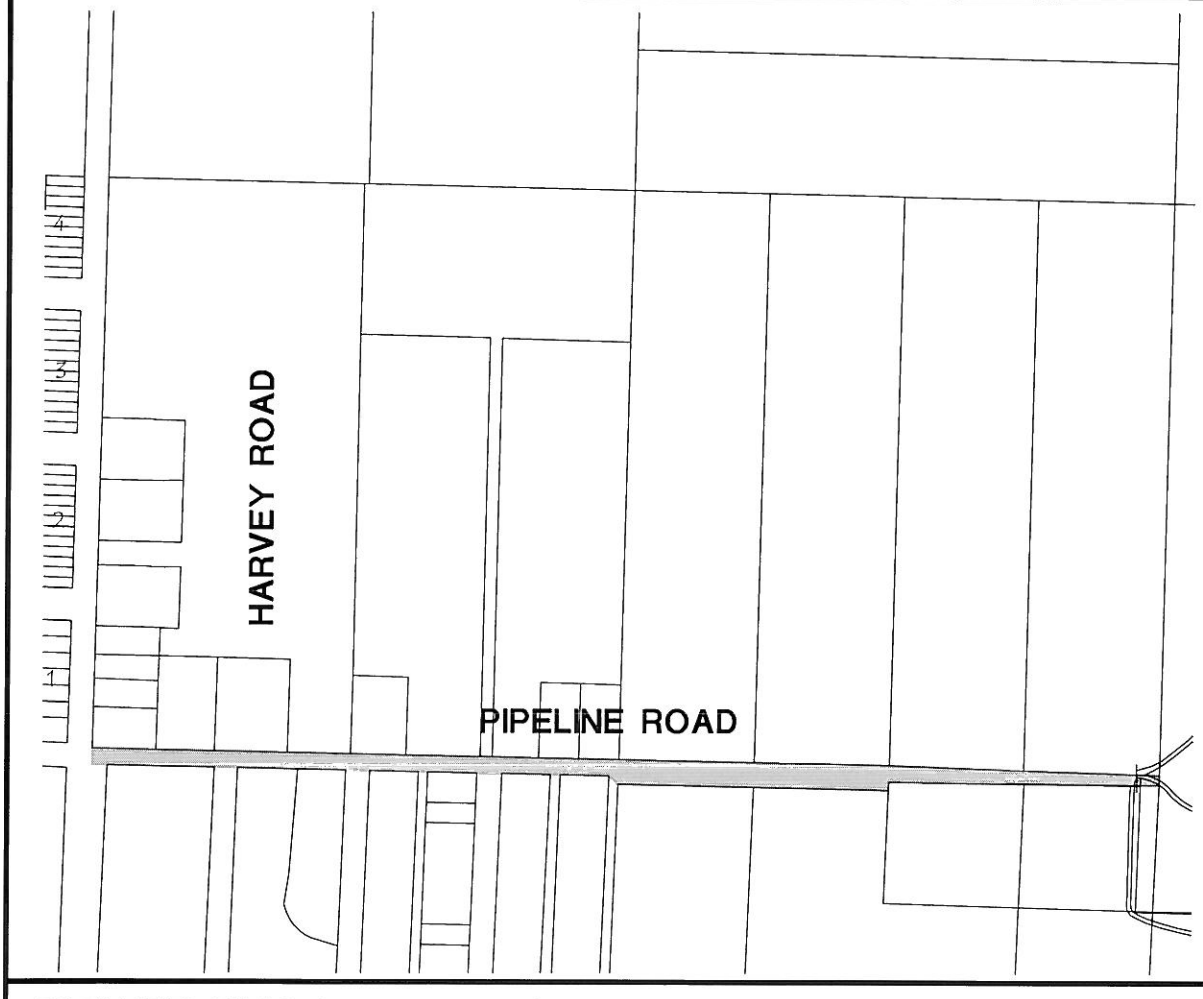

ESTIMATED PROJECT DATE: 2010

ESTIMATED PROJECT COSTS

PROJECT COST:

Construction	$	222,500
Engineering, Administration & Sales Tax	$	88,500
TOTAL	$	311,000

CITY OF BLAINE
COMPREHENSIVE WATER SYSTEM PLAN
CAPITAL IMPROVEMENT PROJECT DESCRIPTION

PROJECT SUMMARY

MAP NO.	PROJECT NAME: 9TH STREET REPLACEMENT
T/D-3	DESCRIPTION: Replacement of approx. 400 linear feet of exist. 6" main with 8" D.I. main, in conjunction with City's pavement replacement plan. Pipe replacement would extend from H Street to G Street.

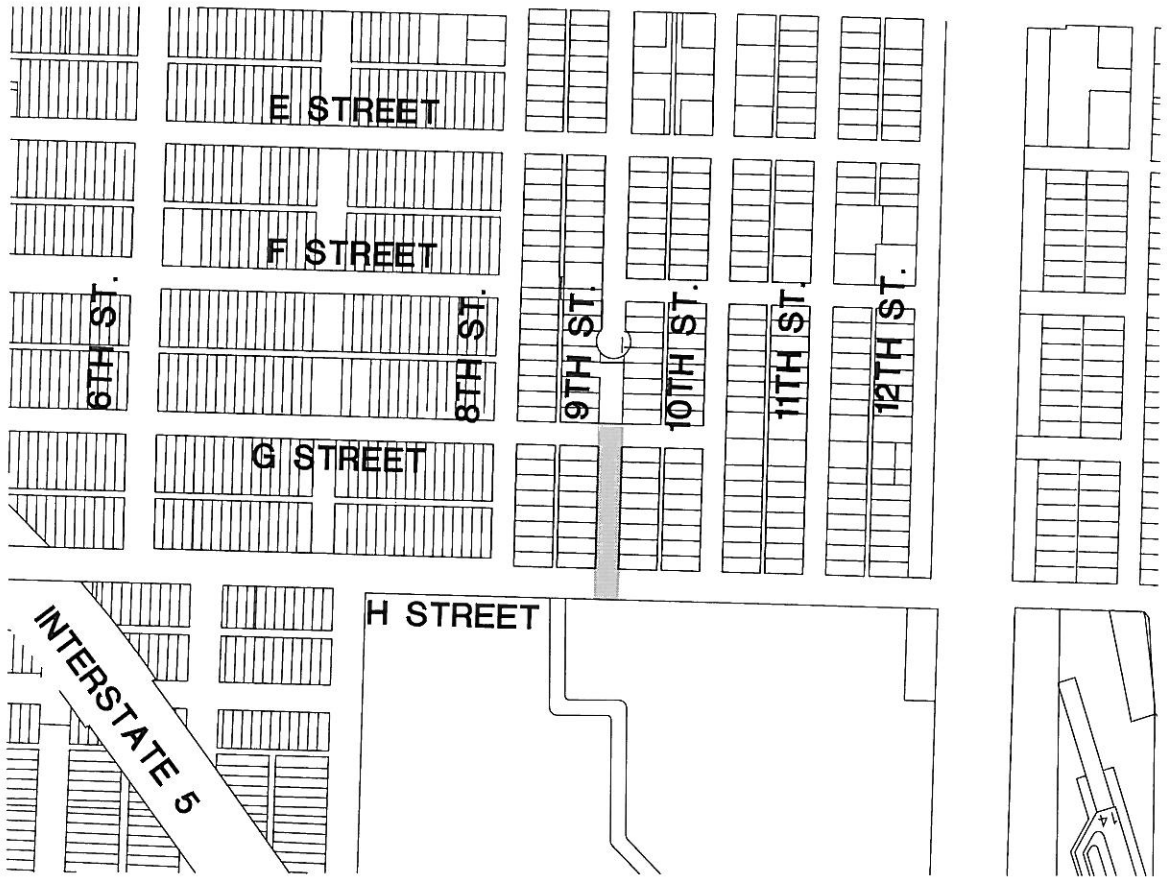

ESTIMATED PROJECT DATE: 2010

ESTIMATED PROJECT COSTS

PROJECT COST:	
Construction	$ 35,700
Engineering, Administration & Sales Tax	$ 14,300
TOTAL	$ 50,000

CITY OF BLAINE
COMPREHENSIVE WATER SYSTEM PLAN
CAPITAL IMPROVEMENT PROJECT DESCRIPTION

PROJECT SUMMARY

MAP NO.	PROJECT NAME: B STREET REPLACEMENT
T/D-4	DESCRIPTION: Replacement of approx. 900 linear feet of exist. 6" main with 8" D.I. main, in conjunction with City's pavement replacement plan. Pipe replacement would extend from 2nd Street to 5th Street.

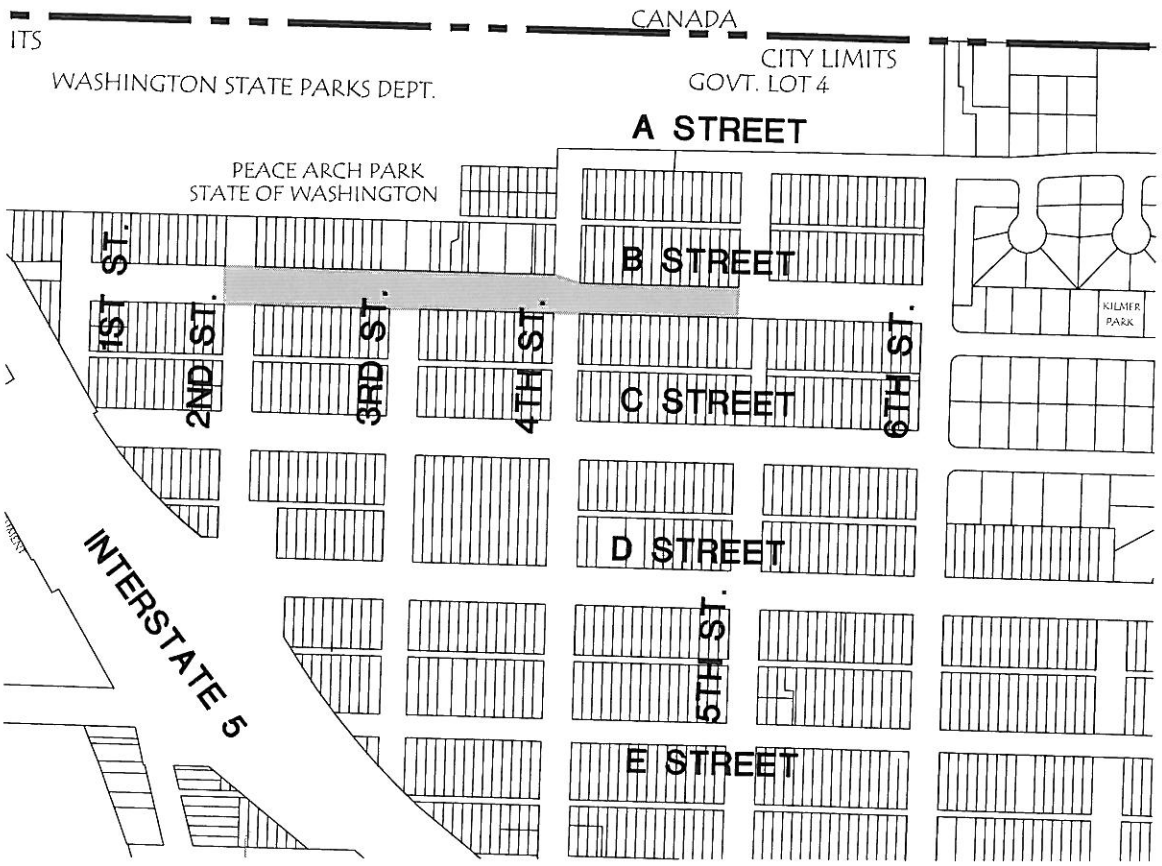

ESTIMATED PROJECT DATE: 2010

ESTIMATED PROJECT COSTS

PROJECT COST:

Construction	$ 78,600
Engineering, Administration & Sales Tax	$ 31,400
TOTAL	$ 110,000

CITY OF BLAINE
COMPREHENSIVE WATER SYSTEM PLAN
CAPITAL IMPROVEMENT PROJECT DESCRIPTION

PROJECT SUMMARY

MAP NO.	PROJECT NAME: 4TH STREET REPLACEMENT
T/D-5	DESCRIPTION: Replacement of approx. 800 linear feet of exist. 6" main with 8" D.I. main. Replacement of approx. 100 linear feet of exist. 8" main, all in conjunction with City's pavement replacement plan. Pipe replacement would extend from D Street to A Street. Add PRV at end of A Street.

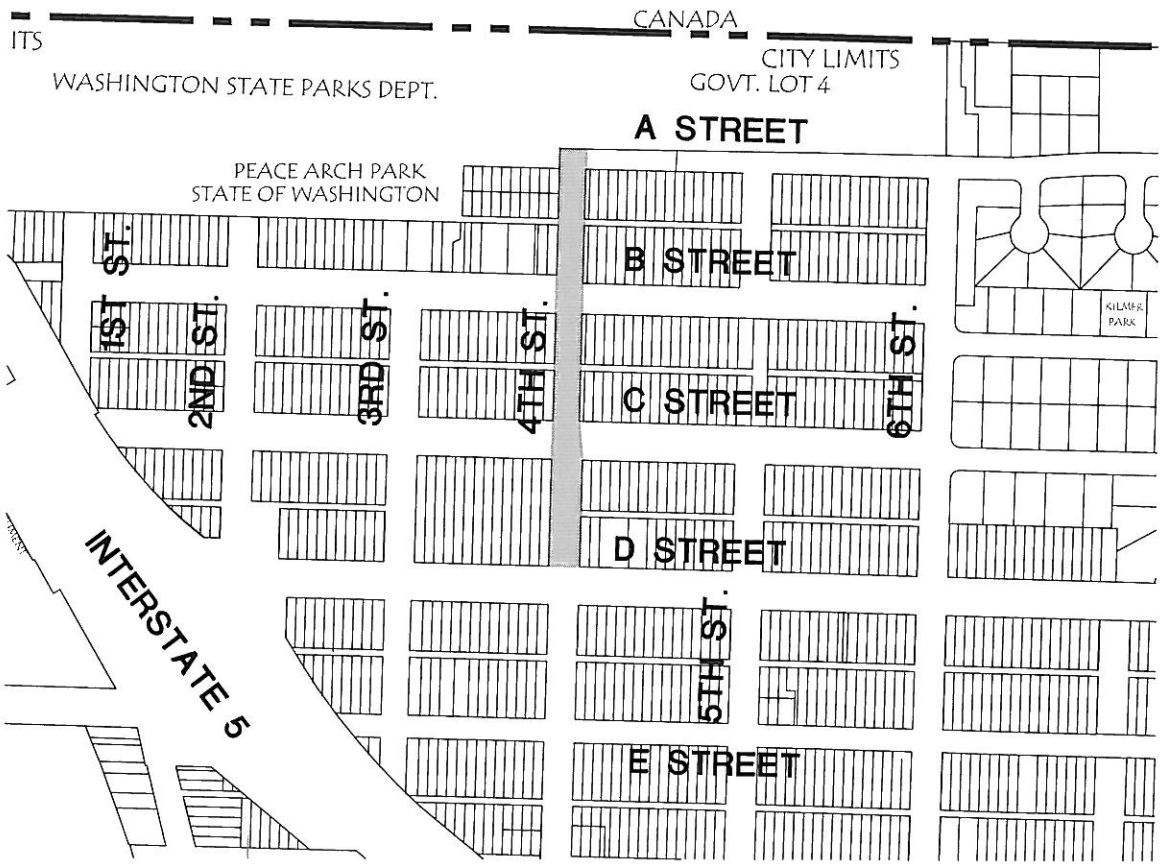

ESTIMATED PROJECT DATE: 2010

ESTIMATED PROJECT COSTS

PROJECT COST:	
Construction	$ 82,100
Engineering, Administration & Sales Tax	$ 32,900
TOTAL	$ 115,000

CITY OF BLAINE
COMPREHENSIVE WATER SYSTEM PLAN
CAPITAL IMPROVEMENT PROJECT DESCRIPTION

PROJECT SUMMARY

MAP NO.	PROJECT NAME: CATHODIC PROTECTION
T/D-6	DESCRIPTION: Cathodic protection for harbor crossing.

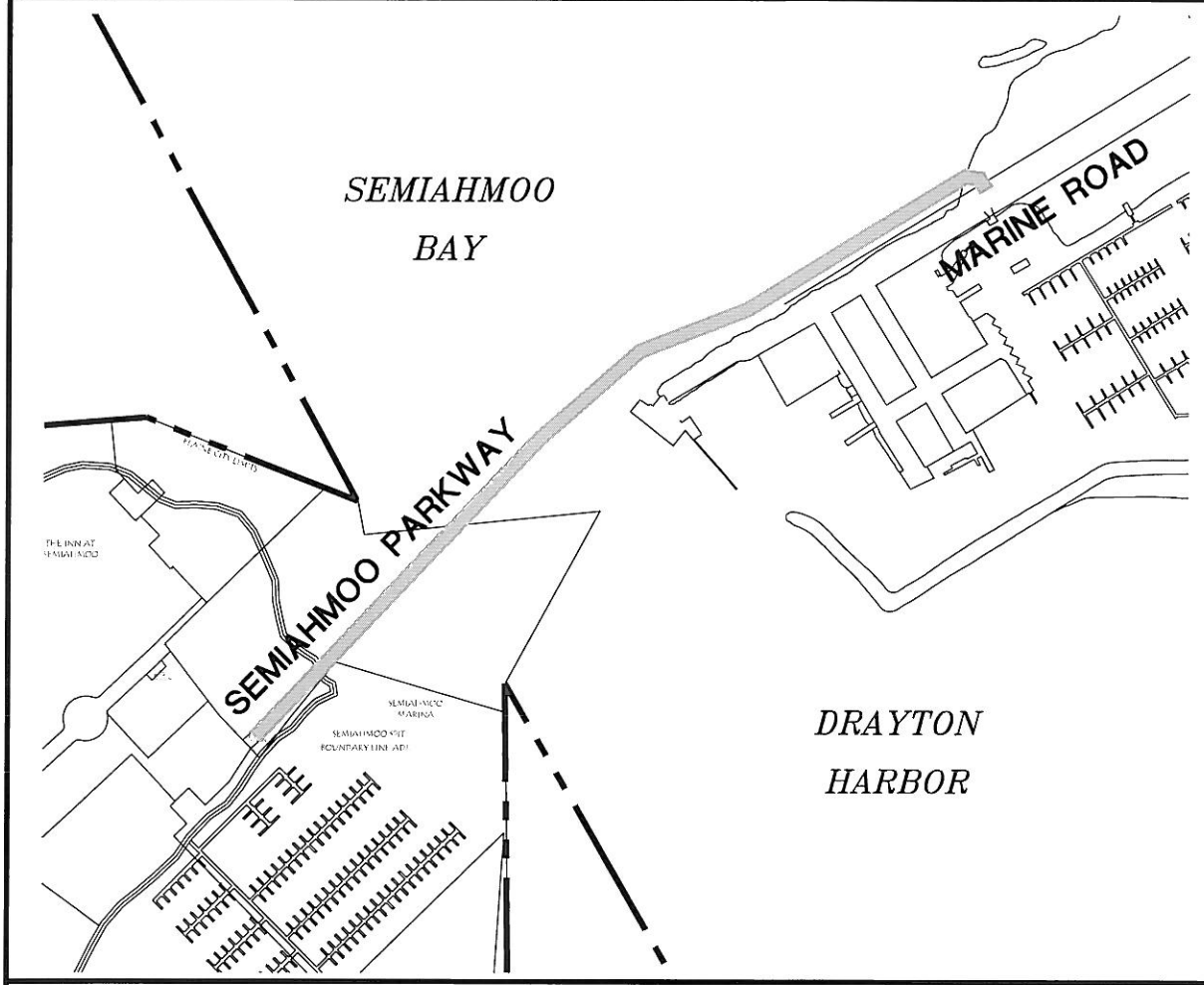

ESTIMATED PROJECT DATE: 2011

ESTIMATED PROJECT COSTS

PROJECT COST:

Construction	$	45,000
Engineering, Administration & Sales Tax	$	5,000
TOTAL	$	50,000

CITY OF BLAINE
COMPREHENSIVE WATER SYSTEM PLAN
CAPITAL IMPROVEMENT PROJECT DESCRIPTION

PROJECT SUMMARY

MAP NO.	PROJECT NAME: BELL ROAD/HUGHES AVENUE MAIN REPLACEMENT
T/D-7	DESCRIPTION: Construction of 24" transmission main from Portal Way connection north to Hughes Ave., then east to the east side of Interstate 5.

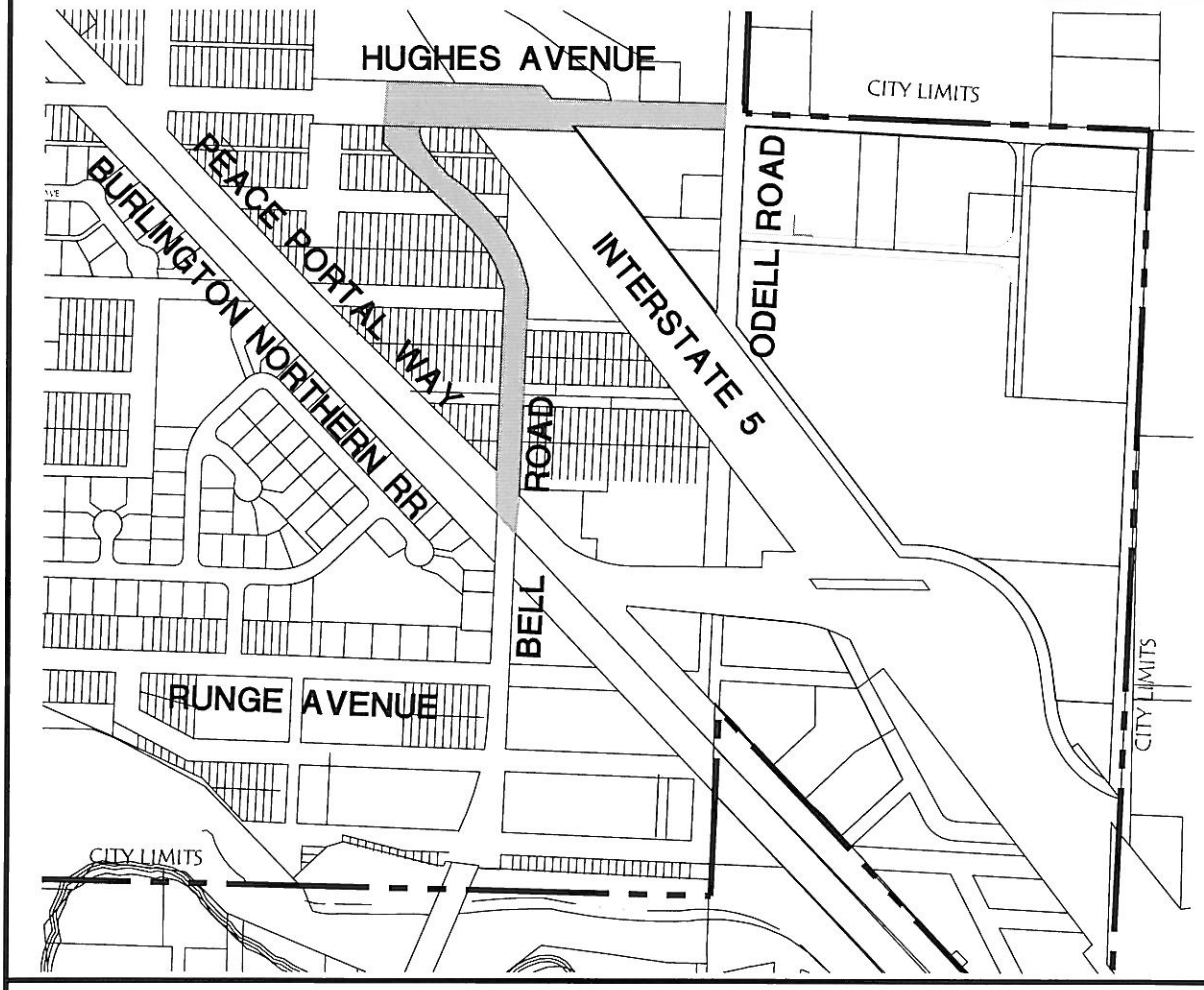

ESTIMATED PROJECT DATE: 2011

ESTIMATED PROJECT COSTS

PROJECT COST:	
Construction	$ 599,000
Engineering, Administration & Sales Tax	$ 242,000
TOTAL	$ 841,000

CITY OF BLAINE
COMPREHENSIVE WATER SYSTEM PLAN
CAPITAL IMPROVEMENT PROJECT DESCRIPTION

PROJECT SUMMARY

MAP NO.	PROJECT NAME: SWEET ROAD TRANSMISSION MAIN UPSIZING – PHASE 1
T/D-8	DESCRIPTION: Construction of 24" transmission main along Sweet Rd. from termination of Project T/D–7 east (approx. 3,800 ft.) toward well field.

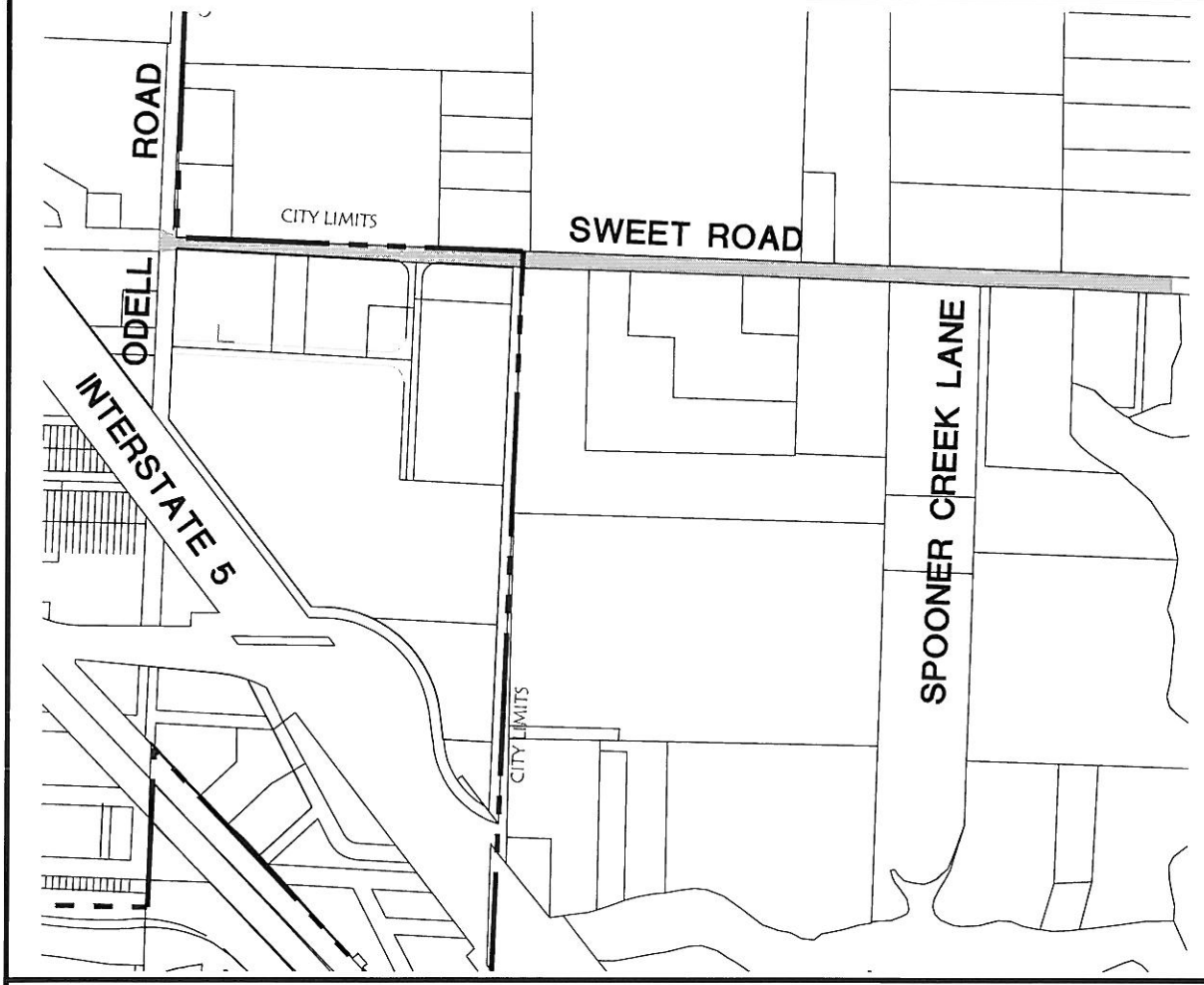

ESTIMATED PROJECT DATE: 2013

ESTIMATED PROJECT COSTS

PROJECT COST:

Construction	$ 896,000
Engineering, Administration & Sales Tax	$ 359,000
TOTAL	$ 1,255,000

CITY OF BLAINE
COMPREHENSIVE WATER SYSTEM PLAN
CAPITAL IMPROVEMENT PROJECT DESCRIPTION

PROJECT SUMMARY

MAP NO.	PROJECT NAME: SWEET ROAD TRANSMISSION MAIN UPSIZING – PHASE 2
T/D-9	DESCRIPTION: Construction of 24" transmission main along Sweet Rd. from termination of Project T/D–8 east (approx. 3,800 ft.) toward well field.

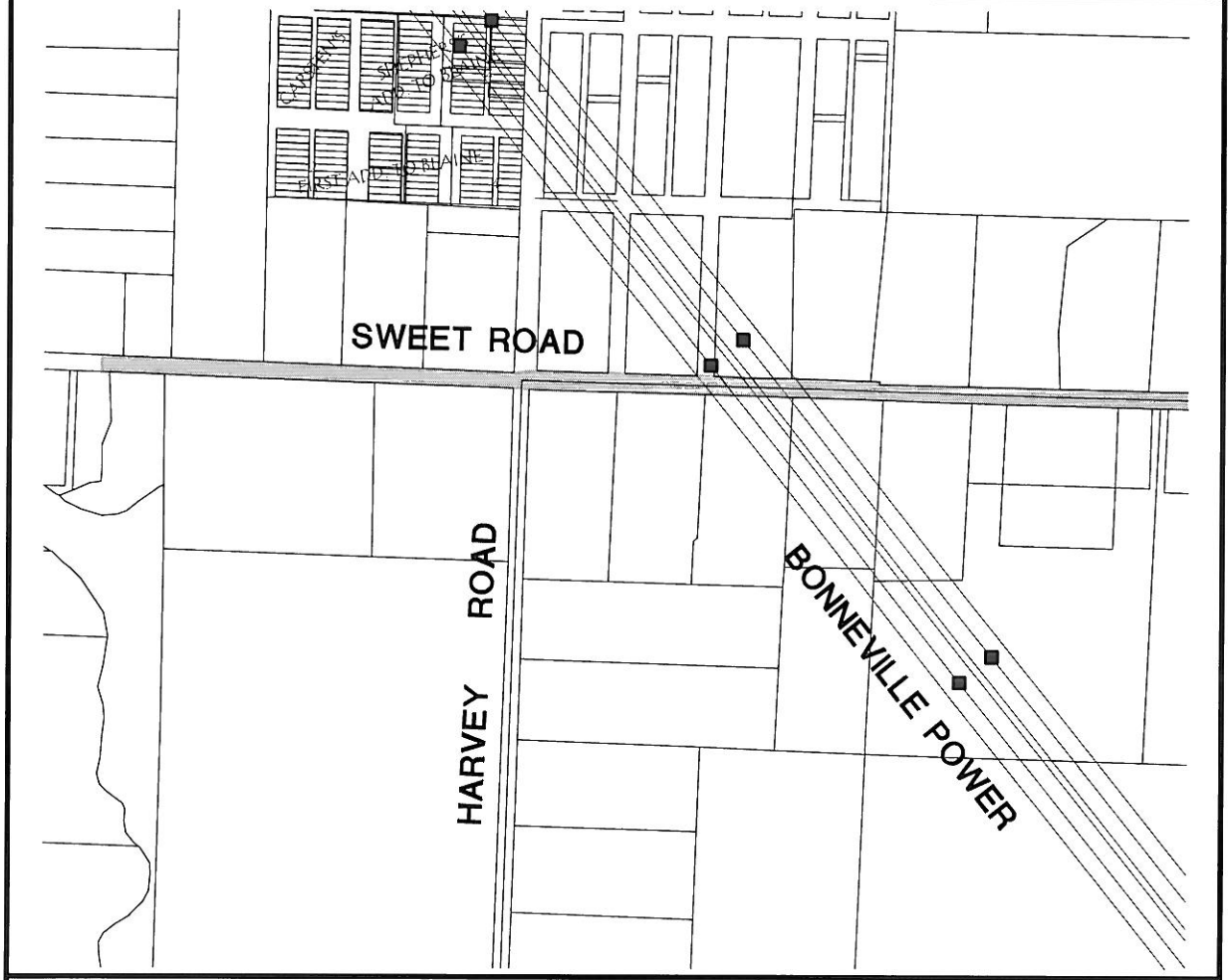

ESTIMATED PROJECT DATE: 2015

ESTIMATED PROJECT COSTS

PROJECT COST:	
Construction	$ 896,000
Engineering, Administration & Sales Tax	$ 359,000
TOTAL	$ 1,255,000

CITY OF BLAINE
COMPREHENSIVE WATER SYSTEM PLAN
CAPITAL IMPROVEMENT PROJECT DESCRIPTION

PROJECT SUMMARY

MAP NO.	PROJECT NAME: SWEET ROAD TRANSMISSION MAIN UPSIZING – PHASE 3
T/D-10	DESCRIPTION: Construction of 24" transmission main along Sweet Rd. from termination of Project T/D–9 east and north (approx. 3,800 ft.) to the well field.

ESTIMATED PROJECT DATE: 2017

ESTIMATED PROJECT COSTS

PROJECT COST:

Construction	$ 896,000
Engineering, Administration & Sales Tax	$ 359,000
TOTAL	$ 1,255,000

CITY OF BLAINE
COMPREHENSIVE WATER SYSTEM PLAN
CAPITAL IMPROVEMENT PROJECT DESCRIPTION

PROJECT SUMMARY

MAP NO.	PROJECT NAME: E STREET REPLACEMENT
T/D-11	DESCRIPTION: Replacement of approx. 400 linear feet of exist. 6" main with 8" D.I. main. Replacement of approx. 800 linear feet of exist. 8" main, all in conjunction with City's pavement replacement plan. Pipe replacement would extend from 6th Street to 12th Street.

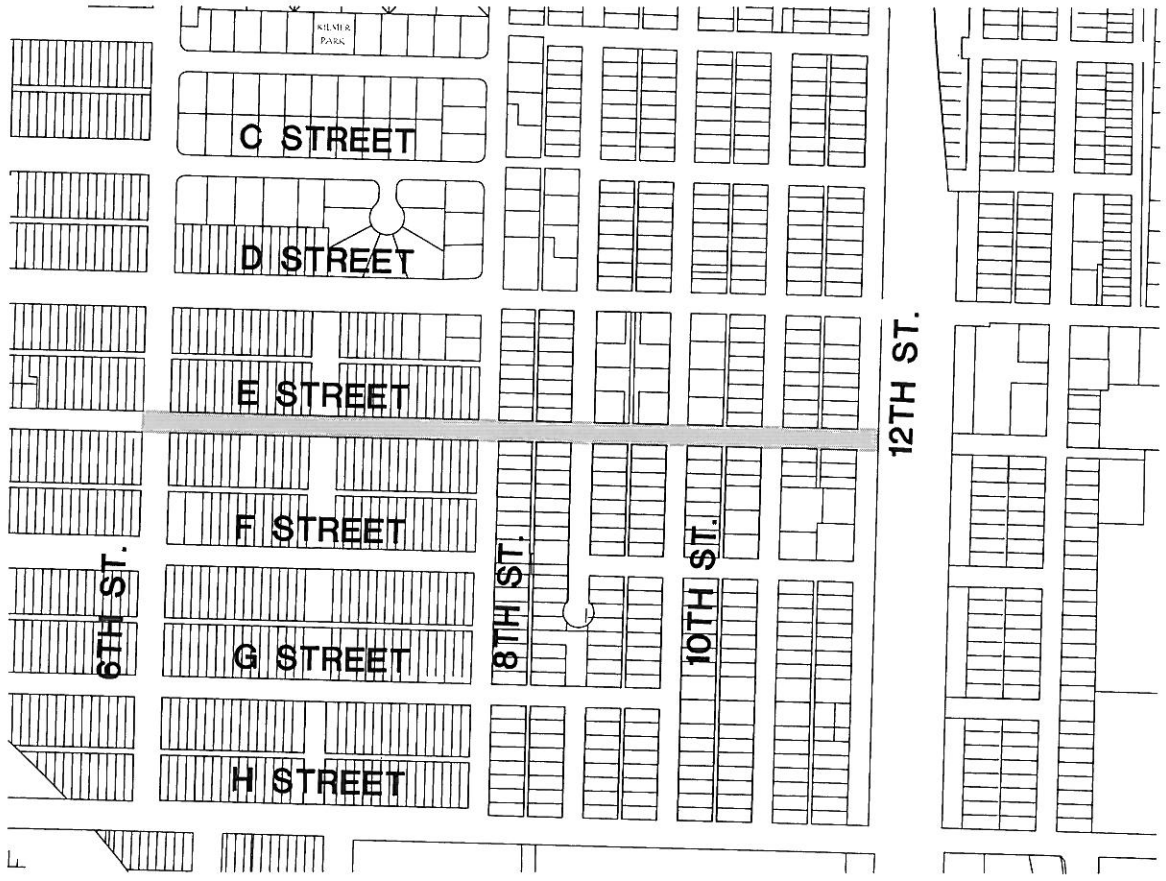

ESTIMATED PROJECT DATE: 2016–2030 (Concurrent with Road Replacement)

ESTIMATED PROJECT COSTS

PROJECT COST:		
Construction	$	104,600
Engineering, Administration & Sales Tax	$	41,400
TOTAL	$	146,000

CITY OF BLAINE
COMPREHENSIVE WATER SYSTEM PLAN
CAPITAL IMPROVEMENT PROJECT DESCRIPTION

PROJECT SUMMARY

MAP NO.	PROJECT NAME: CEDAR STREET REPLACEMENT
T/D-12	DESCRIPTION: Replacement of approx. 1,500 linear feet of exist. 4" main, 400 linear feet of exist. 6" main and 200 linear feet of exist. 1" main with 8" D.I., all in conjunction with City's pavement replacement plan. Pipe replacement would extend from Peace Portal Drive to Mitchell Ave.

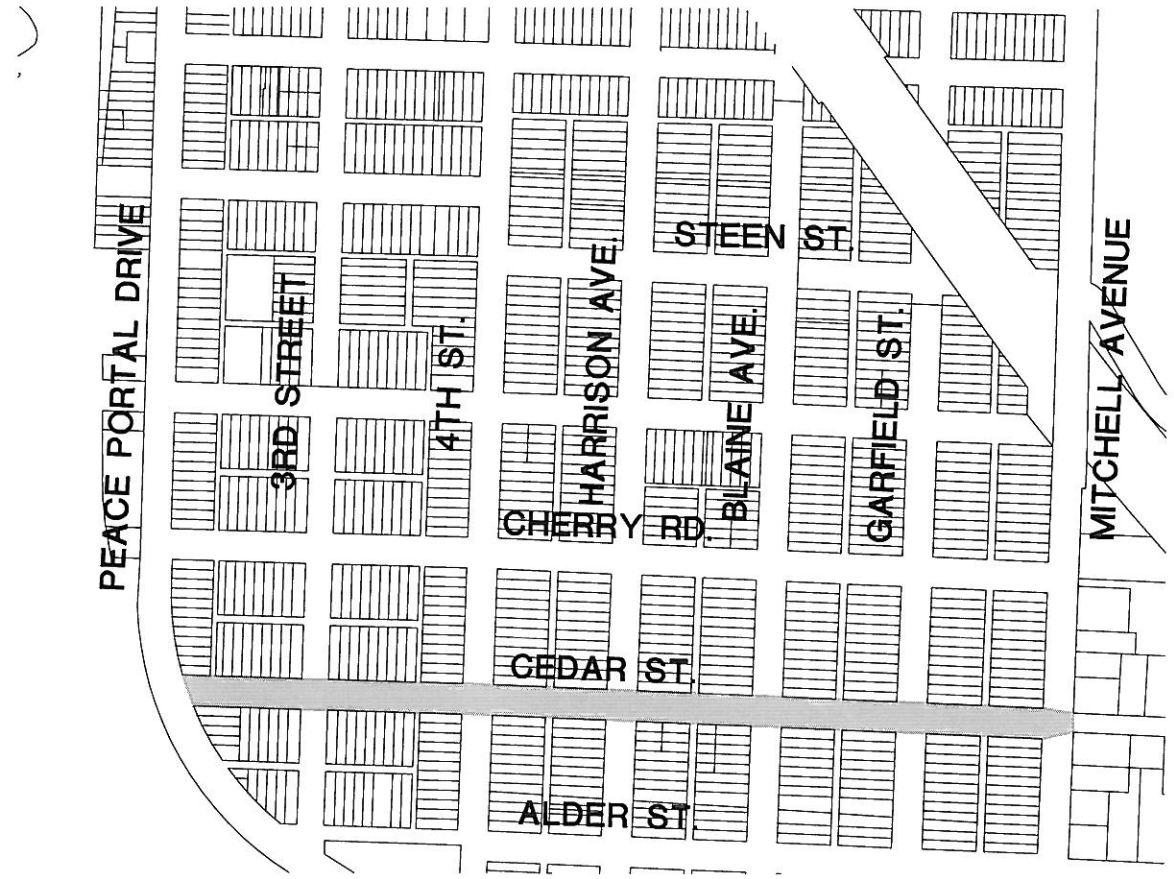

ESTIMATED PROJECT DATE: 2016–2030 (Concurrent with Road Replacement)

ESTIMATED PROJECT COSTS

PROJECT COST:

Construction	$	179,600
Engineering, Administration & Sales Tax	$	71,400
TOTAL	$	251,000

CITY OF BLAINE
COMPREHENSIVE WATER SYSTEM PLAN
CAPITAL IMPROVEMENT PROJECT DESCRIPTION

PROJECT SUMMARY

MAP NO.	PROJECT NAME: 11TH STREET REPLACEMENT
T/D-13	DESCRIPTION: Replacement of approx. 2,200 linear feet of exist. 6" main with 8" D.I. main. Replacement of approx. 300 linear feet of exist. 8" main. Replacement of approx. 800 linear feet of exist. 12" AC main with 12" D.I., all in conjunction with City's pavement replacement plan. Pipe replacement would extend from H Street to B Street.

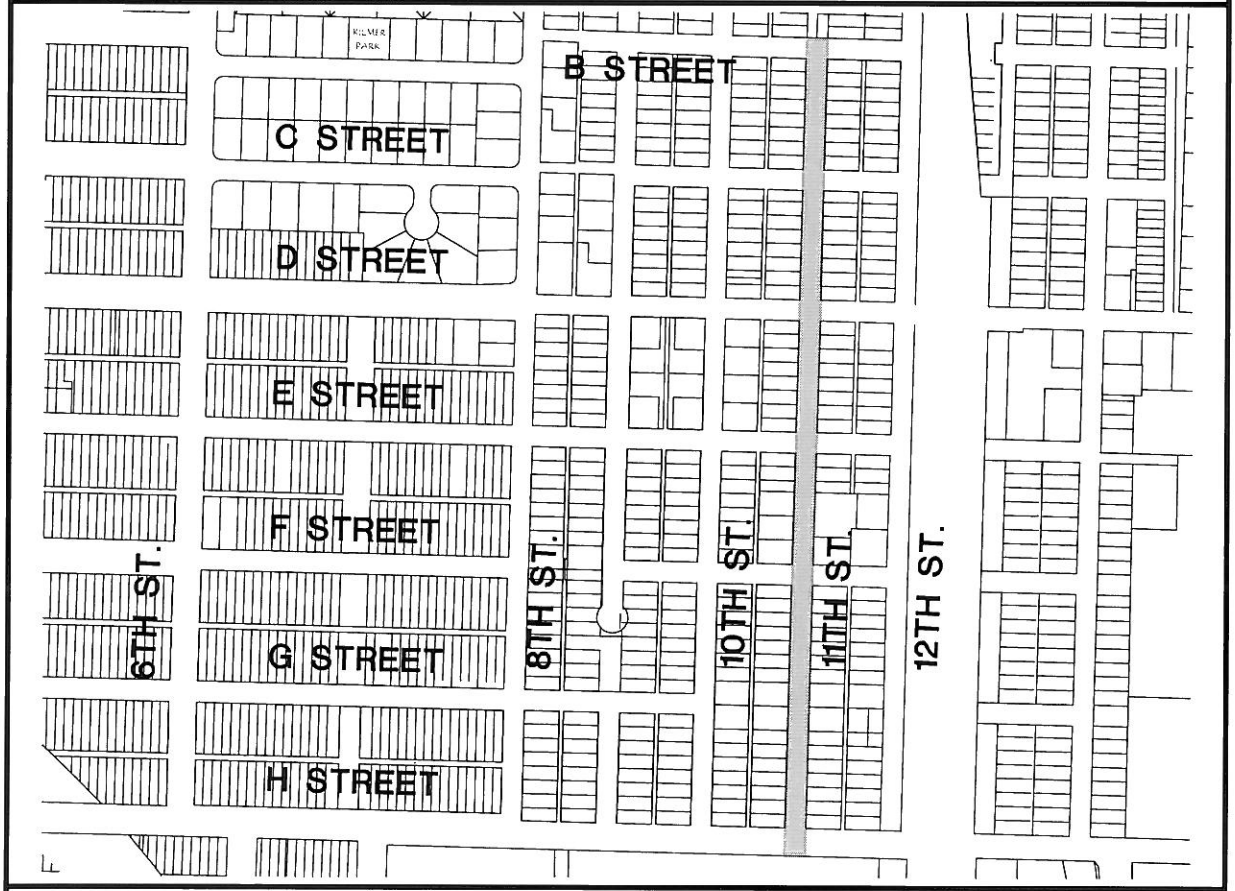

ESTIMATED PROJECT DATE: 2016–2030 (Concurrent with Road Replacement)

ESTIMATED PROJECT COSTS

PROJECT COST:	
Construction	$ 294,900
Engineering, Administration & Sales Tax	$ 118,000
TOTAL	$ 412,000

CITY OF BLAINE
COMPREHENSIVE WATER SYSTEM PLAN
CAPITAL IMPROVEMENT PROJECT DESCRIPTION

PROJECT SUMMARY

MAP NO.	PROJECT NAME: BOOSTER PUMP STATION
BPS-1	**DESCRIPTION:** Construction of 630–zone Booster Pump Station.

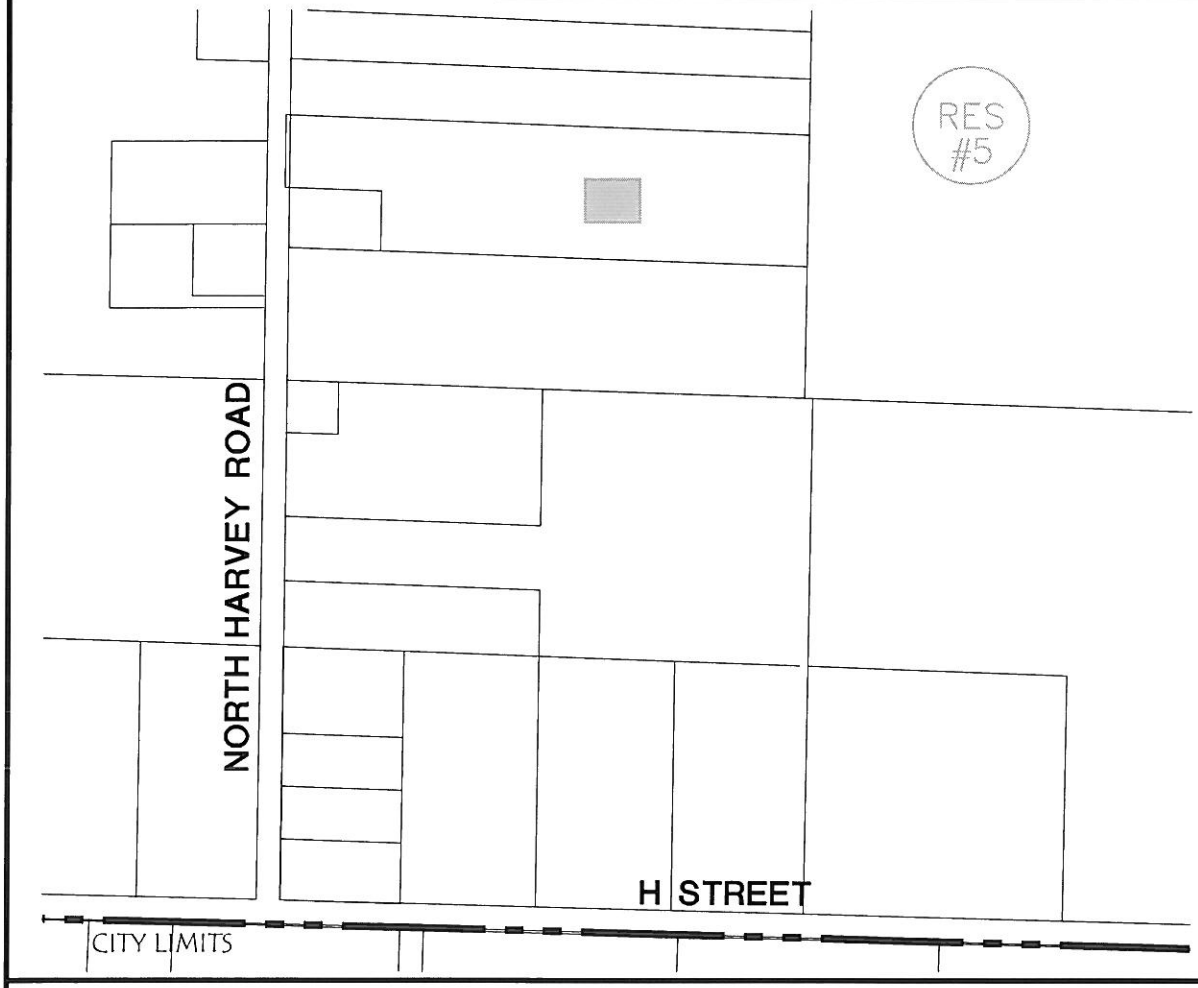

ESTIMATED PROJECT DATE: 2010

ESTIMATED PROJECT COSTS

PROJECT COST:

Construction	$ 880,000
Engineering, Administration & Sales Tax	$ 325,000
TOTAL	$ 1,205,000

* Construction Date contingent on private development schedule

CITY OF BLAINE
COMPREHENSIVE WATER SYSTEM PLAN
CAPITAL IMPROVEMENT PROJECT DESCRIPTION

PROJECT SUMMARY

MAP NO.	PROJECT NAME: BOOSTER STATION UPGRADE
BPS-2	**DESCRIPTION:** Addition of stand–by power generator at Lincoln Park for Booster Pump Stations #2 and #5. (Concurrent with SU–7)

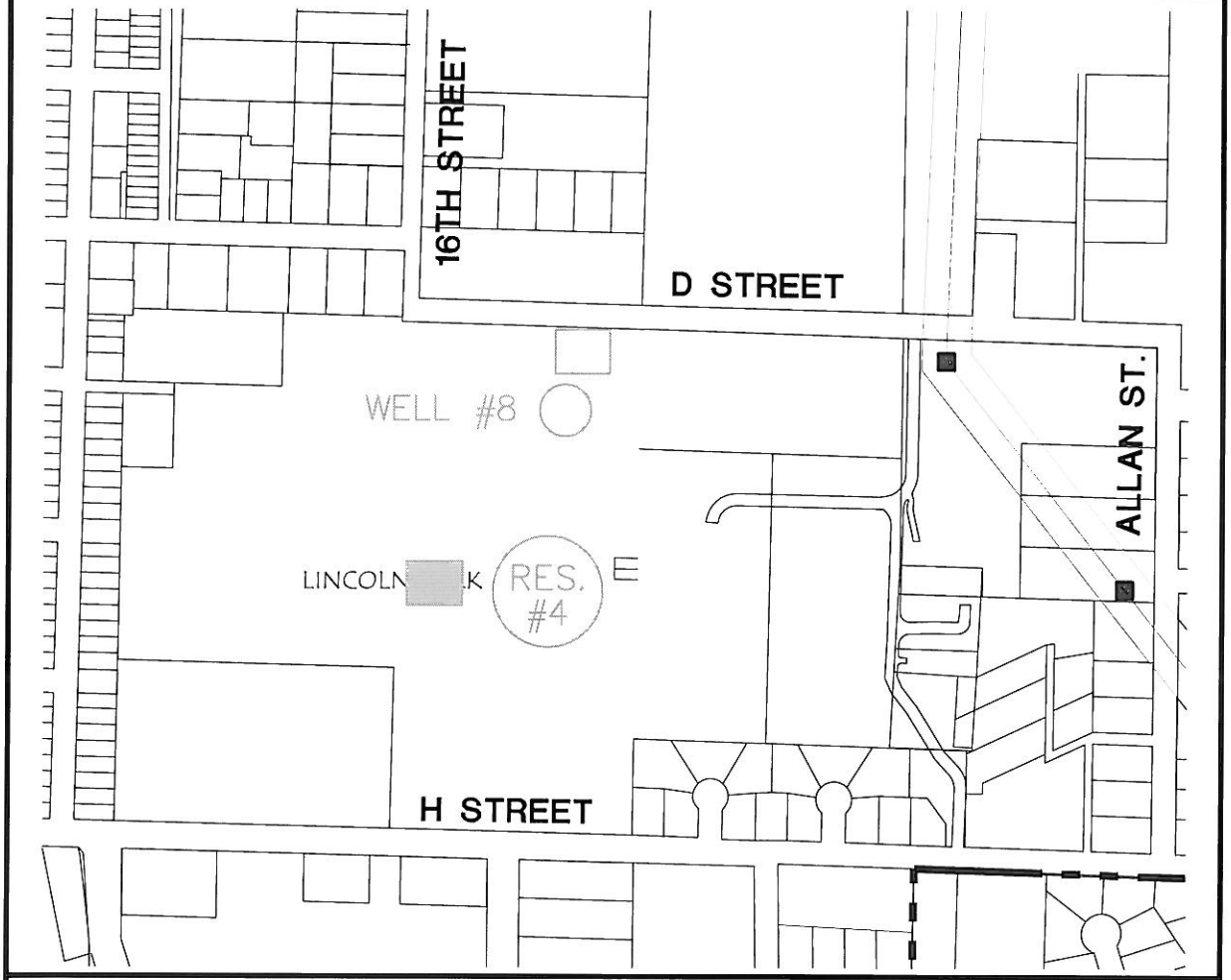

ESTIMATED PROJECT DATE: 2011

ESTIMATED PROJECT COSTS

PROJECT COST:	
Construction	$ 90,000
Engineering, Administration & Sales Tax	$ 25,000
TOTAL	$ 115,000

CHAPTER 9

FINANCIAL PROGRAM

The City has operated its water system since it was first constructed in the 1920s under the laws governing municipal entities. The City has also been its own treasurer since the City was incorporated in the 1890s. The City is responsible for managing its own financing, investment and accounting functions for the water system as well as other departments.

9.1 PAST AND PRESENT FINANCIAL STATUS

Table 9.1 presents a summary of The City's operating performance for the period 2003-2008 as well as the adopted 2009 budget.

TABLE 9.1
City of Blaine
HISTORY OF OPERATING BUDGET
($)

	Budget 2009	Actual 2008	Actual 2007	Actual 2006	Actual 2005	Actual 2004	Actual 2003
Operating Revenue							
Rates	1,377,426	1,360,156	1,294,230	1,316,570	1,132,928	1,271,327	1,149,900
Misc. Revenues	56,100	65,993	63,307	104,753	172,602	144,378	169,686
Interest Revenues	6,328	3,793	26,923	35,140	27,553	24,779	33,692
Total Cash Revenues	1,439,854	1,429,941	1,384,460	1,456,463	1,333,083	1,440,485	1,353,278
Operating Expense							
Administrative	142,118	119,400	87,040	106,318	94,545	82,404	76,545
Maintenance	619,032	510,868	487,930	397,016	288,391	331,414	294,053
Debt Service	169,887	168,883	167,278	229,760	228,573	237,205	212,762
Add. Operating Fund	395,450	361,437	363,724	362,625	358,027	309,389	268,673
Reserve Funding	190,000	300,000	500,000	500,000	500,000	500,000	320,000
Capital Funding	0	0	0	112,000	112,000	112,000	0
Total Cash Expenses	1,516,487	1,460,588	1,605,972	1,707,719	1,581,535	1,572,411	1,172,033
Surplus/(Deficit)	(76,633)	(30,647)	(221,512)	(251,256)	(248,453)	(131,927)	181,245

TABLE 9.1
City of Blaine
HISTORY OF OPERATING BUDGET, continued
($)

	Budget 2009	Actual 2008	Actual 2007	Actual 2006	Actual 2005	Actual 2004	Actual 2003
Annual Debt Payment	169,887	168,883	167,278	229,760	228,573	237,205	212,762
Year End Fund Balances							
Operating Fund	146,557	223,190	253,836	475,348	726,604	975,057	1,106,984
Reserve Fund	1,718,875	3,728,875	3,219,302	2,871,755	3,107,362	2,285,651	1,596,941
Bond Guaranty Fund	425,780	425,780	417,750	396,735	378,383	368,067	571,570
Rate Stabilization Fund	175,450	172,706	153,234	145,525	138,794	135,009	132,194
CIP Fund	40,661	751,584	898,934	1,127,789	879,763	914,031	762,492
Total of All Funds	**2,507,323**	**5,302,135**	**4,943,056**	**5,017,152**	**5,230,906**	**4,677,815**	**3,338,074**

The City has historically maintained a strong financial base. It currently has $169,857 outstanding in Water Revenue Refunding Bond (December 2009). Cash and receivables on hand in the Water Fund as of the end of December 2008 totaled $5,302,135, with the funds distributed as follows:

- Operating Fund: $ 223,190
- Capital Reserve Fund: $3,728,875
- Bond Guaranty Fund: $ 425,780
- Rate Stabilization Fund: $ 172,706
- Water CIP Fund: $ 751,584

9.2 AVAILABLE REVENUE SOURCES

There are four principal ways that the improvements outlined in this plan can be financed and each of these methods is discussed in the following subsections. Rates and charges must be maintained at adequate levels to ensure, at a minimum, sufficient funds are available to make payments to bondholders, provide for debt service coverage as specified in bond covenants and to properly maintain and operate the system. In addition, funds must be available for the construction of the improvements identified in the City's Comprehensive Water System Plan through a combination of cash contributions and debt financing.

The City recently completed a rate study including consideration of future operating and capital improvement funding needs. The attached study summary was prepared in October 2009 for the period 2009 through 2018, prior to finalization of the projects

proposed in Chapter 8. However, the study and this plan are based on essentially the same order of magnitude of anticipated water system capital costs. The capital projects considered in the study attachment amount to $23,150,000 whereas the 10-year CIP presented in Chapter 8 totals $22,004,000 (assuming two of the post-2016 water main projects are included in the 10-year CIP).

9.2.1 Developer Financing

Developers of presently unimproved property will finance many of the new facilities constructed in the City. All of the improvements required for service to property within new plats or commercial and industrial developments will be designed and constructed in accordance with the City's *Development Guidelines and Public Works Standards.* In some cases, latecomer's agreements may be executed for water mains that serve properties other than the property owned by the developer.

9.2.2 Combination Financing by the City and Developers

It may be necessary, in some cases, to require the developer to construct a larger diameter line than is required to serve his/her property in order to provide for the comprehensive development of the City. The City may enter into a latecomer's agreement or reimburse the developer for the extra cost of increasing the size of the line over that required to service the property under development. Oversizing policies should be considered when it is necessary to construct any pipe over 8 inches in diameter in single-family residential areas to comply with the water system plan. Construction of any pipe in multi-family, commercial or industrial areas that is larger than the size required to serve that development is considered oversizing.

9.2.3 Revenue Bonds

Transmission lines and improvements to supply and storage facilities that are of a general benefit to a major portion of the City may be financed by revenue bonds. Improvements that will primarily benefit a single developer should be financed by the developer developing the property. The City may use whatever funds are available for the payment of the debt service on the revenue bonds. A major source of these funds is from the sale of water to City customers. However, all funds, such as general facility fees, connection charges or latecomer charges, may be used for debt service.

Water distribution improvements that will cause extraordinary increases in the value of the properties receiving service may be financed through the establishment of a local improvement District (LID). The financing is accomplished through the sale of revenue bonds. These bonds are retired with income from participant assessments and/or other funds of the City.

9.2.4 Grant/Loan Funds

There are various State and Federal programs for providing loans and grants for the construction of major improvements to, or for, the rehabilitation of water systems. The primary programs available to the City at this time are the Drinking Water State Revolving Fund and the Public Works Trust Fund. Currently, the City has adequate funds in the Capital Improvements Fund for approximately one-fourth (in dollars) of the projects listed in the 10-year CIP. Therefore, the City will be considering all State or Federal programs, or any new grant or loan programs that may be developed in the future.

9.3 ALLOCATION OF REVENUE SOURCES

Following the adoption of this plan, the City will update its general facilities charge (GFC) calculation to support the updated CIP. As described in Section 9.2, projects will be supported by revenue from GFCs, developer projects and contributions from water service charges. Preparation of the GFC calculation, including an evaluation of alternative methods of calculation, will consider the extent to which the various revenue sources can be used to support each project. This proportion is generally based on the purpose of the project (e.g., serve growth, renew existing facilities, etc.).

9.4 PROGRAM JUSTIFICATION

The City is currently in the process of updating its water rate model with an outside consultant. The water rate model will project revenue requirements for 10 years by factoring in every aspect of the City's financial activity that is related to the water system. The water rate model will include all uses and sources of funds and will make assumptions regarding growth, cost of living increases, debt issuance costs, GFC rate increases and changes in the water consumption tiers. The model will then project the operating revenue required to meet the costs of operation and maintenance, capital improvements and payment of debt service. If a rate increase is called for, the model will project the necessary increase to meet the revenue requirements. It is recommended that the City continue to update the water rate model each year with new projects and activities in order to confidently make growth and revenue forecasts that will adequately support the revenue requirements of the City.

9.5 ASSESSMENT OF RATES

The City promotes water conservation by devoting financial and staff resources in a year-round program of public education and advertising. In addition, a two-tiered "block rate" structure encourages prudent water use because of the increasing cost for water at each successive tier. Ongoing operating and maintenance expense is recovered through a monthly basic charge of $10.83 for each account. This includes up to 300 cubic feet (3 ccf) of water. Additional consumption beyond 3 ccf is charged at $1.70 per ccf for consumption between 3 and 8 ccf, and $2.28 per ccf for consumption greater than 8 ccf. The water rate study is reviewing these tier levels to determine if they are appropriate or should be modified.

As stated in section 9.4, rates are reviewed annually through the revenue requirements model to insure adequate funds are available to meet the City's revenue requirements in regard to the operation of the water system. Once the annual review is completed, it can be determined if rate increases will need to be assessed to account for the revenue needs of the City.

City of Blaine
Water Rate Study
Summary

Capital Funding	2008	2009	2010	2011	2012	2013	2014	2015	2016	2017	2018
Total Capital Projects	**$ 58,148**	**$ 60,000**	**$ 868,400**	**$ 4,477,824**	**$ 356,019**	**$ 2,413,798**	**$ 7,154,517**	**$ 6,741,640**	**$ 326,372**	**$ 339,427**	**$ 353,004**
Grants and Developer Donations	$ -	$ -	$ -	$ 2,379,520	$ -	$ 701,915	$ 6,204,930	$ -	$ -	$ -	$ -
PWTF Loan Proceeds	-	-	-	-	-	-	-	-	-	-	-
Other Debt Proceeds	-	-	-	-	-	-	-	-	-	-	-
Revenue Bond Proceeds	-	-	-	-	-	-	-	-	-	-	-
Use of Capital Fund Balance	58,148	60,000	868,400	2,098,304	356,019	1,711,883	38,917	-	-	-	-
Direct Rate Funding	-	-	-	-	-	-	910,670	6,741,640	326,372	339,427	353,004
Total Funding Sources	**$ 58,148**	**$ 60,000**	**$ 868,400**	**$ 4,477,824**	**$ 356,019**	**$ 2,413,798**	**$ 7,154,517**	**$ 6,741,640**	**$ 326,372**	**$ 339,427**	**$ 353,004**

Revenue Requirements	2008	2009	2010	2011	2012	2013	2014	2015	2016	2017	2018
Revenues											
Rate Revenues Under Existing Rates	$ 975,253	$ 965,309	$ 965,840	$ 985,156	$ 1,004,859	$ 1,024,957	$ 1,045,456	$ 1,066,365	$ 1,087,692	$ 1,109,446	$ 1,131,635
Wholesale Rate Revenue	384,903	412,117	412,343	424,714	437,455	450,579	464,096	478,019	492,360	507,130	522,344
Non-Rate Revenues	68,585	62,428	135,949	144,158	137,955	141,421	144,978	148,629	152,385	156,231	160,179
Total Revenues	**$ 1,428,741**	**$ 1,439,854**	**$ 1,514,132**	**$ 1,554,028**	**$ 1,580,270**	**$ 1,616,956**	**$ 1,654,530**	**$ 1,693,013**	**$ 1,732,437**	**$ 1,772,808**	**$ 1,814,159**
Expenses											
Cash O&M Expenses	$ 933,558	$ 1,091,747	$ 960,587	$ 993,676	$ 1,027,939	$ 1,063,420	$ 1,099,732	$ 1,136,880	$ 1,174,359	$ 1,213,110	$ 1,253,177
Existing Debt Service	168,937	169,587	172,137	73,928	73,925	73,725	10,855	10,435	-	-	-
New Debt Service	-	-	-	-	-	-	546,360	546,360	546,360	546,360	546,360
Rate Funded System Reinvestment	-	-	-	-	-	-	-	-	-	-	-
Rate Funded CIP	-	-	-	-	-	-	-	-	-	-	-
Total Expenses	**$ 1,102,494**	**$ 1,261,334**	**$ 1,132,724**	**$ 1,067,603**	**$ 1,101,864**	**$ 1,137,145**	**$ 1,656,947**	**$ 1,693,675**	**$ 1,720,719**	**$ 1,759,470**	**$ 1,799,537**
Annual Rate Adjustment	0.00%	0.00%	0.00%	3.00%	3.00%	3.00%	2.25%	0.00%	0.00%	0.00%	0.00%
Rate Increases Dictated by:	*Policy*	*Policy*	*Policy*	*Policy*	*Policy*	*Policy*	*Analysis*	*Analysis*	*Analysis*	*Analysis*	*Analysis*
Rate Revenues After Rate Increase	$ 1,360,156	$ 1,377,426	$ 1,378,183	$ 1,439,425	$ 1,503,511	$ 1,570,577	$ 1,632,185	$ 1,669,470	$ 1,707,640	$ 1,746,716	$ 1,786,722
Net Cash Flow After Rate Increase	326,247	178,520	373,972	508,542	532,164	567,415	112,779	127,422	131,868	136,040	139,927
Coverage After Rate Increases	3.57	2.72	3.77	9.05	8.89	9.49	1.25	1.61	1.28	1.28	1.28

Fund Balances	2008	2009	2010	2011	2012	2013	2014	2015	2016	2017	2018
Operating Fund	$ 297,030	$ 199,464	$ 635,139	$ 326,199	$ 336,941	$ 348,046	$ 359,528	$ 371,701	$ 383,981	$ 396,679	$ 409,809
Capital Fund	3,656,865	4,029,347	2,880,703	1,711,301	1,954,293	884,146	7,089,715	703,897	607,718	502,973	386,882
Debt Reserve Fund	425,775	232,478	54,590	56,228	57,915	59,652	607,802	615,601	634,069	653,091	672,683
Total	**$ 4,379,670**	**$ 4,461,289**	**$ 3,570,431**	**$ 2,093,728**	**$ 2,349,149**	**$ 1,291,844**	**$ 8,057,045**	**$ 1,691,198**	**$ 1,625,767**	**$ 1,552,743**	**$ 1,469,374**
Combined Minimum Target Balance	*$ 602,329*	*$ 641,335*	*$ 608,994*	*$ 518,577*	*$ 526,631*	*$ 534,760*	*$ 1,026,861*	*$ 1,025,135*	*$ 1,034,346*	*$ 1,043,869*	*$ 1,053,717*

CHAPTER 10

MISCELLANEOUS DOCUMENTS

10.1 STATE ENVIRONMENTAL POLICY ACT (SEPA)

A SEPA checklist has been prepared in support of the City's proposed action to adopt this water system plan. The City is the Lead Agency and the City's SEPA Manager is the designated SEPA official. The City reviewed the checklist and issued a Determination of Non-significance (DNS) prior to adoption of the plan and submittal for review by DOH and other agencies. A copy of the DNS is included in Appendix N.

10.2 OTHER DOCUMENTS

Other documents as referenced throughout the plan are included in the appendices which are included in Volume 2. These documents include, but are not limited to:

- Agreements with Birch Bay Water and Sewer District and Bell Bay Jackson Water Association
- Water Service Outside City Limits Policy
- Water Supply Emergency Response Action Plan
- Coliform Monitoring Plan
- Cross-Connection Control Program

10.3 REFERENCES

The following references were used in the creation of this plan.

- *Washington State Department of Health - Group A Public Water Systems Chapter 246-290 WAC*
- *Washington State Department of Health - Water System Design Manual, April 2001*
- *Washington State Department of Health - Conservation Planning Requirements, March 1994*
- *Washington State Department of Health – Water Use Efficiency Guide Book, July 2007*
- *Whatcom County - Coordinated Water System Plan, February 2000*
- *Whatcom County - Comprehensive Plan, May 1997 (Revised 2005)*
- *City of Blaine - Comprehensive Water System Plan, August 1989*
- *City of Blaine - Comprehensive Water System Plan, Final Draft, June 1994*
- *City of Blaine - Comprehensive Water System Plan, April 1996*
- *City of Blaine – Ground Water Management Plan, June 1994*
- *Birch Bay Water and Sewer District - Comprehensive Water System Plan, March, 2009*

City of Blaine

Comprehensive Water System Plan

Appendices

November 2009

Volume 2 of 2

CHS ENGINEERS, LLC

APPENDICES

Appendix A	Water Facilities Inventory/Operation Permit
Appendix B	Agreements
Appendix C	Water Service Outside City Limits Policy
Appendix D	2009 Rate Structure and Fees
Appendix E	2008 Consumer Confidence Report
Appendix F	Well/Water Rights Information
	Ground Water Susceptibility Assessment Survey Forms
Appendix G	Chapter 3 – *Water Systems, East Blaine Subarea Infrastructure Plan for Streets, Water, Sewer and Stormwater (Draft)*
Appendix H	Storage Volume Calculations
Appendix I	Hydraulic Modeling Data
Appendix J	Water Supply Emergency Response Action Plan/Water System ERP
Appendix K	Coliform Monitoring Plan
Appendix L	Cross-Connection Control Program
Appendix M	Water System Design Standards, Construction Specifications and Standard Details
Appendix N	Review Comments

Washington State Department of Health
Division of Environmental Health
Office of Drinking Water

WATER FACILITIES INVENTORY (WFI) FORM

ONE FORM PER SYSTEM

Quarter 1
Updated: 11/25/2008
Printed: 09/29/2009
WFI Printed For: On-demand
Submission Reason: Annual Update

RETURN TO: Northwest Regional Office, 20435 72nd Ave S STE 200, Kent, WA, 98032

1. SYSTEM ID NO	2. SYSTEM NAME	3. COUNTY	4. GROUP	5. TYPE
07300 U	BLAINE, CITY OF	WHATCOM	A	Comm

6. PRIMARY CONTACT NAME & MAILING ADDRESS

LEROY DOUGALL [PUBLIC WORKS SUPE
1200 YEW AVE
BLAINE, WA 98230

STREET ADDRESS IF DIFFERENT FROM ABOVE
ATTN
ADDRESS
CITY STATE ZIP

7. OWNER NAME & MAILING ADDRESS **8. Owner Number** 000524

BLAINE, CITY OF
LEROY DOUGALL
1200 YEW AVE
BLAINE, WA 98230
TITLE: OWNER ORG - PRI

STREET ADDRESS IF DIFFERENT FROM ABOVE
ATTN
ADDRESS
CITY STATE ZIP

9. 24 HOUR PRIMARY CONTACT INFORMATION		10. OWNER CONTACT INFORMATION	
Primary Contact Daytime Phone: (360) 332-8820		Owner Daytime Phone: (360) 332-8820	
Primary Contact Mobile/Cell Phone:		Owner Mobile/Cell Phone:	
Primary Contact Evening Phone: (xxx)-xxx-xxxx		Owner Evening Phone:	
Fax:	E-mail: LDougall@cityofblaine.com	Fax:	E-mail:

WAC 246-290-420(9) requires that water systems provide 24-hour contact information for emergencies.

11. SATELLITE MANAGEMENT AGENCY - SMA (check only one)

- [X] Not applicable (Skip to #12)
- [ ] Owned and Managed
- [ ] Managed Only
- [ ] Owned Only

SMA NAME: _____ SMA Number: _____

12. WATER SYSTEM CHARACTERISTICS (mark ALL that apply)

[X] Agricultural	[X] Hospital/Clinic	[X] Residential
[X] Commercial / Business	[X] Industrial	[X] School
[X] Day Care	[X] Licensed Residential Facility	[ ] Temporary Farm Worker
[X] Food Service/Food Permit	[X] Lodging	[X] Other (church, fire station, etc.):
[ ] 1,000 or more person event for 2 or more days per year	[ ] Recreational / RV Park	

13. WATER SYSTEM OWNERSHIP (mark only one)

[ ] Association	[ ] County	[ ] Investor	[ ] Special District
[X] City / Town	[ ] Federal	[ ] Private	[ ] State

14. STORAGE CAPACITY (gallons)

4,700,000

--- SEE NEXT PAGE FOR A COMPLETE LIST OF SOURCE

WATER FACILITIES INVENTORY (WFI) FORM - Continued

1. SYSTEM ID NO	2. SYSTEM NAME	3. COUNTY	4. GROUP	5. TYPE
07300 U	BLAINE, CITY OF	WHATCOM	A	Comm

15	16	17	18										19			20	21						22	23	24			
	SOURCE NAME	INTERTIE	SOURCE CATEGORY										USE				TREATMENT						DEPTH		SOURCE LOCATION			
Source Number	LIST UTILITY'S NAME FOR SOURCE AND WELL TAG ID NUMBER. Example: WELL #1 XYZ456 IF SOURCE IS PURCHASED OR INTERTIED, LIST SELLER'S NAME Example: SEATTLE	INTERTIE SYSTEM ID NUMBER	WELL	WELL FIELD	WELL IN A WELL FIELD	SPRING	SPRING FIELD	SPRING IN SPRINGFIELD	SEA WATER	SURFACE WATER	RANNEY / INF. GALLERY	OTHER	PERMANENT	SEASONAL	EMERGENCY	SOURCE METERED	NONE	CHLORINATION	FILTRATION	FLUORIDATION	IRRADIATION (UV)	OTHER	DEPTH TO FIRST OPEN INTERVAL IN FEET	CAPACITY (GALLONS PER MINUTE)	1/4, 1/4 SECTION	SECTION NUMBER	TOWNSHIP	RANGE
S01	InAct 06/04/1999 WELL #1 Abando		X										X				X						745	0	NE SE	03	40N	01E
S02	WELL #2		X										X			Y		X					605	156	NE SE	04	40N	01E
S03	WELL #3		X											X		Y		X					75	200	NW SW	03	40N	01E
S04	WELL #4		X										X			Y		X					97	200	NW SW	03	40N	01E
S05	WELL #5		X										X			Y		X					265	335	NE SE	04	40N	01E
S06	WELL #8 Lincoln Park		X											X		Y	X						174	100	SE SE	31	41N	01E
S07	WELL #7 12th Street		X											X		Y	X						177	243	SW SE	31	41N	01E
S08	WELL #6		X										X			Y	X						245	80	NW SE	04	40N	01E
S09	InAct 06/04/1999 WELL #9 Boblett		X										X				X						160	0	NE NE	05	40N	01E
S10	WELL #1R Unapproved		X										X			Y		X					706	450	NE SE	04	40N	01E
S11	WELL #3R Unapproved		X										X			Y		X					560	500	NW SW	04	40N	01E
S12	WELL #5.1		X												X	Y		X					713	300	NE SE	04	40N	01E
S13	WELL #4.1 Unapproved		X										X			Y		X					99	200	NW SW	03	40N	01E
S14	InAct 10/23/2008 WELL # 8.1		X										X			N	X							280			00N	00E

WATER FACILITIES INVENTORY (WFI) FORM - Continued

1. SYSTEM ID NO	2. SYSTEM NAME	3. COUNTY	4. GROUP	5. TYPE
07300 U	BLAINE, CITY OF	WHATCOM	A	Comm

	ACTIVE SERVICE CONNECTIONS	DOH USE ONLY! CALCULATED ACTIVE	DOH USE ONLY! APPROVED CONNECTIONS
25. SINGLE FAMILY RESIDENCES (How many of the following do you have?)	0	2135	Unspecified
A. Full Time Single Family Residences (Occupied 180 days or *more* per year)	2072		
B. Part Time Single Family Residences (Occupied *less than* 180 days per year)	0		
26. MULTI-FAMILY RESIDENTIAL BUILDINGS (How many of the following do you have?)			
A. Apartment Buildings, condos, duplexes, barracks, dorms	0		
B. Full Time Residential Units in the Apartments, Condos, Duplexes, Dorms that are occupied *more than* 180	63		
C. Part Time Residential Units in the Apartments, Condos, Duplexes, Dorms that are occupied *less than* 180	0		
27. NON-RESIDENTIAL CONNECTIONS (How many of the following do you have?)			
A. Recreational Services and/or Transient Accommodations (Campsites, RV sites, hotel/motel/overnight units)	19	19	
B. Institutional, Commercial/Business, School, Day Care, Industrial Services, etc.	281	281	
28. TOTAL SERVICE CONNECTIONS		2435	

29. FULL-TIME RESIDENTIAL POPULATION

A. How many residents are served by this system 180 or *more* days p: 4855

30. PART-TIME RESIDENTIAL POPULATION	JAN	FEB	MAR	APR	MAY	JUN	JUL	AUG	SEP	OCT	NOV	DEC
A. How many part-time residents are present each month?												
B. How many days per month are they present?												

31. TEMPORARY & TRANSIENT USERS	JAN	FEB	MAR	APR	MAY	JUN	JUL	AUG	SEP	OCT	NOV	DEC
A. How many total visitors, attendees, travelers, campers, patients or customers have access to the water system each month?												
B. How many days per month is water accessible to the public?												

32. REGULAR NON-RESIDENTIAL USERS	JAN	FEB	MAR	APR	MAY	JUN	JUL	AUG	SEP	OCT	NOV	DEC
A. If you have schools, daycares, or businesses connected to your water system, how many students daycare children and/or employees are present each month?	1450	1450	1450	1450	1450	1450	1450	1450	1450	1450	1450	1450
B. How many days per month are they present?	20	20	20	20	20	20	20	20	20	20	20	20

33. ROUTINE COLIFORM SCHEDULE	JAN	FEB	MAR	APR	MAY	JUN	JUL	AUG	SEP	OCT	NOV	DEC
	7	7	7	7	7	7	7	7	7	7	7	7

35. Reason for Submitting WFI:

☐ Update - Change ☐ Update - No Change ☐ Inactivate ☐ Re-Activate ☐ Name Change ☐ New System ☐ Other _____

36. I certify that the information stated on this WFI form is correct to the best of my knowledge.

SIGNATURE: _____ **DATE:** _____

PRINT NAME: _____ **TITLE:** _____

Certificate of Competency

Leroy Eugene Dougall

is hereby certified as a Water Works Operator in the State of Washington. This individual has met the established qualifications of the Washington State Department of Health and has passed the Water Works Operator Certification exam for this classification.

Classification: Water Distribution Manager 2

Certificate Number: 004759

Cheryl L. Bergener
Water Works Certification Program Manager

October 7, 1991
Date

This certificate shall be in full force and effect when accompanied by an annual validation card.

Washington State Department of Health
Environmental Health Programs
Division of Drinking Water

HELPING TO ENSURE SAFE AND RELIABLE DRINKING WATER

AGREEMENT FOR WHOLESALE SUPPLY OF WATER

This Agreement for the wholesale supply of water between the City of Blaine ("City") and the Birch Bay Water & Sewer District ("District"), two municipal corporations organized under the laws of the State of Washington, is effective this 2 day of April, 2002.

ARTICLE 1. RECITALS

1.01 Pursuant to Title 35 and Title 35A RCW, the City is authorized to contract for the wholesale provision of water to another municipal corporation.

1.02 Pursuant to Title 57 RCW, the District is authorized to contract for the purchase of wholesale water from another municipal corporation.

1.03 The District has historically purchased its potable water supply from the City and put said water to beneficial use.

1.04 The City is willing to sell potable water to the District under the terms and conditions set forth herein.

1.05 The District is willing to purchase potable water from the City under the terms and conditions set forth herein.

1.06 The City has determined it presently has sufficient Water Rights and has provided or intends to provide sufficient system capacity to sell potable water to the District under the terms and conditions set forth herein.

1.07 The City and the District intend to cooperate in the management and future development of water resources in the City's watershed.

1.08 The foregoing recitals are a material part of this Agreement.

ARTICLE 2. AGREEMENT

The City agrees to sell and the District agrees to purchase a wholesale supply of potable water according to the following terms and conditions. All exhibits attached hereto are hereby fully incorporated herein as terms of this Agreement.

ARTICLE 3. DEFINITIONS

3.01 "Average Cost of Maximum Day Capacity." The Fixed Charge divided by the Estimated Maximum Day Demand. This cost is expressed as a cost per gallon per day ("gpd").

3.02 "Average Wholesale Cost of Water." The total wholesale cost of water as calculated pursuant to the rate methodology in Exhibit 1, divided by Estimated Annual Quantity.

3.03 "AWWA Standards." The most recent edition of the standard for waterwork products and procedures as prepared and published by the American Water Works Association, Denver, Colorado.

3.04 "Birch Point Connection." The wholesale service connection to the District on Birch Point, served by City meter number 31-0300.0 or its successor at the same location.

3.05 "Calendar year." The entire twelve month period beginning January 1 and ending December 31.

3.06 "Capital Costs." The City's costs of capital associated with operating the Water Supply System. Capital Costs are more specifically described in Exhibit 1, and include depreciation and return on rate base. Capital costs shall not include any fines, penalties, interest, litigation costs, judgments, or settlements caused by the willful or negligent actions of the City, nor any costs for City water conservation programs. Capital costs may include the costs of future hydrogeologic studies and/or any analysis intended to evaluate Sustainable Yield, which are mutually agreed upon and jointly directed by the Parties. Each Party shall bear its own costs of such studies and analysis which are not mutually agreed upon and jointly directed by the Parties.

3.07 "City Assets." Those Water Supply System Assets that serve only the City and its retail customers, as well as the Birch Point Connection. City Assets provide no service to the District through its Main Wholesale Connection. The capital letter "C" is used to designate City Assets in Exhibit 1.

3.08 "City Meter(s)." City owned meters located at the Main Wholesale Connection, the Birch Point Connection, and any other additional or alternate connections hereafter established, which will measure the quantity and flow of water provided to the District by the City.

3.09 "Contract Annual Quantity." The maximum quantity of potable water the City shall make available to supply the District during the course of a Calendar year. The Contract Annual Quantity shall be expressed in acre feet per year ("af/yr").

3.10 "Contract Demand." The maximum quantity of potable water the City shall make available to supply the District on a daily and annual basis in any Calendar year or portion thereof during which this Agreement is in effect, subject to any required Shared Reduction in Use. Water is made "available to supply the District" when it is delivered by the City and withdrawn by the District at the Main Wholesale Connection, the Birch Point Connection and any additional or alternate connections established pursuant to this Agreement at the required pressure, measured in pounds per square inch ("psi"), set forth herein. Contract Demand shall include two components: Contract Annual Quantity and Contract Maximum Day Demand. The Contract Demand will not change from year to year, unless it is adjusted in accordance with this Agreement.

3.11 "Contract Maximum Day Demand." The maximum quantity of potable water the City shall make available to supply the District on any single day (midnight to midnight) in a given Calendar year during the term of this Agreement, subject to any required Shared Reduction

in Use. Contract Maximum Day Demand will remain constant throughout the term of this Agreement, unless Contract Demand is adjusted in accordance with this Agreement. Contract Maximum Day Demand shall be expressed in gallons per day ("gpd").

3.12 "Customer Function." Those Capital Costs and O&M Costs associated with serving customers of the Water Supply System, as opposed to serving the water demands of the Water Supply System. Common Customer Function costs include the costs of point of service meters and billing.

3.13 "Declaration of Supply Shortage." A written statement from the City to the District declaring the existence of a Supply Shortage (Short-Term or Long-Term), the complete factual basis therefor, the new water quantities available to each Party after each Parties' Shared Reduction in Use, and the expected duration that Shared Reduction in Use shall be required.

3.14 "District Assets." Those Water Supply System Assets that serve only the District as a wholesale customer. Only the master meters at the Main Wholesale Connection are classified as District Assets as of the date of this Agreement. The capital letter "D" is used to designate District Assets in Exhibit 1.

3.15 "Estimated Annual Quantity." The estimated quantity of potable water that the District will require from the City during the course of a Calendar year. The Estimated Annual Quantity is a component of Estimated Demand and as a component thereof it is anticipated to change on an annual basis during the term of this Agreement. The Estimated Annual Quantity shall be expressed in acre feet per year ("af/yr").

3.16 "Estimated Demand." The estimated quantity of potable water the City shall make available to supply the District each Calendar year or portion thereof during which this Agreement is in effect. Water is made "available to supply the District" when it is delivered by the City and withdrawn by the District at the Main Wholesale Connection, the Birch Point Connection, and any additional or alternate connections established pursuant to this Agreement at the required pressure, measured in pounds per square inch ("psi"), set forth herein. Estimated Demand shall include two components: Estimated Annual Quantity and Estimated Maximum Day Demand. The District shall notify the City of its Estimated Annual Quantity and Maximum Day Demand each year, as provided in Section 5.02. It is anticipated that the Estimated Demand components will change from year to year. During a Shared Reduction in Use, Estimated Demand shall be the equivalent of Reduced District Demand.

3.17 "Estimated Maximum Day Demand." The estimated quantity of potable water that the District will require from the City on any single day (midnight to midnight) in a given Calendar year during the term of this Agreement. Estimated Maximum Day Demand is a component of Estimated Demand, and as a component thereof it is anticipated to change on an annual basis during the term of this Agreement. The Estimated Maximum Day Demand shall be expressed in gallons per day ("gpd").

3.18 "Excess Annual Quantity." Excess Annual Quantity exists only in those Calendar years, if any, in which actual water used exceeds the Estimated Annual Quantity for said Calendar year, as measured by City Meters. When it exists, Excess Annual Quantity is the

difference between the Estimated Annual Quantity and the actual quantity of water used in said Calendar year.

3.19 "Excess Maximum Day Demand." When it exists, Excess Maximum Day Demand is the difference between a single day's actual water demand (midnight to midnight) and Estimated Maximum Day Demand, as measured by City Meters. Excess Maximum Day Demand exists only on those days, if any, in which actual water demand exceeds Estimated Maximum Day Demand.

3.20 "Fire Function." Those Capital Costs and O&M Costs associated with delivering the rate of water flow required to address a fire event within the Water Supply System. Common Fire Function costs include the costs of hydrants, standpipes, storage facilities, and main upsizing to accommodate fire flow.

3.21 "Fixed Charge." The sum of the City's Fixed O&M Costs plus the City's Capital Costs, incurred during the Calendar year.

3.22 "Fixed O&M Costs." O&M Costs other than Variable O&M Costs. Fixed O&M Costs are more specifically described in the rate study incorporated herein as Exhibit 1.

3.23 "General Assets." Those Water Supply System Assets necessary for the operation of the Water Supply System and which are accounted as assets of the City's water utility in the City's accounting system. Examples of General Assets include maintenance trucks, fences, and some planning documents. The capital letter "G" is used to designate General Assets in Exhibit 1.

3.24 "Installed Capacity." Installed Capacity is expressed in terms of maximum daily production, stated in millions of gallons per day ("mgd"). For 2002, the Installed Capacity is 3.19 mgd.

3.25 "Joint Assets." Those Water Supply System Assets that serve the City, the District, and other City wholesale customers. The capital letter "J" is used to designate Joint Assets in Exhibit 1.

3.26 "Long-Term Supply Shortage." A Supply Shortage caused by a significant and meaningful actual decline in Sustainable Yield, determined in accordance with Section 6.

3.27 "Main Wholesale Connection." The wholesale service connection to the District served by City meter numbers 25-0025.0 and 25-0026.0 or their successors at the same location, and such other connections as the District may require, subject to Section 6.01, excluding the Birch Point Connection, for delivery of wholesale water.

3.28 "Operation and Maintenance Costs" or "O&M Costs." The City's costs of operating the Water Supply System, excluding Capital Costs. Such costs include salaries and wages, fringe benefits, power, purchased services, rent, chemicals, other materials and supplies, equipment and interfund operating transfers. O&M costs allocated to the District shall not include any fines, penalties, interest, litigation costs, judgments, or settlements caused by the willful or negligent actions of the City, nor any costs for City water conservation programs.

O&M costs may include the costs of future hydrogeologic studies and/or any analysis intended to evaluate Sustainable Yield, which are mutually agreed upon and jointly directed by the Parties. Each Party shall bear its own costs of such studies and analysis which are not mutually agreed upon and jointly directed by the Parties. O&M Costs are more specifically described in the rate study incorporated herein as Exhibit 1.

3.29 "Party" or "Parties." The City and/or the District.

3.30 "Reduced City Demand," or "Reduced Demand" of City. The quantity of water from the Water Supply System available for use by the City on a maximum day and annual quantity basis following Declaration of a Supply Shortage for which good cause exists. In a Long-Term Supply Shortage, Reduced City Demand (R_C) for annual quantity shall equal Sustainable Yield (S) minus the Reduced District Demand (R_D) for annual quantity. This is expressed algebraically as $R_C = S-R_D$

3.31 "Reduced District Demand," or "Reduced Demand" of District. The quantity of water from the Water Supply System available for use by the District on a maximum day and annual quantity basis following Declaration of a Supply Shortage for which good cause exists. In a Long-Term Supply Shortage, Reduced District Demand (R_D) for annual quantity shall equal Contract Annual Quantity (C) times Sustainable Yield (S) divided by Ultimate Capacity (U). This is expressed algebraically as $R_D = CS/U$.

3.32 "Regulatory approval(s)." Any and all approvals, authorizations or permits from local, state or federal agencies, including any administrative or judicial appeals/litigation thereon, required to lawfully allow for the purchase, sale and use of potable water as described in this Agreement.

3.33 "Shared Reduction in Use." Contemporaneous reductions in water usage by the City and the District, in equal proportion, as required by this Agreement due to a Supply Shortage for which good cause exists.

3.34 "Short-Term Supply Shortage." A Supply Shortage caused by temporary failure of Water Supply System Assets.

3.35 "Static Water Level." The level at which water stands in a City well as measured in accordance with the following parameters: (a) no water shall be removed through other City wells constructed within the same aquifer containing said City well for a period of fourteen (14) consecutive days immediately prior to the date of measurement; and (b) the water level in said City well shall be measured during the same thirty (30) day period of low seasonal water usage each year of this Agreement. Within five (5) years of the effective date of this Agreement, the City shall construct two or more observation wells for the sole purpose of monitoring Static Water Level. After construction of said observation wells, Static Water Level shall be determined exclusively from measurements taken from said observation wells.

3.36 "Stranded Costs." Capital Costs of the Water Supply System not fully depreciated on the date of termination of this Agreement.

3.37 "Supply Function." All Capital Costs and O&M Costs of the Water Supply System other than Customer Function and Fire Function.

3.38 "Supply Meter." City owned meters located at each well head in the Water Supply System.

3.39 "Supply Shortage." Circumstances under which the City is unable, for good cause, to deliver water to the District under the terms of this Agreement. The term Supply Shortage shall not apply to causes identified in the force majeure provisions in Section 12.11 or temporary emergencies as described in Section 6.08. A Supply Shortage is either a Short-Term Supply Shortage or a Long-Term Supply Shortage.

3.40 "Sustainable Yield." The maximum amount of potable water available for use by the Water Supply System without causing significant reductions in long-term static water levels in the City's wells withdrawing water from those aquifers identified in the City's Water Rights. Sustainable Yield may vary from year to year. A reduction in static water levels shall not be considered long-term unless those static water levels experience significant reductions during three (3) out of five (5) consecutive years.

3.41 "Ultimate Capacity." The maximum quantity of water as of the date of this Agreement that the Joint Assets would be capable of producing under the City's Water Rights, as set forth in the Report of Examination for the City's Well no. 9, assuming that all assets necessary to fully utilize such Water Rights were in place. Ultimate Capacity is expressed as maximum day production and maximum annual quantity. As of the date of this Agreement, Ultimate Capacity for maximum day production is 4.2768 MGD and Ultimate Capacity for maximum annual quantity is 2560 acre feet per year.

3.42 "Variable Charge." The District's allocated Variable O&M Costs divided by the Estimated Annual Quantity to derive the wholesale volume charge for the Calendar year, as set forth in Exhibit 1.

3.43 "Variable O&M Costs." O&M costs which vary directly with the amount of water delivered. Variable O&M Costs consist of power and chemical costs and are described in Exhibit 1.

3.44 "Water Loss Factor." Water Loss Factor ("WLF") means the percentage share of water lost between the point of production and the point of sale to retail and wholesale customers. The WLF is the average volume of water produced over the prior three Calendar years by the Water Supply System minus the average volume of water sold over the prior three Calendar years by the City to its retail and non-district wholesale customers minus the average volume of water sold over the past three Calendar years to the District, divided by the Water Supply System's average volume of water produced over the prior three Calendar years. Further explanation of the WLF calculation is set forth in Exhibit 4, which is incorporated herein by this reference.

3.45 "Water Rights." Any and all permit applications, claims, permits, or certificates for any quantity of water on file with the State Department of Ecology now or in the future.

3.46 "Water Supply System." The City-owned and operated system that supplies potable water to the District, City, and other City wholesale customers. The Water Supply System includes all Water Supply System Assets.

3.47 "Water Supply System Assets." Those City owned and operated wells, pumps, transmission mains, water lines, treatment facilities, telemetry, production meters, land, equipment, vehicles, and certain storage reservoirs and planning documents, which are used in supplying potable water to the District, City and other City wholesale customers. Water Supply System Assets include all City Assets, District Assets, Joint Assets, and General Assets.

3.48 "Water System Plan." The comprehensive water system plan of the City and/or the District, including amendments thereto, required by State law and subject to approval by Whatcom County and the State Department of Health.

3.49 "Wholesale Contract Administration." Costs incurred under this Agreement associated with annual rate setting, cost reconciliation, and direct staff support thereof.

ARTICLE 4. SUPPLY AND PURCHASE OF WATER

4.01 The City shall treat and annually supply to the District the District's Estimated Demand or such portion thereof utilized by the District, according to the terms and conditions herein.

4.02 The District shall annually purchase from the City the District's Estimated Demand, subject to the terms and conditions herein.

4.03 The District shall be allowed to purchase and use water from the City in an annual quantity or maximum day less than its Estimated Demand without penalty and without prejudice to its ability to purchase water in future years.

ARTICLE 5. CONTRACT DEMAND

5.01 Contract Demand is established as follows. Contract Annual Quantity shall be 1,280 acre feet per year ("af/yr"). Contract Maximum Day Demand shall be 2.11 million gallons per day ("mgd"). One or both of these components of Contract Demand may be adjusted during the term of this Agreement only as described herein.

5.02 The District shall in its discretion forecast its demand for potable water based upon the projected demand set forth in the District's Water System Plan and other relevant information. The District's Estimated Demand for year 2002 is set forth in Exhibit 2. On September 1, 2002, and on September 1 of each and every year thereafter for the duration of this Agreement, the District shall provide written notice to the City of the District's Estimated Demand for the following Calendar year and each of the next four (4) years based upon demand projections in the District's current approved Water System Plan and other relevant information. In the event that the Estimated Demand exceeds the Contract Demand in any one of those five (5) years, the District may request that the City increase the Contract Demand pursuant to Section 5.03. Notwithstanding the provisions herein on setting Estimated Demand, in the event that a Declaration of Supply Shortage has been issued for good cause, the District's Estimated

6.02 The City shall install, own and operate all City's Meters and all Supply Meters. City Meters and Supply Meters shall be calibrated and tested by a certified tester annually in the presence of District representatives, if the District so chooses. The City shall maintain City Meters and Supply Meters to have a registration accuracy within the limits established in AWWA Standards for the corresponding type and size of meter used for City Meters and Supply Meters. The City shall provide the District written notice of the date of the annual calibration and testing at least ten (10) calendar days before the calibration and testing occurs. The City shall provide the District a copy of the calibration and testing report within thirty (30) days of the City's receipt of the report.

6.03 The City shall provide continuous supply and transmission service to the District, subject to the terms of this Agreement. For its retail water system, the District is responsible for supplying fire flow storage, standby storage in case of the temporary loss of a supply component, and equalization storage.

6.04 The District recognizes the obligation of the City to meet the needs of its citizens; therefore, if the City issues a Declaration of Supply Shortage for which good cause exists, the District and the City will share, in equal proportion, a reduction in water usage ("Shared Reduction in Use"), subject to Subsection (c) below. Good cause for any Declaration of Supply Shortage shall require the existence of such facts and circumstances which would lead an objective and reasonable person to conclude that a meaningful Supply Shortage actually exists, and that the requested reduction is necessary to properly manage the Water Supply System. Good cause for a Declaration of Supply Shortage that is a Long Term Supply Shortage shall also require, as conditions precedent to issuance of such a Declaration: (1) completion of an independent review of all relevant data, records, and studies by a hydrogeologist licensed in the State of Washington, jointly selected, funded and directed by the Parties, and (2) said independent review must conclude that there have been significant long-term reductions in the Sustainable Yield, as defined in Section 3.40.

(a) A Declaration of Supply Shortage must be issued before any Shared Reduction in Use may be required or implemented. For a Short-Term Supply Shortage, Shared Reduction in Use may be required immediately upon issuance of a Declaration of Supply Shortage for which good cause exists. For a Long-Term Supply Shortage, Shared Reduction in Use may be required or implemented no earlier than ninety (90) days after issuance of a Declaration of Supply Shortage for which good cause exists.

(b) Immediately upon issuance of a Declaration of Supply Shortage, the City shall promptly make available to the District for its review, inspection, and copying, all data, records, and documents of any kind ("records"), that are relevant to or may lead to the discovery of information relevant to the question of whether a Supply Shortage exists, including records that would otherwise be confidential or exempt from public disclosure requirements under Chapter 42.17 RCW; provided that, nothing herein shall require disclosure of any employee personnel files, the residential addresses and residential telephone numbers of the Parties' retail customers, or attorney-client privileged communications. In addition, the Parties shall develop and implement procedures to provide for the immediate and

continuous, ongoing sharing of such records and information, including without limitation all pumping data, so that the quantity of actual reduction in consumption by each Party on a daily and annual basis may be promptly verified by the other Party. The requirements of this Subsection are in addition to the requirements for routine information sharing in Section 10.03.

(c) Notwithstanding any other Section or Subsection in this Agreement, the District shall not be subject to any Shared Reduction in Use or Reduced District Demand for a Long-Term Supply Shortage that requires District usage to fall below a maximum day demand of 1,584,000 gpd ("Qi floor") nor an annual quantity of 1,280 af/yr ("Qa floor"); provided that, after February 25, 2013, a Reduced District Demand for a Long-Term Supply Shortage which is properly authorized in accordance with Section 6 may be established at less than the Qa floor of 1,280 af/yr. At no time will a Shared Reduction in Use or Reduced District Demand for a Long-Term Supply Shortage require a reduction in District usage below the Qi floor of 1,584,000 gpd.

6.05 A Shared Reduction in Use for any Short Term Supply Shortage shall mean that the District will reduce its Estimated Demand in the same percentage as is required of the City's retail service customers, based on each Party's most recent three (3) years of historical average day and annual consumption, measured from the date of a Declaration of Supply Shortage for which good cause exists. The Parties shall endeavor to develop coordinated approaches to shortage management in their comprehensive plans and shall work together to develop procedures to implement Short-Term Supply Shortage management in accordance with this Section.

6.06 A Shared Reduction in Use for a Long-Term Supply Shortage shall mean that the District and the City will restrict their water usage to the amounts specified herein as the Reduced District Demand and Reduced City Demand, respectively. A Shared Reduction in Use for a Long-Term Supply Shortage shall begin ninety (90) days after a Declaration of Supply Shortage (Long-Term) for which good cause exists.

6.07 Following a Declaration of Supply Shortage for which good cause exists and implementation of Shared Reduction in Use, the Parties shall periodically review and evaluate, no less frequently than annually, whether good cause continues to exist to support the Declaration of Supply Shortage.

(a) If at any time good cause exists to support a Declaration of Supply Shortage more severe than previously issued and a larger Shared Reduction in Use requirement is necessary, a new Declaration of Supply Shortage may be issued and a larger Shared Reduction in Use requirement may be implemented upon compliance with the procedures required in this Agreement for issuance of a Declaration of Supply Shortage in the first instance.

(b) If at any time good cause no longer exists to support the Declaration of Supply Shortage, the Declaration of Supply Shortage and Shared Reduction in Use

requirements shall promptly be amended to a lesser Shared Reduction in Use for which good cause exists, or if there is no longer good cause to support any Supply Shortage, the Declaration of Supply Shortage and Shared Reduction in Use shall promptly be rescinded and dissolved.

6.08 The City may temporarily interrupt or temporarily reduce delivery of water to the District, if the City, acting in good faith, determines that system emergencies or maintenance and repair so require. Except for in emergencies, the City shall give the District reasonable written notice of interruption or reduction, the reason therefore, and the likely duration thereof. The City shall make a good faith effort to perform routine maintenance in times when system usage is the lowest. Temporary interruptions or temporary reductions in delivery which exceed forty-eight (48) hours and do not fall within the provisions of Section 12.11 herein, shall comply with the provisions of this Agreement governing Supply System Shortages.

6.09 The quality of water supplied to the District pursuant to this Agreement shall meet or exceed all applicable federal and state rules and regulations governing water quality for Group A water systems. The City shall treat the water supplied to the District to meet or exceed current and future standards required by State adopted limits.

6.10 The City shall make best efforts to reduce and minimize unaccounted for water loss through meter inaccuracy, leaks, line flushing, fire fighting, and other uses.

ARTICLE 7. CONDITIONS OF SERVICE –THE DISTRICT

The District's demand upon the City's water supply shall not exceed the District's Contract Demand provided for in Section 5.01 herein, or as adjusted in conformance with this Agreement.

ARTICLE 8. BILLING

The City shall bill the District the Variable Charge and one-twelfth ($1/12^{th}$) of the Fixed Charge for water supplied by monthly invoice due and payable within thirty (30) days of the date hereof. Delinquent and unpaid balances shall bear interest at the prime rate plus four (4) percent, as published in the Wall Street Journal, compounded annually; except that the District shall not be obligated to pay an interest charge on invoices or portions of invoices that are being disputed or that are not agreed by the Parties.

ARTICLE 9. RATES AND COSTS

9.01 The rates for water supply services to be paid by the District to the City shall be determined in accordance with this Section and the rate methodology set forth in Exhibit 1.

9.02 No later than November 1 of each and every year for the duration of this Agreement, following receipt of written notice of the District's Estimated Demand as described in Section 5.02 herein, the City shall provide a written rate notice to the District of the rates the City will charge the District for meeting the District's Estimated Demand during the Calendar year beginning the following January 1. Said rates shall consist of a Fixed Charge and a

Variable Charge and shall be determined and charged in accordance with the rate methodology set forth in Exhibit 1.

9.03 Cost Reconciliation. At the time of the annual rate calculation and no later than the first day of November following the conclusion of each Calendar year during the term of this contract, the City shall perform the following cost reconciliation procedure: (1) the City shall determine its actual Fixed O&M Costs, Variable O&M Costs and Capital Costs during the Calendar year just concluded; (2) the City shall determine the actual amount of water delivered to the District and the total production of the Water Supply System during said just concluded Calendar year; (3) based on actual results, the City shall re-calculate the Fixed Charge, Variable Charge and total revenue owed by the District during the just concluded Calendar year; (4) an interest charge equal to eighteen (18) months at the weighted cost of capital shall be applied to the amount of overcharge or undercharge; (5) the City shall notify the District in writing of the results of such cost reconciliation and shall pay or credit the District for any overcharge or shall bill the District for any undercharge during the just concluded Calendar year. Reconciliation payments or credits shall be made no later than December 31 of each Calendar year. An example and further explanation of the cost reconciliation procedure is set forth in Exhibit 3.

9.04 Birch Point Surcharge. Potable water furnished to the District through the Birch Point Meter shall have a rate surcharge added to the wholesale rate based on volume. The rate surcharge shall be equal to 130% multiplied by the Average Wholesale Cost of Water per unit of volume. Said rate of surcharge shall not change during the term of this Agreement. See also Exhibit 1.

9.05 Penalty Charge. The Fixed Charge and Variable Charge presume wholesale deliveries at or below the Estimated Maximum Day Demand. Volumes delivered in excess of the Estimated Maximum Day Demand shall be subject to a penalty charge. Said penalty charge may be imposed not more than once per Calendar year. The penalty charge for Excess Maximum Day Demand shall be determined by multiplying the single largest Excess Maximum Day Demand in the Calendar year times the Average Cost of Maximum Day Capacity times a percentage based on the number of days in a Calendar year in which the Estimated Maximum Day Demand is exceeded, as set forth below. No Excess Maximum Day Demand shall exist nor shall any penalty charges be incurred under this Section (9.05) during any period of time in which Shared Reduction in Use is in effect. Penalty charges during a period of time in which a Shared Reduction In Use is in effect shall only accrue and be calculated as set forth in Section 9.06. The penalty schedule for Excess Maximum Day Demand is set forth in subparagraphs (a) and (b) below:

(a) For up to and including three (3) days of Excess Maximum Day Demand per Calendar year: the single largest Excess Maximum Day Demand multiplied by the Average Cost of Maximum Day Capacity multiplied by 40% (0.40).

(b) In the event the number of days of Excess Maximum Day Demand per Calendar year exceeds three (3), the same calculation shall be made as is set forth in Subsection 9.05 (a) above; provided that, the percentage multiplier shall increase 5% (0.05) for each day of Excess Maximum Day Demand per Calendar year beyond three (3); provided further that, in no event shall the percentage multiplier

exceed 100% (1.0). For example, four (4) days of Excess Maximum Day Demand per Calendar year results in a multiplier of 45% (0.45), five (5) such days results in a multiplier of 50% (0.50), and so on, up to a maximum of 100% (1.0).

(c) Nothwithstanding any other provision herein, no penalty charge shall apply for Excess Maximum Day Demand resulting from theft, fire, breakages, leaks, or emergencies; provided that, in any such circumstances the Parties shall use due diligence to address the problem.

(d) The City shall use best efforts to promptly notify the District of each occurrence of Excess Maximum Day Demand. The District shall use best efforts to promptly notify the City of theft, fire, breakages, leaks, or emergencies, that resulted in Excess Maximum Day Demand. The intent of the Parties is to exchange information and coordinate efforts so as to minimize the occurrence of Excess Maximum Day Demand and to promote efficient management of the Water Supply System.

9.06 Alteration of Payment Obligations and Compliance With Reduced Demand.

(a) Delivery of no water. The District's monthly payment obligation under this Agreement shall not exist and the District shall owe no Capital Costs for any period of time in which the City is unwilling or unable to deliver any potable water for any reason, including without limitation, as a result of conditions described in Sections 5.04, 6, or 12.11.

(b) Penalty During Long-Term Supply Shortage. In the event that the delivery of water to the Parties is reduced as a result of a Declaration of Supply Shortage (Long-Term), and either Party fails to attain its proportionately required Shared Reduction in Use (Reduced Demand) for annual quantity, then that Party failing to attain its Reduced Demand for annual quantity shall be subject to a penalty charge. Said penalty charge may be imposed only once per Calendar year, and shall be applied pro rata in any Calendar year in which a Declaration of Supply Shortage (Long-Term) is in effect for less than a full year. In the event either Party's water usage exceeds its Reduced Demand for annual quantity, the total amount of such excess shall be multiplied by the Average Cost of Maximum Day Capacity. The result shall be the penalty charge to be imposed on the Party exceeding its Reduced Demand for annual quantity. No penalty shall exist for a Party exceeding its Reduced Demand for maximum day use.

(c) The penalties authorized in this Section (9.06) shall not apply during a Short-Term Supply Shortage.

(d) Nothwithstanding any other provision herein, no penalty charge shall apply for exceeding the Reduced Demand of either Party resulting from theft, fire, breakages, leaks, or emergencies; provided that, in any such circumstances the Parties shall use due diligence to address the problem.

(e) Each Party shall use best efforts to promptly notify the other Party of breaches in Reduced Demand. Each Party shall use best efforts to promptly notify the other Party of theft, fire, breakages, leaks, or emergencies, that resulted in its exceeding Reduced Demand. The intent of the Parties is to exchange information and coordinate efforts so as to minimize the occurrence of either Party exceeding its Reduced Demand and to promote efficient management of the Water Supply System.

(f) Nothing herein shall be construed to authorize either Party to take more than its authorized share of water when a Shared Reduction in Use requirement is in effect under this Agreement by simply paying the required penalty.

9.07 Comprehensive updates. The parties may undertake a comprehensive update to the functional cost allocation methods underlying the wholesale rate calculation described in the rate study at Exhibit 1, ("comprehensive update"), under the following circumstances:

(a) By mutual agreement of the Parties; or

(b) After mediation or determination of an arbitrator, pursuant to the process and under the criteria set forth in Subsection 9.07 (c) below.

(c) Phase One Mediation/Arbitration.

(1) Process. The Party deciding to initiate a comprehensive update ("initiating Party") shall provide written notice to the other Party ("noninitiating Party") of its desire to complete a comprehensive update. The Parties shall meet in an attempt to resolve any differences within thirty (30) days of the date of the written request for a comprehensive update. After expiration of said thirty (30) day period, if the Parties continue to disagree about the need for a comprehensive update, the initiating Party may provide the noninitiating Party with a written notice for mediation. The Parties shall agree upon appointment of a mediator within thirty (30) days following receipt of the written notice for mediation. In the event the Parties cannot agree upon the identity of a mediator within said thirty (30) days, either Party may apply to any Judge of the Whatcom County Superior Court, sitting in Chambers, and the Judge is hereby authorized to select a mediator. The mediation shall take place within sixty (60) days of the appointment of a mediator. Mediation shall be terminated upon (a) successful resolution of the dispute; (b) written declaration by the mediator of an impasse between the Parties ("impasse"); or (c) following completion of two or more mediation sessions held on separate days, written declaration by one of the Parties of an impasse. The arbitration process may begin only after termination of mediation. To invoke the arbitration process, a written demand for arbitration shall be served by one Party upon the other Party within fourteen (14) days of termination of mediation. Said arbitration shall be conducted substantially in accordance with the procedures established for Mandatory Arbitration under the Rules of the

Superior Court, and without the necessity of filing formal pleadings in Superior Court. Within fourteen (14) days of the date of the written demand for arbitration, each Party shall appoint one qualified arbitrator, and within thirty (30) days following their appointment, the two appointed arbitrators shall together select and appoint a third arbitrator. The three arbitrators so appointed shall comprise the arbitration panel. A hearing before the arbitration panel shall be held within one hundred twenty (120) days of the appointment of the third arbitrator and a decision shall be rendered within fourteen (14) days following the hearing. The decision of the arbitration panel shall be made by majority vote. The burden of proof shall be on the initiating Party. The decision of the arbitration panel shall be final and binding, and there shall be no appeal. The decision of the panel may be enforced in the manner provided in Chapter 7.04 RCW.

(2) Criteria for Requiring Comprehensive Update and Scope. A comprehensive update shall be required if, and only if, there is an unanticipated and substantial change in Capital Costs and/or O&M Costs which the functional cost allocation methods underlying the wholesale rate calculation established in this Agreement are not able to equitably accommodate. In the event the arbitration panel requires a comprehensive update, the panel shall limit the scope of the comprehensive update to that which is necessary to equitably address the substantial change in Capital Costs.

(d) Phase Two Mediation/Arbitration.

(1) Process. Within thirty (30) days of an arbitration panel's award for a comprehensive update in favor of the initiating party, the parties shall meet in an attempt to arrive at a means of resolving their differences, which may include, without limitation, jointly completing a comprehensive update, the results of which may or may not be binding, depending upon further agreement of the parties. If at any point following expiration of thirty (30) days of an arbitration panel's award for a comprehensive update, one party determines that insufficient progress is being made in reaching a final resolution, said party may provide the other party with a written notice for mediation. Said mediation shall be conducted in accordance with the rules and process set forth in Section 9.07 (c)(1) for Phase One mediation. The arbitration process may begin only after termination of mediation as defined in Section 9.07 (c)(1). To invoke the arbitration process, a written demand for arbitration shall be served by one party upon the other party within fourteen (14) days of declaration of the impasse in mediation. Said arbitration shall be conducted in accordance with the rules and process set forth in Section 9.07 (c)(1) for Phase One arbitration.

(2) Criteria for Setting New Functional Cost Allocation Methods. The new functional cost allocation methods established shall be fair and equitable

to both parties, in accordance with the Phase One arbitration decision, and consistent with the spirit, intent and purposes of this Agreement.

(e) Costs of Mediation/Arbitration (Phase One and Phase Two). Each party shall share equally in the fees and expenses associated with mediation and arbitration, including the fees and expenses of the mediator and arbitration panel; provided that, each party shall bear its own costs, including its own attorney fees, witness fees, and costs, associated with mediation and arbitration.

9.08 Stranded Costs. Stranded Costs for which the District must pay shall exist if and only if (a) the City timely requests extension of this Agreement without modification pursuant to Section 11 and the District declines; or (b) neither party timely requests to extend this Agreement pursuant to Section 11. In the event Stranded Costs for which the District must pay exist on the date of termination of this Agreement, the District shall allow the City to recover the District's allocated share of such costs under one of the two methods identified in the below Subsection. The District may in its sole discretion select one of the following two methods prior to the termination of the Agreement:

(a) The District shall reimburse the City for the District's allocated share of Stranded Costs past the termination date of the Agreement in accordance with the depreciation schedule established for each Water Supply System Asset, making annual payments until each such Asset is fully depreciated; or

(b) The District shall reimburse the City for the District's allocated share of Stranded Costs in cash at the termination of this Agreement.

In the event there has not been an extension agreed upon at least ten (10) years before expiration of the original term or a previously extended term of this Agreement, and in the event it appears the District may be obligated to reimburse the City for the District's allocated share of Stranded Costs, the District may, in its discretion, notify the City in writing of a reduction in its Contract Demand for the remaining term of this Agreement. The written notification for reduced Contract Demand shall specify the revised Contract Demand and shall be made no earlier than ten (10) years and no later than nine (9) years before this Agreement expires. In no event shall the revised Contract Demand be for a lesser quantity of water than the highest Estimated Demand for any year up to and including the year in which said written notification of reduced Contract Demand is given.

9.09 Intent on Interfund Operating Transfers. Interfund operating transfers from the City's water utility operating fund to other City departments and funds will be limited to reimbursements for the costs of providing administrative and general services in support of operation and maintenance of the Water Supply System.

9.10 Audit. For a period of three years following the conclusion of any Calendar year, the District shall have the right to audit the City's cost records associated with this Agreement for that Calendar year. The District shall retain the consultant and pay the consultant costs

associated with performance of any such audits and the City shall maintain appropriate accounting records and make them available for inspection by the District's auditors.

ARTICLE 10. PLANNING

10.01 Each Party recognizes its obligation to plan for water supply and distribution in its Water System Plan. Each Party shall adopt a Water System Plan consistent with applicable County plans and ordinances, and State and Federal law. Each Party shall administer its Water System Plan as adopted.

10.02 Each Party shall provide the other with draft copies of its Water System Plan, including amendments, updates, and supplements so that the recipient has an opportunity to review the plan before it is adopted. The purpose and intent of this provision is to ensure that each Party is informed and educated about the other Party's Water System Plan. Nothing herein shall be construed to require either Party to obtain the approval or consent of the other Party for its Water System Plan or to bestow any rights or remedies on the other Party regarding the Water System Plan, not otherwise afforded by State law.

10.03 The Parties shall collect and maintain all water use and water level information necessary for accurate evaluation of Sustainable Yield and to verify that each Party has complied with any Shared Reduction in Use provisions under this Agreement. Each Party shall regularly share all information and records with the other Party that pertain to operation and management of the Water Supply System and the District's system, excluding employee personnel files, the residential addresses and residential telephone numbers of the Parties' retail customers, or attorney-client privileged communications. Said information and records shall include, without limitation, pumping data, static water levels, and any other information about groundwater resources and/or water use. Prior to sharing or releasing any information or records under this Section or pursuant to Section 6, that would otherwise be exempt from public disclosure requirements under Chapter 42.17 RCW, either Party may require the other Party to sign a reasonable confidentiality agreement, substantially in conformance with the example set forth in Exhibit 5. Said confidentiality agreement shall not preclude either Party from using such information or records in a judicial or formal administrative proceeding.

10.04 The Parties acknowledge that the City's Water Rights include inchoate or unperfected rights. The City shall exercise due diligence in developing and perfecting its existing inchoate or unperfected Water Rights. The City shall also maintain Installed Capacity as specified in Section 3.24, and shall timely increase Installed Capacity commensurate with increases in Estimated Demand. The District shall cooperate in these efforts, and in efforts to supply, maintain, and manage the water resource. Neither Party shall engage in any activity that threatens to undermine the Water Rights of the other Party; except that, nothing herein shall prevent either Party from protesting an impairment of one of its existing Water Rights.

10.05 Each Party shall adopt a conservation program as part of their respective Water System Plans. Conservation program efforts shall be communicated and coordinated between the Parties. The Parties recognize the potential for conservation and re-use as sources of future supply, and may by mutual agreement pursue such investments in either Party's service area.

10.06 Each Party retains the responsibility for shortage management within its own service area and retains exclusive authority to make decisions concerning implementation of its shortage management plan, subject to restrictions on water availability during Supply Shortages or general emergencies pursuant to Section 6.

ARTICLE 11. TERM AND TERMINATION

11.01 Unless otherwise agreed in writing between the Parties, this Agreement shall remain in effect for a term of thirty (30) years.

11.02 The Parties may, by mutual agreement, elect to extend this Agreement for an additional term of ten (10) years from the date of the expiration of the initial thirty (30) year term, and may do so for up to a total of three (3) separate and successive ten (10) year extensions. The Parties shall begin discussions regarding any extension twenty (20) years before this Agreement would otherwise terminate. Any extension or successive extension of this Agreement requested or agreed to must be made or entered no later than ten (10) years before this Agreement would otherwise terminate.

ARTICLE 12. ADMINISTRATIVE; OTHER PROVISIONS

12.01 Any dispute arising out of the terms and conditions of this Agreement, except for disputes over comprehensive updates as set forth in Section 9.07, shall be subject to the following mediation process, as a condition precedent to filing any legal cause of action. If a dispute shall arise, a meeting shall be held promptly between the Parties to attempt in good faith to negotiate a resolution to the dispute. For purposes of this Section 12.01, "promptly" shall mean within fourteen (14) calendar days of a Party requesting a meeting to resolve a dispute. If within ten (10) days after such meeting the Parties have not succeeded in resolving the dispute, the dispute shall be mediated. Either Party may provide written notice to the other that the dispute shall be submitted to mediation and a mediator shall be selected. In the event that within seven (7) days of receipt of said written notice the Parties are unable to agree on a mediator, either Party may request appointment of a mediator by any Judge of the Whatcom County Superior Court, sitting in Chambers, and the Judge is hereby authorized to select a mediator. Both Parties shall cooperate to assure that mediation occurs in a timely manner and both Parties shall supply all materials provided to the mediator to the other Party at least two (2) days before mediation. Engaging in mediation shall not effect any claim, right, remedy, or defense of either Party. Should mediation prove unsuccessful, all claims, rights, remedies and defenses of each Party shall be preserved. Mediation shall be terminated upon (a) successful resolution of the dispute; (b) written declaration by the mediator of an impasse between the Parties; or (c) following completion of two or more mediation sessions held on separate days, written declaration by one of the Parties of an impasse. Each Party shall share equally in the fees and expenses associated with mediation, including fees and expenses of the mediator; provided that, each Party shall bear its own costs, including witness fees, and costs, associated with mediation.

12.02 The District shall not allow connection to its water system or certify water availability for any property within the City's Urban Growth Area ("UGA") prior to the owner of said property first executing a no-protest annexation agreement with the City; provided that, this requirement shall not apply to properties included within a District U.L.I.D. All such property

owners requesting connection or certification of water availability from the District shall be referred to the City, and the City shall be solely responsible for obtaining and securing the no-protest annexation agreement from said property owner. The City shall indemnify, defend and hold the District, its officers, agents and employees harmless from all suits, claims or liabilities arising from any such no-protest annexation agreement, regardless of merit or outcome, to the full extent as for negligent acts or omissions as described in Section 12.04 herein.

12.03 Any assumption of jurisdiction by the City over all or part of the District shall only be accomplished by contract with the District pursuant to RCW 35.13A.070. The City hereby knowingly and voluntarily waives its rights under Chapter 35.13A RCW to seek or obtain assumption of jurisdiction of the District for so long as this Agreement is in effect by any means other than entering into a contract with the District as provided in RCW 35.13A.070.

12.04 The City shall indemnify, defend and hold the District, its officers, agents and employees harmless from all suits, claims or liabilities of any nature, including attorney fees, costs and expenses, for or on account of injuries or damages sustained by any person or property resulting from the negligent acts or omissions of and to the extent harm is caused by the City, its agents or employees in connection with the provision of water under this Agreement. If suit in respect to the above is filed and judgment is rendered or settlement made requiring payment of damages by the District, its officers, agents or employees, the City shall pay the same.

12.05 The District shall indemnify, defend and hold the City, its officers, agents and employees harmless from all suits, claims or liabilities of any nature, including attorney fees, costs and expenses, for or on account of injuries or damages sustained by any person or property resulting from the negligent acts or omissions of and to the extent harm is caused by the District, its agents or employees in connection with its use of water under this Agreement. If suit in respect to the above is filed and judgment is rendered or settlement made requiring payment of damages by the City, its officers, agents or employees, the District shall pay the same.

12.06 All notices and other communications required or permitted to be given by this Agreement must be in writing and must be given and will be deemed received if and when either hand delivered, faxed or mailed to:

Birch Bay Water & Sewer District	**City of Blaine**
General Manager	City of Blaine
Birch Bay Water & Sewer District	City Manager
7096 Point Whitehorn Rd.	344 H St.
Birch Bay, WA 98230-9675	Blaine, WA 98230

or to such other address as the Parties hereto may from time-to-time designate in writing and deliver in a like manner. Facsimile transmission of any signed original document and retransmission of any signed facsimile transmission shall be the same as delivery of an original document.

12.07 Failure of either Party at any time to require performance of any provision of this Agreement shall not limit such Party's right to enforce such provision, nor shall any waiver of

any breach of any provision of this Agreement constitute a waiver of any succeeding breach of such provision or a waiver of such provision itself.

12.08 If any term or provision of this Agreement or the application thereof to any person, entity or circumstance shall to any extent be invalid or unenforceable, the remainder of this Agreement and the application of such term or provision to persons, entities or circumstances other than those as to which it is held invalid or unenforceable shall not be affected thereby, and each term or provision of this Agreement shall be valid and enforceable to the fullest extent permitted by law.

12.09 The laws of the State of Washington shall govern any disputes arising under this Agreement.

12.10 Subject to Sections 9.07 and 12.01, any disputes shall be adjudicated in the Superior Court for Whatcom County, Washington, unless otherwise agreed.

12.11 Neither Party shall be liable for any failure to perform any part of this Agreement due to circumstances beyond a Party's reasonable control, including, but not limited to, flood, fire, wind, lightning, quarantine, war, sabotage, act of a public, foreign or domestic enemy, earthquake, civil disturbance, restraint by court order, or restraint by other governmental authority for insufficient or inadequate regulatory approval(s). The Party claiming force majeure under this provision shall provide the other Party such prompt notice of the force majeure condition(s) as is reasonably necessary under the circumstances. The obligations of a Party asserting a force majeure condition(s) under this Agreement shall be suspended to such a degree and for such a period as is reasonable under the circumstances; provided that the Party asserting the force majeure condition(s) works in good faith to remedy the condition(s) with all reasonable dispatch, to the extent it is within its control; and provided further that, any shortage in water availability resulting from said force majeure condition(s) shall be shared by the Parties in equal proportion as required for sharing Short-Term Supply Shortages, described in Section 6.05. The provisions of this Section shall not apply to a drought or other conditions resulting in a decline in the static water levels in the City's wells which withdraw water from those aquifers identified in the City's Water Rights.

12.12 The Parties recognize and acknowledge that damages may be an insufficient or inadequate remedy for a breach of this Agreement. Accordingly, this Agreement shall also be enforceable by and through any other remedy available in law and equity, including specific performance.

12.13 This Agreement may be recorded by either Party and shall be binding upon the successors and assigns of each Party. This Agreement shall run with the Water Supply System, Water Supply System Assets, and the land on which they are located, for so long as this Agreement remains in effect.

12.14 This Agreement constitutes the entire agreement between the City and the District as to the matters contained herein. No oral or written statements made by either Party prior to or following entry of this Agreement shall be considered a part of this Agreement unless expressly

incorporated herein in writing. This Agreement may be modified in writing only, upon mutual agreement of the Parties.

Dated this 2 day of April, 2002.

CITY OF BLAINE

Gary Tomsic, City Manager

Approved as to form:

City Attorney

Attested:

City Clerk

BIRCH BAY WATER & SEWER DISTRICT

Roger Brown, District General Manager

APPROVED as to form:

Attorney for District

Attested:

Patrick Alesse, Secretary-Board of Commissioners

STATE OF WASHINGTON)
) ss.
COUNTY OF WHATCOM)

On this ___ day of _____, 2002, before me personally appeared Roger Brown, to me known to be the General Manager, of the BIRCH BAY WATER & SEWER DISTRICT, and acknowledged that he signed the same as his free and voluntary act and deed, and stated upon oath that he is authorized to execute the foregoing instrument of the said Birch Bay Water & Sewer District for the uses and purposes mentioned in the instrument.

IN WITNESS WHEREOF, I have hereunto set my hand and affixed my seal the day and year first above written.

_____
Print Name:_____
NOTARY PUBLIC in and for the
State of Washington.
My commission expires: _____

STATE OF WASHINGTON)
) ss.
COUNTY OF WHATCOM)

On this 2 day of April, 2002, before me personally appeared Gary Tomsic, to me known to be the City Manager, of the CITY OF BLAINE, and acknowledged that he signed the same as his free and voluntary act and deed, and stated upon oath that he is authorized to execute the foregoing instrument of the CITY OF BLAINE for the uses and purposes mentioned in the instrument.

IN WITNESS WHEREOF, I have hereunto set my hand and affixed my seal the day and year first written above.

Shirley R Thorsteinson

Print Name: _____
NOTARY PUBLIC in and for the
State of Washington.
My commission expires: 9-10-2004

COPY FOR YOUR INFORMATION

FIRST AMENDMENT TO AGREEMENT FOR WHOLESALE WATER SUPPLY

This first amendment ("First Amendment") to the Agreement dated April 2, 2002 ("Agreement") for the wholesale supply of water between the City of Blaine ("City") and the Birch Bay Water & Sewer District ("District") is entered and effective this 27th day of May, 2008.

ARTICLE 1. RECITALS

1.01 On April 2, 2002, the City and the District entered into a long-term contract for wholesale supply of potable water from the City to the District ("Agreement").

1.02 The City and the District have completed or are near completion of their respective Water System Plan updates.

1.03 The City and the District intend to coordinate their efforts in seeking additional water supplies and obtaining necessary water rights.

1.04 The City and the District intend that this First Amendment shall provide general updates to the Agreement and provide more precision and accuracy in defining their respective rights and obligations.

1.05 The foregoing recitals are a material part of this Agreement.

ARTICLE 2. AMENDMENT TO AGREEMENT

The City and the District hereby agree to amend their Agreement dated April 2, 2002 for the wholesale supply of water in accordance with the terms and conditions set forth in this First Amendment. All terms in the Agreement not changed by the terms and conditions set forth in this First Amendment shall remain in full force and effect.

ARTICLE 3. AMENDED TERMS

3.01 The second to the last sentence in Section 3.16 shall be amended as shown in the following underlined format: "It is anticipated that the Estimated Demand components will change from year to year <u>as specified in Section 5.02 herein</u>."

3.02 Section 3.24 shall be amended to add the following sentence as shown in underlined format:

"Installed Capacity." Installed Capacity is expressed in terms of maximum daily production, stated in millions of gallons per day ("mgd"). For 2002, Installed Capacity is 3.19 mgd. <u>For 2008, the updated Installed Capacity is 3.995 mgd.</u>

3.03 The definition of "Joint Assets" in Section 3.25 shall be deleted and replaced with the following:

Those existing and future Water Supply System Assets that serve the City, the District, and other City wholesale customers. Joint Assets shall include without limitation those Water Supply System Assets identified in Exhibit 6.

3.04 A new Section 3.32 shall be inserted in the Agreement and read as follows:

"Regional Capacity Charge" or "RCC." A connection charge imposed on new development in the City and District service areas in proportion to potential water demand. The charge is based on the estimated unit cost of the Joint Assets, including eligible existing and planned future assets.

The original Section 3.32 in the Agreement shall become Section 3.33 and all subsequent sections within Article 3 shall be given new numbers equal to their original number, plus one.

3.05 Section 5.02 shall be amended as shown below to include the underlined language:

The District shall in its discretion forecast its demand for potable water based upon the projected demand set forth in the District's Water System Plan and other relevant information. The District's Estimated Demand for year 2002 is set forth in Exhibit 2. On September 1, 2002, and on September 1 of each and every year thereafter for the duration of this Agreement, the District shall provide written notice to the City of the District's Estimated Demand for the following Calendar year and each of the next four (4) years based upon demand projections in the District's current approved Water System Plan and other relevant information. <u>The first four (4) years of each annual Estimated Demand forecast shall remain unchanged from the same year's forecast in the preceding year's Estimated Demand forecast, unless changes are requested by the District and accepted by the City. Unless otherwise agreed, only for the fifth year of each Estimated Demand forecast (which will always be the only new year appearing on the annual Estimated Demand forecast) may a new water estimate for that year appear. In the event the District fails to provide its revised Estimated Demand forecast on or before September 1 of any year following signature of this First Amendment, the Estimated Demand forecast for the fifth year shall be the same as that of the previous year in the Estimated Demand forecast.</u> In the event that the Estimated Demand exceeds the Contract Demand in any one of those <u>first</u> five (5) years, the District may request that the City increase the Contract Demand pursuant to Section 5.03. Notwithstanding the provisions herein on setting Estimated Demand, in the event that a Declaration of Supply Shortage has been issued for good cause, the District's Estimated Demand shall be reduced in accordance with the Shared Reduction in Use requirements implemented in accordance with Section 6, for so long as said Declaration remains in effect. During a Shared Reduction in Use, Estimated Demand shall be the equivalent of Reduced District Demand.

3.06 A new section 5.05 shall be added to the Agreement and read as follows:

In the event of the City's planned addition to Ultimate Capacity, or similar District installation of an independent water supply source, the District and City shall be mutually obligated to provide a minimum of ninety (90) days prior written notice of planned additions and shall offer the opportunity for equal participation in same. At this time, this section is not intended to apply to development of reclaimed water systems.

(a) For planned City additions to Ultimate Capacity, the City shall make a written offer to the District at least ninety (90) days prior to commencing with the project, for an option to increase Contract Demand by 50%, or any other mutually agreed upon capacity share, of the net increase in Ultimate Capacity. If the District declines, the Contract Demand shall remain unchanged.

(b) For planned District ground-water related improvements intended by the District for dedication to the Water Supply System, and approved by the City, the District shall make a written offer to the City at least ninety (90) days prior to commencing with the project, for an option to limit the increase in Contract Demand by 50%, or any other mutually agreed upon capacity share, of the net increase in Ultimate Capacity. If the City declines, the Contract Demand shall increase the full amount of the net increase in Installed Capacity resulting from the planned District improvements to the Water Supply System.

(c) For planned District improvements intended to result in new District water supply, excluding ground-water supplies, the District shall make a written offer to the City at least ninety (90) days prior to commencing with the project, for an option to purchase a reduction in Contract Demand in an amount equal to 50% of the net increase in water supply capacity resulting from said planned District improvement. If the City declines, the Contract Demand shall remain unchanged. Cost sharing arrangements to reacquire Contract Demand shall be mutually agreed by the Parties at the time.

(d) Written offers made pursuant to any subsection herein shall be accepted by the other party in writing within thirty (30) days of the date on the written offer or said offer shall be deemed declined or rejected.

(e) In the event of any good faith effort by the City or District to develop supply capacity for joint use under this Section 5.05 that fails to result in the addition of planned supply capacity, the party incurring capital costs shall be entitled to recovery of a portion of its capital costs from the other party through the mechanisms defined in Exhibit 1, Sections 1 and 3. This so-called "dry hole" cost recovery mechanism is intended to equitably defray and allocate supply development risk for qualified projects.

3.07 Section 9.02 shall be revised to add the word "and charges" after the word "rates" and before the term "the City" in the first sentence as shown below in underlined form:

No later than November 1 of each and every year for the duration of this Agreement, following receipt of written notice of the District's Estimated Demand as described in Section 5.02 herein, the City shall provide a written rate notice to the District

of the rates and charges the City will charge the District for meeting the District's Estimated Demand during the Calendar year beginning the following January 1.

3.08 The second sentence in Section 9.04 which reads "The rate surcharge shall be equal to 130% multiplied by the Average Wholesale Cost of Water per unit volume" shall be deleted and replaced with the following:

The rate surcharge shall be equal to 160% multiplied by the Average Wholesale Cost of Water per unit volume.

3.09 A new Section 9.055 shall be added and inserted between Sections 9.05 and 9.06 in the Agreement and shall read as follows:

9.055 Regional Capacity Charge. The City shall establish a Regional Capacity Charge, also known as the RCC, reflecting the unit cost of existing and planned facilities in the Joint Assets. The RCC will be applicable to all new development and redevelopment that increases water capacity requirements.

(a) The RCC shall be applicable to all new development at the time of application of City and District connection charges. It shall also be applicable to any redevelopment that increases the corresponding water meter size or estimated water demand.

(b) The methodology for determining the RCC will incorporate the following elements: (i) the original cost of existing Joint Assets, including construction work in process; (ii) up to ten years of accumulated interest on that cost; and (iii) the estimated cost of a ten year Joint Asset capital improvement plan contained in an adopted Water System Plan. The specific methodology will be structured to comply with statutory requirements for both Cities (RCW 35.92) and Districts (RCW 57.08) and may be revised from time to time to conform to any statutory changes. The methodology will consider two alternate methods, and impose the greater charge based on: (i) total system cost divided by total system capacity; or (ii) cost of remaining existing capacity plus added expansion divided by resulting available excess capacity.

(c) The charge will be imposed and collected on each new equivalent residential unit with the City and the District, each defining its own ERU schedules for the purpose of imposing RCCs on their own customers.

(d) Regional Capacity Charges collected by the City and by the District shall be deposited by the parties into water construction funds or accounts restricted to capital purposes and shall not be expended or removed from said funds or accounts except in accordance with subsection (f) herein. For the period through 2014, or completion of the Joint Asset improvements identified in the City's adopted 2008 Water System Plan, whichever occurs first, the District shall annually transfer to the City the RCC's collected in the District and the funds in the City's water construction fund shall be used exclusively in support of said Joint Asset improvements. Subsequently, the District shall have no obligation to transfer its RCC's collected to the City; any use and accounting of funds transferred to and received by the City shall be determined at the annual coordination meeting designated in Section 10.01 by mutual agreement of the

parties. If agreed upon by the District and City, such use may potentially include additional Joint Asset improvements or replacements.

(e) District payments of the Regional Capacity Charge to the City shall be considered an offsetting investment that reduces the net portion of the Joint Assets attributable to the District. The accumulated offset shall be reduced each year at a rate commensurate with the average rate of depreciation of the Water Supply System.

(f) RCC payments from the District are subordinate to other local agency financial obligations, including revenue bonds. City and District RCC receipts are classified as revenues of the respective systems.

3.10 A new Section 9.065 shall be added and inserted between Sections 9.06 and 9.07 in the Agreement and shall read as follows:

District Equity Investments. In the event that the District participates directly in funding improvements to the Joint Assets, or contributes assets to the Joint Assets pursuant to Section 3.06(b) herein, District payments or costs shall be considered an offsetting investment that reduces the net portion of the Joint Assets attributable to the District and shall thereby result in a reduction in rates otherwise owed by the District under the Agreement. The accumulated offset shall be reduced each year at a rate commensurate with the average rate of depreciation of the Joint Assets.

3.11 Section 10.01 shall be amended to add the following provisions as shown in underlined format:

No less than once each calendar year, the City shall schedule a meeting to review the Water Supply System status and invite District management and elected officials to attend; provided that, a quorum of District elected officials shall not be present to cause the meeting to be a public meeting requiring compliance with the Open Meetings Act. The meeting shall address supply capacity and condition, anticipated demands, planned capital activities, unique or revised operating and maintenance activities, conservation coordination, review and discussion of local ERU structures for the purpose of imposing the RCC, determination of collection and application of RCC payments, annual wholesale financial reconciliation issues (including reconciliation and payment of RCCs), regulatory issues, and any other appropriate related topics. Each Party recognizes its obligation to plan for water supply and distribution in its Water System Plan. Each Party shall adopt a Water System Plan consistent with applicable County plans and ordinances, and State and Federal law. Each Party shall administer its Water System Plan as adopted.

3.12 A new Section 11.03 shall be inserted in the Agreement to read as follows:

Upon expiration or termination of this Agreement, the City shall determine the net credit balance reflecting investments by the District under Sections 9.055 and 9.065 herein and shall refund the District said net credit balance within 180 days of expiration or termination. For Joint Assets developed and contributed by the District pursuant to Section 3.06(b) herein, the District shall be entitled to elect to take ownership of the supply in lieu of a refund for the net credit balance; provided that, the District shall fully reimburse the City for the remaining book

value for any appurtenant City-funded improvements that are integrated with and essential to the identified source. The City will cooperate with efforts to obtain approval for any such transfer in supply ownership, but the City makes no representation or warranty that a right to the water supply or portion thereof is transferable under law. This right is not intended to extend to any related assets such as mains that are physically separate from the supply asset and fully funded by the City or essential for continued operation of the City system.

3.13 A new Section 12.15 shall be inserted in the Agreement to read as follows:

The Parties recognize that certain matters are outside the scope of this Agreement including without limitation reclaimed water, cost sharing on the District's PUD's supply project, potential revision to or replacement of the Birch Point surcharge mechanism, and extension of the contract term when advantageous for project financing. Future agreement between the Parties on such matters may be reached and executed by separate agreement or by amendment of this Agreement.

Dated this 27th day of May, 2008.

CITY OF BLAINE

Gary Tomsic, City Manager

Approved as to form:

City Attorney

Attested:

City Clerk

BIRCH BAY WATER & SEWER DISTRICT

Roger Brown, District General Manager

APPROVED as to form:

Attorney for District

Attested:

Don Montfort, Secretary
Board of Commissioners

STATE OF WASHINGTON)
) ss.
COUNTY OF WHATCOM)

On this 27 day of May, 2008, before me personally appeared Gary Tomsic, to me known to be the City Manager, of the CITY OF BLAINE, and acknowledged that he signed the same as his free and voluntary act and deed, and stated upon oath that he is authorized to execute the foregoing instrument of the CITY OF BLAINE for the uses and purposes mentioned in the instrument.

IN WITNESS WHEREOF, I have hereunto set my hand and affixed my seal the day and year first written above.

Cheryl M. Fischer
Print Name: CHERYL M. FISCHER
NOTARY PUBLIC in and for the
State of Washington.
My commission expires: 7-12-2011

STATE OF WASHINGTON)
) ss.
COUNTY OF WHATCOM)

On this 12 day of June, 2008 before me personally appeared Roger Brown, to me known to be the General Manager, of the BIRCH BAY WATER & SEWER DISTRICT, and acknowledged that he signed the same as his free and voluntary act and deed, and stated upon oath that he is authorized to execute the foregoing instrument of the said Birch Bay Water & Sewer District for the uses and purposes mentioned in the instrument.

IN WITNESS WHEREOF, I have hereunto set my hand and affixed my seal the day and year first above written.

Glenn E. Golay
Print Name: Glenn E. Golay
NOTARY PUBLIC in and for the
State of Washington.
My commission expires: 7/18/09

Memorandum of Agreement

Between

The City of Blaine and Birch Bay Water & Sewer District

Regarding

The Establishment of the Permanent 200 Zone Water Intertie and the 300 Zone Water Intertie

This Memorandum of Agreement (MOA) is entered into by the City of Blaine ("City") and Birch Bay Water and Sewer District ("District"). The purpose of the MOA is to set forth the conditions and understandings agreed to by City and District to convert the seasonally-used Bayvue Water Distribution System Intertie into the 200 Zone Water Intertie, and to establish the 300 Zone Water Intertie, each as additional points of delivery of water between City and District. This MOA serves to augment, and does not supersede or amend, the *Agreement for Wholesale Supply of Water* dated April 2, 2002 ("Agreement") between City and District.

Accordingly, City and District agree:

1. To establish a short-term and bi-directional emergency City:District water distribution systems intertie ("the 200 Zone Water Intertie", previously known as the "Bayvue Water Distribution System Intertie"), and to establish a second uni-directional emergency and short-term supply City:District water distribution systems intertie in the same vicinity, but to a different District pressure zone ("the 300 Zone Water Intertie"), between City and District water mains on Semiahmoo Parkway and east of Bayvue Drive, respectively.

2. That the 200 Zone Water Intertie and 300 Zone Water Intertie each constitute an "additional" point of delivery as provided in Agreement Article 6.01.

3. That, although City water that will flow to District via the 200 Zone Water Intertie and 300 Zone Water Intertie will pass through more of City's West Blaine water distribution system than water that flows to District's Birch Point Meter, City will only charge District the Birch Point Surcharge as delineated in Agreement Article 9.04.

4. That District will receive credit for any water that it supplies to City through the 200 Zone Water Intertie at the same rate that City charges District for water per Agreement Article 9.04.

5. That City and District have previously considered an emergency water distribution system intertie in the area described in Item 1 above, as evidenced in City's 1989 *Water System Plan Update* and in District's 2003 and prior *Comprehensive Water System Plans*, and that City and District will describe and include both the 200 Zone Water Intertie and 300 Zone Water Intertie in more detail in their next respective Water System Plan updates.

6. That District will construct (directly or through a developer extension agreement) the 200 Zone Water Intertie and 300 Zone Water Intertie, each including below-grade concrete vaults and appurtenances, pressure control valves, water flow meters, isolation valves, and appurtenances per a City-approved design. The 200 Zone Water Intertie shall include valves and tees situated to allow future installation of permanent or temporary pumping equipment to enable District to deliver water from District to City in an emergency. The installation will include a common electrical equipment enclosure that houses power, communication, and telemetry equipment, and appurtenances for connection to District's telemetry system. Water flow meters shall include "touch read" meter registers and access hatch-mounted sensor pads compatible with existing City

and District meter reading equipment, to enable remote meter reading without the need to enter the vaults.

7. That, prior to delivery of water through either of the interties, District, or the developer constructing the intertie facilities for District, shall by bill of sale transfer ownership of the water flow meters and all 200 and 300 Zone Water Intertie piping and appurtenances on the City side of the water flow meters. City will operate, maintain, and repair, and upgrade and/or replace, water flow meters at District expense per Blaine Municipal Code 13.04.210.

8. That District shall retain ownership of, and shall operate, maintain, and repair, and upgrade and/or replace all the power, communication and telemetry equipment and the 200 and 300 Zone Water Intertie vaults, piping and appurtenances on the District side of the water flow meters.

9. That District has previously provided 200 and 300 Zone Water Intertie construction drawings to City for review and comment, and City has reviewed and approved said drawings.

10. That City shall have right of entry to both the 200 and 300 Zone Water Intertie vaults, without prior notice to District, for operation and maintenance of City's equipment in each vault. Access doors shall be secured with padlocks with keys available to authorized staff of City and District water departments. District shall secure easements from third parties for the benefit of City and District as may be necessary to provide access over private property to the vaults from the public right-of-way.

11. That the 200 Zone Water Intertie is designed to deliver approximately 200 gpm and is capable of higher flow rates, but deliveries from City to District through the 200 Zone Water Intertie are interruptible by City and subject to City's ability to meet City's existing and future West Blaine retail customer demands.

12. That the 200 Zone Water Intertie is capable of flow rates higher than 200 gpm when delivered using a pump from District to City system, but deliveries from District to City through the 200 Zone Intertie are interruptible by District and subject to District's ability to meet District's existing and future retail customer demands.

13. That the 300 Zone Water Intertie is designed to deliver up to approximately 600 gpm and is capable of higher flow rates, but deliveries from City to District through the 300 Zone Water Intertie shall be interruptible by City, except in cases of delivery of water for fire flow conditions in District's 300 Pressure Zone, or in the event District's existing Bayvue Booster Pump is not operating. District shall make reasonable efforts to restore regular operation of the Bayvue Booster Pump.

14. That the intention of City and District is to complete the 200 Zone Water Intertie or 300 Zone Water Intertie by March 30, 2007, or as soon as possible thereafter, subject to Washington State Department of Health approval of the project report and construction drawings for the interties.

15. That this MOA shall expire ten (10) years from the MOA execution date noted below, unless City and District mutually agree by MOA Amendment to revise same, which City and District intend to accomplish through an amendment(s) to the Agreement.

16. That District will, within 30 calendar days following the expiration date, disconnect all District facilities and physically and permanently isolate City water distribution system from District water distribution system.

Executed this 4 day of April, 2007

City of Blaine

Birch Bay Water & Sewer District

State of Washington)
) ss
County of Whatcom)

I certify that I know, or have satisfactory evidence, that Gary R. Tomsic is the person who appeared before me, and that said person acknowledged that he signed this instrument, and on oath stated that he was authorized to execute the instrument as the City Manager of the City of Blaine, and acknowledged it to be the free and voluntary act of such party for the uses and purposes mentioned in the instrument.

4-4-07
Dated

CHERYL M. FISCHER
NOTARY PUBLIC
STATE OF WASHINGTON
COMMISSION EXPIRES
7-12-07

(Seal or Stamp)

Signature
Notary Public in and for the State of Washington

7-12-07
My appointment expires

State of Washington)
) ss
County of Whatcom)

I certify that I know, or have satisfactory evidence, that Roger M. Brown is the person who appeared before me, and that said person acknowledged that he signed this instrument, and on oath stated that he was authorized to execute the instrument as the General Manager of Birch Bay Water and Sewer District, and acknowledged it to be the free and voluntary act of such party for the uses and purposes mentioned in the instrument.

4/13/2007
Dated

DUSTIN SELLINGER
NOTARY PUBLIC
STATE OF WASHINGTON
COMMISSION EXPIRES
APR 6, 2009

(Seal or Stamp)

Signature
Notary Public in and for the State of Washington

4-5-09
My appointment expires

COPY

AGREEMENT
FOR
WHOLESALE SUPPLY OF WATER

Agreement No: 2003.11.07

This Agreement between Bell Bay Jackson Water Association, duly organized and existing under the laws of the State of Washington, hereafter referred to as "Association," and the City of Blaine, a municipal corporation organized and existing under the laws of the State of Washington, hereafter referred to as "City", is effective on January 1, 2004.

ARTICLE 1. RECITALS

1.01 The Association has historically purchased its potable water supply from the City and has put said water to beneficial use.

1.02 The City is willing to sell potable water to the Association under the terms set forth herein.

1.03 The City is interested in promoting fairness and equity among their wholesale water customers.

1.04 The City has determined that it presently has sufficient Water Rights and has provided, or intends to provide, sufficient system capacity to sell potable water to the Association under the terms and conditions set forth herein.

ARTICLE 2. AGREEMENT

The City agrees to sell, and the Association agrees to purchase, a wholesale supply of potable water according to the following terms and conditions. All Exhibits attached hereto are hereby fully incorporated herein as terms of this Agreement.

ARTICLE 3. DEFINITIONS

3.01 "Association Assets." That portion of the Water Supply System Assets that serve only the Association as a wholesale customer. The capital letters "BBJ" are used to designate Association Assets in Exhibit 1.

3.02 "Association Fixed Charge." That portion of the Fixed Charge that Exhibit 1 allocates to the Association each Calendar Year. The units of measurement are dollars per month ("$/yr").

3.03 "Average Cost of Maximum Day Capacity." The Association Fixed Charge divided by the Estimated Maximum Day Demand. The units of measurement are dollars per gallon per day ("$/gpd").

3.04 Average Wholesale Cost of Water." The total wholesale cost of water as calculated pursuant to the rate methodology in Exhibit 1, divided by the Estimated Annual Quantity.

3.05 "AWWA Standards." The most recent edition of the standard for waterworks products and procedures as prepared and published by the American Water Works Association, Denver, Colorado.

3.06 "Calendar Year." The entire twelve month period beginning at 0000 hours on January 1 and ending at 2400 hours on December 31.

3.07 "Capital Costs." The City's costs of capital associated with operating the Water Supply System. Capital Costs are more specifically described in Exhibit 1, and include depreciation and return on rate base. Capital Costs shall not include any fines, penalties, interest, litigation costs, judgments, or settlements caused by the willful or negligent actions of the City, nor any costs for City water conservation programs. Capital Costs may include the costs of future hydrogeologic studies and/or any analysis intended to evaluate Sustainable Yield, which are mutually agreed upon and jointly directed by the Parties. Each Party shall bear its own costs of such studies and analysis which are not mutually agreed upon and jointly directed by the Parties. Capital Costs units of measurement are dollars per year ("$/yr").

3.08 "City Assets." That portion of the Water Supply System Assets that serve only the City and its retail customers. City Assets provide no service to the Association through its Main Wholesale Connection. The capital letter "C" is used to designate City Assets in Exhibit 1.

3.09 "City Meter(s)." City owned meters located at the Main Wholesale Connection, and any other additional or alternate connections hereafter established, which will measure the quantity and flow of water that the City provides to the Association.

3.10 "Contract Annual Quantity." The maximum quantity of potable water that the City shall make available to supply the Association during the course of a Calendar Year. The units of measurement are acre feet per year ("af/yr").

3.11 "Contract Demand." The maximum quantity of potable water that the City shall make available to supply to the Association on a daily and annual basis in any Calendar Year, or portion thereof, during which this Agreement is in effect, subject to any required Shared Reduction in Use. Water is made "available to supply the Association" when it is delivered by the City and withdrawn by the Association at the Main Wholesale Connection, and any additional or alternate connections established pursuant to this Agreement at the required pressure, measured in pounds per square inch gauge ("psig"), set forth herein. Contract Demand shall include two components: Contract Annual Quantity and Contract Maximum Day Demand. The Contract Demand will not change from year to year, unless it is adjusted in accordance with this Agreement.

3.12 "Contract Maximum Day Demand." The maximum quantity of potable water the City shall make available to supply to the Association on any single day (midnight to midnight) in a given Calendar Year during the term of this Agreement, subject to any required Shared Reduction in Use. Contract Maximum Day Demand will remain constant throughout the term of this Agreement, unless Contract Demand is adjusted in accordance with this Agreement. The units of measurement are million gallons per day ("mgd").

3.13 "Customer Function." Those Capital Costs and O&M Costs associated with serving customers of the Water Supply System, as opposed to serving the water demands of the Water Supply System. Common Customer Function costs include the costs of point of service meters and billing.

3.14 "Declaration of Supply Shortage." A written statement from the City to the Association declaring the existence of a Supply Shortage (Short Term or Long Term), the complete factual basis therefore, the new water quantities available to each Party after each Parties' Shared Reduction in Use, and the expected duration that Shared Reduction in Use shall be required.

3.15 "Estimated Annual Quantity." The estimated quantity of potable water that the Association will require from the City during the course of a Calendar Year. Estimated Annual Quantity is a component of Estimated Demand and as a component thereof it is anticipated to change on an annual basis during the term of this Agreement. The units of measurement are acre feet per year ("af/yr").

3.16 "Estimated Demand." The estimated quantity of potable water that the City shall make available to supply the Association each Calendar Year, or portion thereof, during which this Agreement is in effect. Water is made "available to supply the Association" when it is delivered by the City and withdrawn by the Association at the Main Wholesale Connection, and/or any additional, or alternate, connections that are established pursuant to this Agreement at the required pressure, measured in pounds per square inch gauge ("psig"), set forth herein. Estimated Demand shall include two components: Estimated Annual Quantity and Estimated Maximum Day Demand. The Association shall notify the City of its Estimated Annual Quantity and Maximum Day Demand each year in accordance with Article 5.02. It is anticipated that the Estimated Demand components will change from year to year. During a Shared Reduction in Use, Estimated Demand shall be the equivalent of Reduced Association Demand.

3.17 "Estimated Maximum Day Demand." The estimated quantity of potable water that the Association will require from the City on any single day (midnight to midnight) in a given Calendar Year during the term of this Agreement. Estimated Maximum Day Demand is a component of Estimated Demand, and as a component thereof it is anticipated to change on an annual basis during the term of this Agreement. The units of measurement are million gallons per day ("mgd").

3.18 "Excess Annual Quantity." Excess Annual Quantity exists only in those Calendar Years, if any, in which actual water used exceeds the Estimated Annual Quantity for said Calendar Year, as measured by City Meter(s). When it exists, Excess Annual Quantity is the

difference between the Estimated Annual Quantity and the actual quantity of water used in said Calendar Year.

3.19 "Excess Maximum Day Demand." When it exists, Excess Maximum Day Demand is the difference between a single day's actual water demand (midnight to midnight) and Estimated Maximum Day Demand, as measured by City Meters. Excess Maximum Day Demand exists only on those days, if any, in which actual water demand exceeds Estimated Maximum Day Demand.

3.20 "Fire Function." Those Capital Costs and O&M Costs associated with delivering the rate of water flow required to address a fire event within the Water Supply System. Common Fire Function costs include the costs of hydrants, standpipes, storage facilities, and main upsizing to accommodate fire flow.

3.21 "Fixed Charge." The sum of Fixed O&M Costs plus Capital Costs for a Calendar Year. The units of measurement are dollars per year ("$/yr").

3.22 "Fixed O&M Costs." All O&M Costs other than Variable O&M Costs. Fixed O&M Costs are more specifically described in Exhibit 1. The units of measurement are dollars per year ("$/yr").

3.23 "Fixed Rate." Association Fixed Charge divided by twelve (12). The units of measurement are dollars per month ("$/month").

3.24 "General Assets." That portion of the Water Supply System Assets necessary for the operation of the Water Supply System and which are accounted as assets of the City's water utility in the City's accounting system. Examples of General Assets include maintenance trucks, fences, and some planning documents. The capital letter "G" is used to designate General Assets in Exhibit 1.

3.25 "Installed Capacity." Installed Capacity is expressed in terms of maximum daily production. The units of measurement are millions gallons per day ("mgd"). For 2002, the Installed Capacity is 3.19 mgd.

3.26 "Joint Assets." That portion of the Water Supply System Assets that serve the City, and/or the Association, and/or other City wholesale customers. In Exhibit 1, the capital letter and number "J1" designates City and Birch Bay Water and Sewer District Joint Assets; the capital letter and number "J2" designates City and Association Joint Assets; and the capital letter and number "J3" designates City, Birch Bay Water and Sewer District, and Association Joint Assets.

3.27 "Long Term Supply Shortage." A Supply Shortage caused by a significant and meaningful actual decline in Sustainable Yield, determined in accordance with Article 6.

3.28 "Main Wholesale Connection." The wholesale service connection to the Association served by City meters number 48-091-303 and 60-265-458, or their successors at the same location, and such other connections as the Association may require, subject to Article 6.01 for delivery of wholesale water.

3.29 "Operation and Maintenance Costs" or "O&M Costs." The City's costs of operating the Water Supply System, excluding Capital Costs. Such costs include salaries and wages, fringe benefits, power, purchased services, rent, chemicals, other materials and supplies, equipment and interfund operating transfers. O&M costs allocated to the Association shall not include any fines, penalties, interest, litigation costs, judgments, or settlements caused by the willful or negligent actions of the City, nor any costs for City water conservation programs. O&M costs may include the costs of future hydrogeologic studies and/or any analysis intended to evaluate Sustainable Yield, which are mutually agreed upon and jointly directed by the Parties. Each Party shall bear its own costs of such studies and analysis which are not mutually agreed upon and jointly directed by the Parties. O&M Costs are more specifically described in the rate study incorporated herein as Exhibit 1. The units of measurement are dollars per year ("$/yr").

3.30 "Party" or "Parties." The City and/or the Association.

3.31 "RCW." Revised Code of Washington.

3.32 "Reduced Association Demand" (also "Reduced Demand" of Association). The quantity of water from the Water Supply System available for use by the Association on a maximum day and annual quantity basis following Declaration of a Supply Shortage for which good cause exists. In a Long Term Supply Shortage, Reduced Association Demand (RAD) for annual quantity shall equal Contract Annual Quantity (CAQ) times Sustainable Yield (SY) divided by Ultimate Capacity (UC). This is expressed algebraically as RAD = CAQ X SY/UC.

3.33 "Reduced City Demand" (also "Reduced Demand" of City). The quantity of water from the Water Supply System available for use by the City on a maximum day and annual quantity basis following Declaration of a Supply Shortage for which good cause exists. In a Long Term Supply Shortage, Reduced City Demand (RCD) for annual quantity shall equal Sustainable Yield (SY) minus the Reduced Association Demand (RAD) for annual quantity. This is expressed algebraically as RCD = SY – RAD.

3.34 "Regulatory approval(s)." Any and all approvals, authorizations or permits from local, state or federal agencies, including any administrative or judicial appeals/litigation thereon, required to lawfully allow for the purchase, sale and use of potable water as described in this Agreement.

3.35 "Shared Reduction in Use." Contemporaneous reductions in water usage by the City and the Association, in equal proportion, as required by this Agreement due to a Supply Shortage for which good cause exists.

3.36 "Short Term Supply Shortage." A Supply Shortage caused by temporary failure of Water Supply System Assets.

3.37 "Static Water Level." The level at which water stands in a City well as measured in accordance with the following parameters: (a) no water shall be removed through other City wells constructed within the same aquifer containing said City well for a period of fourteen (14) consecutive days immediately prior to the date of measurement; and (b) the water level in said City well shall be measured during the same thirty (30) day period of low seasonal water usage each year of this Agreement. Within five (5) years of the effective date of this Agreement, the

City shall construct two or more observation wells for the sole purpose of monitoring Static Water Level. After construction of said observation wells, Static Water Level shall be determined exclusively from measurements taken from said observation wells.

3.38 "Stranded Costs." Those Capital Costs of the Water Supply System not fully depreciated on the date of termination of this Agreement.

3.39 "Supply Function." All Capital Costs and O&M Costs of the Water Supply System other than Customer Function and Fire Function.

3.40 "Supply Meter." City owned meters located at each well head in the Water Supply System.

3.41 "Supply Shortage." Circumstances under which the City is unable, for good cause, to deliver water to the Association under the terms of this Agreement. The term Supply Shortage shall not apply to causes identified in the force majeure provisions in Article 12.09 or temporary emergencies as described in Article 6.08. A Supply Shortage is either a Short Term Supply Shortage or a Long Term Supply Shortage.

3.42 "Sustainable Yield." The maximum amount of potable water available for use by the Water Supply System without causing significant reductions in Long Term Static Water Levels in the City's wells withdrawing water from those aquifers identified in the City's Water Rights. Sustainable Yield may vary from year to year. A reduction in Static Water Levels shall not be considered Long Term unless those Static Water Levels experience significant reductions during three (3) out of five (5) consecutive years.

3.43 "Ultimate Capacity." The maximum quantity of water as of the date of this Agreement that the Joint Assets would be capable of producing under the City's Water Rights, as set forth in the Report of Examination for the City's Well No 9, assuming that all assets necessary to fully utilize such Water Rights were in place. Ultimate Capacity is expressed as maximum day production and maximum annual quantity. As of the date of this Agreement, Ultimate Capacity for maximum day production is 4.2768 mgd and Ultimate Capacity for maximum annual quantity is 2,560 af/yr.

3.44 "Variable Charge." Variable Rate multiplied by the quantity of water that the City delivers to the Association during a given month. The units of measurement are dollars per month ($/month).

3.45 "Variable O&M Costs." Those O&M Costs which vary directly with the amount of water delivered. Variable O&M Costs consist of power and chemical costs as described in Exhibit 1. The units of measurement are dollars per year ("$/yr").

3.46 "Variable Rate." That portion of the Variable O&M Costs that Exhibit 1 allocates to the Association each Calendar Year divided by the Estimated Annual Quantity. The units of measurement are dollars per hundred cubic feet ("$/ccf").

3.47 "Water Loss Factor." Water Loss Factor ("WLF") means the percentage share of water lost between the point of production and the point of sale to retail and wholesale

customers. The WLF is the average volume of water produced over the prior three Calendar Years by the Water Supply System minus the average volume of water sold over the prior three Calendar Years by the City to its retail and non-Association wholesale customers minus the average volume of water sold over the past three Calendar Years to the Association, divided by the Water Supply System's average volume of water produced over the prior three Calendar Years.

3.48 "Water Rights." Any and all permit applications, claims, permits, or certificates for any quantity of water on file with the State Department of Ecology now or in the future.

3.49 "Water Supply System." The City-owned and operated system that supplies potable water to the Association, City, and other City wholesale customers. The Water Supply System includes all Water Supply System Assets.

3.50 "Water Supply System Assets." Those City owned and operated wells, pumps, transmission mains, water lines, treatment facilities, telemetry, production meters, land, equipment, vehicles, and certain storage reservoirs and planning documents, which are used in supplying potable water to the Association, City and other City wholesale customers. Water Supply System Assets include all City Assets, Association Assets, Joint Assets, and General Assets.

3.51 "Water System Plan." The comprehensive water system plan of the City and/or the Association, including amendments thereto, required by State law and subject to approval by Whatcom County and the State Department of Health.

3.52 "Wholesale Contract Administration." Costs incurred under this Agreement associated with annual rate setting, cost reconciliation, and direct staff support thereof.

ARTICLE 4. SUPPLY AND PURCHASE OF WATER

4.01 The City shall treat and annually supply to the Association the Association's Estimated Demand or such portion as the Association shall actually use.

4.02 The Association shall annually purchase from the City the Association's Estimated Demand, subject to the terms and conditions herein.

4.03 The Association may purchase and use water from the City in an annual or maximum day demand less than its Estimated Demand without penalty and without prejudice to its ability to purchase water in the future.

ARTICLE 5. CONTRACT DEMAND

5.01 Contract Demand components are established as follows:

(a) Contract Annual Quantity shall be 52 acre feet per year ("af/yr").

(b) Contract Maximum Day Demand shall be 0.094 million gallons per day ("mgd").

5.02 The Association shall forecast its demand for potable water based upon the projected demand set forth in the Association's Water System Plan and other relevant information. Between September 1st and 5th of each Calendar Year the Association shall notify the City in writing its Estimated Demand for each of the next five years.

5.03 Either Party may propose to the other at any time during the term of this Agreement, using written communication only, a revision to either, or both, Contract Demand component(s). The Party receiving the proposal may categorically reject it, or that Party may offer a counter proposal with conditions, or that Party may offer a counter proposal without conditions, or that Party may accept it unconditionally. In any event, no Contract Demand component revision shall become effective unless and until both Parties expressly accept same in writing, including any conditions or Agreement revisions that might result.

5.04 The City shall be obligated to supply a quantity of water sufficient to meet the Association's Contract Demand. The Association's Estimated Demand, up to its Contract Demand, effectively renders that quantity of water unavailable to the City in the event it is needed by the Association, unless the Parties agree otherwise. The Parties may, by mutual agreement, amend this Agreement to reduce the Contract Demand on a temporary or permanent basis should it appear to both Parties that such a reduction is necessary to protect the ground water resource. The Association may, in its sole discretion, reduce its Contract Demand under circumstances described in, and in accordance with, Article 9.07.

ARTICLE 6. CONDITIONS OF SERVICE – THE CITY

6.01 The City shall furnish potable water as the Association requires within its Contract Demand, or as the Contract Demand is otherwise adjusted pursuant to this Agreement. The City will furnish this annual quantity of potable water to the Association at a minimum pressure of thirty (30) psig. Delivery by the City and withdrawal by the Association of said potable water shall be at the Main Wholesale Connection and/or at such additional or alternate points of delivery that the Association specifies. Additional or alternate points of delivery shall be subject to the City's prior consent, provided that the City shall not unreasonably withhold such consent. Upon consent, the City shall cooperate with the Association in obtaining any necessary regulatory approval of additional or alternate points of delivery. Flows shall be measured through City Meters and Supply Meters.

6.02 The City shall install, own, and operate all City Meters and all Supply Meters. The City shall calibrate and test City Meters and Supply Meters annually using a certified tester. Association representatives may observe meter calibration and testing activities. The City shall maintain City Meters and Supply Meters to have a registration accuracy within the limits established in AWWA Standards for the corresponding type and size of meter used for City Meters and Supply Meters. The City shall provide to the Association written notice of the date of the annual meter calibration and testing at least ten (10) calendar days before the meter

calibration and testing occurs. The City shall provide the Association a copy of the meter calibration and testing report within thirty (30) days of the City's receipt of the report.

6.03 The City shall provide continuous supply and transmission service to the Association subject to the terms of this Agreement. For its retail water system, the Association is responsible for standby storage in case of the temporary loss of supply component and equalization storage.

6.04 If the City declares a Supply Shortage for which good cause exists, the Association and the City will share, in equal proportion, a reduction in water usage ("Shared Reduction in Use"). Good cause for declaring a Supply Shortage shall require the existence of such facts and circumstances that would lead an objective and reasonable person to conclude that a meaningful Supply Shortage actually exists, and that the requested reduction is necessary to properly manage the Water Supply System. Good cause for a Long Term Supply Shortage shall require, (1) completion of an independent review of all relevant data and studies by a registered hydrogeologist, and (2) said independent review must conclude that there have been significant Long Term reductions in the Sustainable Yields, as defined in Article 3.42.

(a) Before implementing any Shared Reduction in Use, the City must first declare a Supply Shortage to the Association. For a Short Term Supply Shortage, the City may implement a Shared Reduction in Use coincident with its Declaration of Supply shortage. For a Long Term Supply Shortage, the City may implement a Shared Reduction in Use no earlier than ninety (90) days after it declares a Supply Shortage.

(b) Immediately upon declaring a Supply Shortage, the City shall make available to the Association for its review, inspection, and/or copying, all records that are relevant to or may lead to the discovery of information relevant to the question of whether a Supply Shortage exists, including records that would otherwise be confidential or exempt from public disclosure requirements under RCW 42.17; provided that, nothing herein shall require disclosure of any employee personnel files, the residential addresses and residential telephone numbers of the Party's retail customers, or attorney-client privileged communications. In addition, the Parties shall develop and implement procedures to provide for the immediate and continuous, ongoing sharing of such records and information, including without limitations all pumping data, so that the quantity of actual reduction in consumption by each Party on a daily and annual basis may be promptly verified by the other Party on a daily and annual basis may be promptly verified by the other Party. The requirements of this paragraph are in addition to the requirements for routine information sharing in Article 10.03.

6.05 Shared Reduction in Use – Short Term Supply Shortage. For any Short Term Supply Shortage, a Shared Reduction in Use means that the Association shall reduce its Estimated Demand in the same percentage as is required of the City's retail service Customers, based on each Party's most recent three years of historical average day and annual consumption, measured from the date that the City declares a Supply Shortage. The Parties shall endeavor to

develop coordinated approaches to shortage management in their respective Comprehensive Plans and shall work together to develop procedures to implement Short Term Supply Shortage management in accordance with this Article.

6.06 Shared Reduction in Use – Long Term Supply Shortage. For any Long Term Supply Shortage, a Shared Reduction in Use means that the City and the Association shall restrict their respective water usage to the amounts specified herein as Reduced City Demand and Reduced Association Demand, respectively.

6.07 Following a Declaration of Supply Shortage and implementation of Shared Reduction in Use, the Parties shall periodically review and evaluate, no less frequently than annually, whether good cause continues to exist to support the Declaration of Supply Shortage.

(a) If at any time good cause exists to support a Declaration of Supply Shortage more severe than previously issued and a larger Shared Reduction in Use requirement is necessary, a new Declaration of Supply Shortage may be issued and a larger Shared Reduction in Use requirement may be implemented upon compliance with the procedures required in this Agreement for issuance of a Declaration of Supply Shortage in the first instance.

(b) If at any time good cause no longer exists to support the Declaration of Supply Shortage, the Declaration of Supply Shortage and Shared Reduction in Use requirements shall promptly be amended to a lesser Shared Reduction in Use for which good cause exists, or if there is no longer good cause to support any Supply Shortage, the City shall promptly rescind and dissolve the Declaration of Supply Shortage and Shared Reduction in Use.

6.08 The City may temporarily interrupt or reduce delivery of water to the Association if the City, acting in good faith, determines that system emergencies or maintenance and repair so require. Except for emergencies, the City shall give the Association reasonable written notice of the interruption or reduction, the reason therefore, and the likely duration thereof. The City shall make a good faith effort to perform routine maintenance in times when system usage is the lowest. Temporary interruptions or temporary reductions in delivery that exceed 48 hours and do not fall within the provisions of Article 12.09 shall comply with this Agreement governing Supply System Shortages.

6.09 The quality of water supplied to the Association pursuant to this Agreement shall meet or exceed all applicable federal and state rules and regulations governing water quality for Group A Water Systems. The City shall treat the water supplied to the Association to meet or exceed current and future standards required by State adopted limits.

ARTICLE 7. CONDITIONS OF SERVICE - THE ASSOCIATION

7.01 The Association's demand upon the City's water supply shall not exceed the Association's Contract Demand as per Article 5.01, or as adjusted in conformance with this Agreement.

ARTICLE 8. BILLING

8.01 The City shall on a monthly frequency send a dated invoice to the Association. The invoice shall reflect the Fixed Rate, (2) the Variable Charge, and (3) any penalty charges that apply. The invoice is due and payable within thirty (30) days of the invoice date. Delinquent and unpaid balances shall bear interest at the prime rate plus four (4) percent, as published in the Wall Street Journal, compounded annually; except that the Association is not obligated to pay an interest charge on invoices that are being disputed or that are not agreed upon by the Parties.

ARTICLE 9. RATES AND COSTS

9.01 The rates for water supply services to be paid by the District to the City shall be determined in accordance with this Article and the rate methodology set forth in Exhibit 1.

9.02 No later than November 1st of each and every year for the duration of this Agreement, the City shall notify the Association in writing of the Association Fixed Charge and Variable Rate that the City will charge the Association during the Calendar Year beginning the following January.

9.03 Cost Reconciliation. At the time of the annual rate calculation, and no later than the first day of November following the conclusion of each Calendar Year during the term of this contract, the City shall perform the following cost reconciliation procedure: (1) the City shall determine its actual Fixed O&M Costs, Variable O&M Costs, and Capital Costs during the Calendar Year just concluded: (2) the City shall determine the actual amount of water that it delivered to the Association and the total production of the Water Supply System during said just concluded Calendar Year; (3) based on actual results, the City shall re-calculate the Association Fixed Charge, Variable Rate and total revenue that the Association owes the City during the just concluded Calendar Year; (4) an interest charge equal to eighteen (18) months at the weighted cost of capital shall be applied to the amount of overcharge or undercharge; (5) the City shall notify the Association in writing of the results of such cost reconciliation and shall pay or credit the Association for any overcharge, or shall bill the Association for any undercharge during the just concluded Calendar Year. Reconciliation payments or credits shall be made no later than December 31st each Calendar Year. An example and further explanation of the cost reconciliation procedure is set forth in Exhibit 2.

9.04 Penalty Charge. The Association Fixed Charge and the Variable Rate both presume that the City delivers water to the Association at or below the Estimated Maximum Day

Demand. Water quantities that the City delivers to the Association that exceed the Estimated Maximum Day Demand are subject to a penalty charge. The City may impose said penalty charge not more than once per Calendar Year. The penalty charge for Excess Maximum Day Demand is calculated by multiplying the single largest Excess Maximum Day Demand in the Calendar year times the Average Cost of Maximum Day Capacity times a percentage based on the number of days in a Calendar year in which the Estimated Maximum Day Demand is exceeded, as set forth below. No Excess Maximum Day Demand shall exist nor shall any penalty charges be incurred under this paragraph during any period of time in which a Shared Reduction in Use is in effect. Penalty charges during a period of time in which a Shared Reduction In Use is in effect shall only accrue and be calculated as set forth in Article 9.05. The penalty schedule for Excess Maximum Day Demand is set forth in subparagraphs (a) and (b) below:

(a) For up to and including three (3) days of Excess Maximum Day Demand per Calendar Year: The single largest Excess Maximum Day Demand multiplied by the Average Cost of Maximum Day Capacity multiplied by a percentage factor of 40% (0.40).

(b) In the event the number of days of Excess Maximum Day Demand per Calendar Year exceeds three (3): Perform the same calculation as Article 9.04 (a) above; except that the percentage factor shall increase by 5% (0.05) for each day of Excess Maximum Day Demand per Calendar Year beyond three (3) up to a maximum factor of 100% (1.0). For example, four (4) days of Excess Maximum Day Demand per Calendar Year results in a multiplier of 45% (0.45), five (5) such days results in multiplier of 50% (0.50), and so on, up to a maximum of 100% (1.0).

(c) Notwithstanding any other provision herein, no penalty charge shall apply for Excess Maximum Day Demand resulting from theft, fire, breakages, leaks, or emergencies; provided that, in any such circumstances the Parties shall use due diligence to address the problem.

(d) The City shall promptly notify the Association of each occurrence of Excess Maximum Day Demand when it detects same. The Association shall promptly notify the City of theft, fire, breakages, leaks, or emergencies that result in Excess Maximum Day Demand when it detects same. The intent of the Parties is to exchange information and coordinate efforts so as to minimize the occurrence of Excess Maximum Day Demand and to promote efficient management of the Water Supply System.

9.05 Alteration of payment Obligations and Compliance with Reduced Demand.

(a) Delivery of no water. City shall make a prorated reduction in the Fixed Rate for those hours that the City fails to deliver potable water, except under the following circumstances:

(1) City performance of scheduled maintenance not to exceed 4 hours where the Association has been notified at least 72 hours in advance, or
(2) City repairs to conveyance facilities directly incident to the point of service connection on damages caused by others, not to exceed 24 hours, or
(3) City alterations or improvements to conveyance facilities directly incident to the point of service connection coordinated at least 30 days in advance with the Association, not to exceed 24 hours.

The amount of the deduction for any month shall be computed by multiplying the Fixed Rate by the number of whole hours without service and dividing by 730

(b) Penalty during Long Term Supply Shortage. In the event that the delivery of Water to the Parties is reduced as a result of a declaration of a Long Term Supply Shortage, and either Party fails to attain its proportionately required Shared Reduction in Use (Reduced Demand) for annual quantity, then that Party failing to attain its Reduced Demand for annual quantity shall be subject to a penalty charge. Said penalty charge may be imposed only once per Calendar Year, and shall be applied pro rata in any Calendar Year in which a declaration of a Long Term Supply Shortage is in effect for less than a full year. In the event that either Party's water usage exceeds its Reduced Demand for annual quantity, the total amount of such excess shall be multiplied by the Average Cost of Maximum Day Capacity. The result shall be the penalty charge to be imposed on the Party exceeding its Reduced Demand for annual quantity.

(c) The penalties authorized in this Article shall not apply during a Short Term Supply Shortage.

(d) Notwithstanding any other provision herein, no penalty charge shall apply for exceeding the Reduced Demand of either Party resulting from theft, fire, breakages, leaks or emergencies; provided that, in any such circumstances the Parties shall use due diligence to address the problem.

(e) Each Party shall use best efforts to promptly notify the other Party or breaches in Reduced Demand. Each Party shall use best efforts to promptly notify the other Party of theft, fire, breakage's, leaks, or emergencies that resulted in its exceeding Reduced Demand. The intent of the Parties is to exchange information and coordinate efforts so as to minimize the occurrence of either Party exceeding its Reduced Demand and to promote efficient management of the Water Supply System.

(f) Nothing herein shall be construed to authorize either Party to take more than its authorized share of water when a Shared Reduction in use requirement is in effect under this Agreement by simply paying the required penalty.

9.06 Comprehensive updates. The Parties may undertake a comprehensive update to the functional cost allocation methods underlying the wholesale rate calculation described in the rate study at Exhibit 1, ("comprehensive update"), under the following circumstances:

(a) By mutual agreement of the Parties; or

(b) After mediation or determination of an arbitrator, pursuant to the process and under the criteria set forth in Article 9.06 (c) below.

(c) Phase One Mediation/Arbitration:

(1) Process. The Party deciding to initiate a comprehensive update ("Initiating Party") shall provide written notice to the other Party ("Responding Party") of its desire to complete a comprehensive update. The Parties shall meet in an attempt to resolve any differences within thirty (30) days of the date of the written request for a comprehensive update. After expiration of said thirty (30) day period, if the Parties continue to disagree about the need for a comprehensive update, the Initiating Party may provide to the Responding Party a written notice for mediation. The Parties shall agree upon appointment of a mediator within thirty (30) days following receipt of the written notice for mediation. In the event the Parties cannot agree upon the identity of a mediator within said thirty (30) days, either Party may apply to any Judge of the Whatcom County Superior Court, sitting in Chambers, and the judge is hereby authorized to select a mediator. The mediation shall take place within sixty (60) days of the appointment of a mediator. Mediation shall be terminated upon (a) successful resolution of the dispute; (b) written declaration by the mediator of an impasse between the Parties ("impasse"); or (c) following completion of two or more mediation sessions held on separate days, written declaration by one of the Parties of an impasse. The arbitration process may begin only after termination of mediation. To invoke the arbitration process, a written demand for arbitration shall be served by one Party upon the other Party within fourteen (14) days of termination of mediation. Said arbitration shall be conducted substantially in accordance with the procedures established for Mandatory Arbitration under the Rules of the Superior Court, and without the necessity of filing formal pleadings in Superior Court. Within fourteen(14) days of the date of the written demand for arbitration, each Party shall appoint one qualified arbitrator, and within thirty(30) days following their appointment, the two appointed arbitrators shall together select and appoint a third arbitrator. The three arbitrators so appointed shall comprise the arbitration panel. A hearing before the arbitration panel shall be held within one hundred twenty (120) days of the appointment of the third arbitrator and a decision shall be rendered within fourteen (14) days following the hearing. The decision of the arbitration panel shall be final and binding, and there shall be no appeal. The decision of the panel may be enforced in the manner provided in RCW 7.04.

(2) Criteria for Requiring Comprehensive Update and Scope. A comprehensive update shall be required if, and only if, there is an unanticipated and substantial change in Capitol Costs and/or O&M Costs which the functional cost allocation methods underlying the wholesale rate calculation established in this Agreement are not able to equitably accommodate. In the event the arbitration panel requires a comprehensive update, the panel shall limit the scope of the comprehensive update to that which is necessary to equitable address the substantial change in Capital Costs.

(d) Phase Two Mediation/Arbitration:

(1) Process. Within thirty (30) days of an arbitration panel's award for a comprehensive update in favor of the Initiating Party, the Parties shall meet in an attempt to arrive at a means of resolving their differences, which may include, without limitation, jointly completing a comprehensive update, the results of which may or may not be binding, depending upon further agreement of the Parties. If at any point following expiration of thirty (30) days of an arbitration panel's award for a comprehensive update, one Party determines that insufficient progress is being made in reaching a final resolution, said Party may provide the other Party with a written notice for mediation. Said mediation shall be conducted in accordance with the rules and process set forth in Article 9.06 (c) (1) for Phase One mediation. The arbitration process may begin only after termination of mediation as defined in Article 9.06 (c) (1). To invoke the arbitration process, a written demand for arbitration shall be served by one Party upon the other Party within fourteen (14) days of declaration of the impasse in mediation. Said arbitration shall be conducted in accordance with the rules and process set forth in Article 9.06 (c) (1) for Phase One arbitration.

(2) Criteria for Setting New Functional Cost Allocation Methods. The new functional cost allocation methods established shall be fair and equitable to both Parties, in accordance with the Phase One arbitration decision, and consistent with the spirit, intent and purposes of this Agreement.

(e) Costs of Mediation/Arbitration (Phase One and Phase Two). Each Party shall share equally in the fees and expenses associated with mediation and arbitration, including the fees and expenses of the mediator and arbitration panel; provided, that each Party shall bear its own costs, including its own attorney fees, witness fees, and costs, associated with mediation and arbitration.

9.07 Stranded Costs. Stranded Costs for which the Association must pay shall exist if and only if (a) the City timely requests extension of this Agreement without modification pursuant to Article 11 and the Association declines; or (b) neither Party timely requests to extend this Agreement pursuant to Article 11. In the event Stranded Costs for which the Association must pay exist on the date of termination of this Agreement, the Association shall allow the City

to cover the Association's allocated share of such costs under one of the two methods identified below. The Association may in its sole discretion select one of the following two methods prior to the termination of the Agreement.

(a) The Association shall reimburse the City for the Association's allocated Share of Stranded Costs past the termination date of the Agreement in accordance with the depreciation schedule established for each Water Supply System Asset, making annual payments until each such Asset is fully depreciated; or

(b) The Association shall reimburse the City for the Association's allocated share of Stranded Costs in cash at the termination of this Agreement. In the event there has not been an extension agreed upon at least ten (10) years before expiration of the original term or a previously extended term of this Agreement, and in the event it appears the Association may be obligated to reimburse the City for the Association's allocated share of Stranded Costs, the Association may, in its discretion, notify the City in writing of a reduction in its Contract Demand for the remaining term of this Agreement. The written notification for reduced Contract Demand shall specify the revised Contract Demand and shall be made no earlier than ten (10) years and no later than nine (9) years before this Agreement expires. In no event shall the revised Contract Demand be for a lesser quantity of water than the highest Estimated Demand for any year up to and including the year in which said written notification of reduced Contract Demand is given.

9.08 Intent on Interfund Operating Transfers. Interfund operating transfers from the City's water utility operating fund to other City departments and funds will be limited to reimbursements for the costs of providing administrative and general services in support of operation and maintenance of the Water Supply System.

9.09 Audit. For a period of three (3) years following the conclusion of any Calendar Year, the Association shall have the right to audit the City's cost records associated with this Agreement for that Calendar Year. The Association shall retain the consultant and shall pay its consultant's costs associated with the performance of any such audits. The City shall maintain appropriate accounting records and make them available for inspection by the Association's auditors.

ARTICLE 10. PLANNING

10.01 Each Party recognizes its obligation to plan for water supply and distribution in its respective Water System Plan. The Association shall adopt a Water System Plan consistent with applicable County plans and ordinances, and State and Federal law.

10.02 Each Party shall provide the other with draft copies of its Water System Plan, including amendments, updates, and supplements so that the recipient has an opportunity to review the plan before it is adopted. Nothing herein shall be construed to require either Party to

obtain the approval of the other Party for its Water System Plan, or to bestow any rights or remedies on the other Party regarding the Water System Plan, not otherwise afforded by State Law.

10.03 The Parties shall collect and maintain all water use and water level information necessary for accurate evaluation of Sustainable Yield and to verify that each Party has complied with any Shared Reduction in Use provisions under this Agreement. Each Party shall regularly share all information and records with the other Party that pertain to operation and management of the Water Supply System and the Association's system, excluding employee personnel files, the residential addresses and residential telephone numbers of the Parties' retail customers, or attorney-client privileged communications. Said information and records shall include, without limitation, pumping data, static water levels, and any other information about ground water resources and/or water use. Prior to sharing or releasing any information or records under this Article or pursuant to Article 6, that would otherwise be exempt from public disclosure requirements under RCW 42.17, either Party may require the other Party to sign a reasonable confidentiality agreement. Said confidentiality agreement shall not preclude either Party from using such information or records in a judicial or formal administrative proceeding.

10.04 The Association shall adopt a conservation program as part of its Water System Plan. Conservation program efforts shall be communicated and coordinated between the Parties.

ARTICLE 11. TERM AND TERMINATION

11.01 Unless otherwise agreed in writing between the Association and the City, this Agreement shall remain in effect for a term of twenty (20) years.

11.02 The Parties may, by mutual agreement, elect to extend this Agreement for an additional term of ten (10) years from the date of the expiration of the initial twenty (20) year term, and may do so for up to a total of three (3) separate and successive ten (10) year extensions. The Parties shall begin discussions regarding any extension five (5) years before the Agreement would otherwise terminate. Any extension or successive extensions of this Agreement requested or agreed to must be made or entered no later than one (1) year before this Agreement would otherwise terminate.

ARTICLE 12. ADMINISTRATIVE AND OTHER PROVISIONS

12.01 Any dispute arising out of the terms and conditions of this Agreement, except for disputes over comprehensive updates as set forth in Article 9.06, shall be subject to the following mediation process, as a condition precedent to filing any legal cause of action. If a dispute shall arise, a meeting the Parties shall promptly meet to attempt in good faith to negotiate a resolution to the dispute. For the purposes of this paragraph, "promptly" shall mean within fourteen (14) calendar days of a Party requesting a meeting to resolve a dispute. If within ten (10) days after such meeting the Parties have not succeeded in resolving the dispute, the dispute shall be mediated. Either Party may provide written notice to the other that the dispute shall proceed to

mediation and a mediator shall be selected. In the event that within seven (7) days of receipt of said written notice the Parties are unable to agree on a mediator, either Party may request appointment of a mediator by any Judge of the Whatcom County Superior Court, sitting in Chambers, and the Judge is hereby authorized to select a mediator. Both Parties shall cooperate to assure that mediation occurs in a timely manner and both Parties shall supply all materials provided to the mediator to the other Party at least two (2) days before mediation. Engaging in mediation shall not affect any claim, right, remedy, or defense of either Party. Should mediation prove unsuccessful, all claims, tights, remedies and defense of each Party shall be preserved. Mediation shall be terminated upon (a) successful resolution of the dispute; (b) written declaration by the mediator of an impasse between the Parties; or (c) following completion of two or more mediation sessions held on separate days, written declaration by one of the Parties of an impasse. Each Party shall share equally in the fees and expensed associated with mediation, including fees and expenses of the mediator; provided that, each Party shall bear its own costs, including witness fees, and costs, associated with mediation.

12.02 The Association shall not allow connection to its water system or certify water availability for any Property within the City's Urban Growth Area ("UGA") without first receiving a letter of consent from the City.

12.03 The City shall indemnify, defend and hold the Association, its officers, agents and employees harmless from all suits, claims or liabilities of any nature, including attorney fees, costs and expenses, for or on account of injuries or damages sustained by any person or property resulting from the negligent acts or omissions of and to the extent harm is caused by the City, its agents or employees in connection with the provision of water under this Agreement. If suit in respect to the above is filed and judgment is rendered or settlement made requiring payment of damages by the Association, its officers, agents or employees, the City shall pay the same.

12.04 The Association shall indemnify, defend and hold the City, its officers, agents and employees harmless from all suits, claims or liabilities of any nature, including attorney fees, costs and expenses, for or on account of injuries or damages sustained by any person or property resulting from the negligent acts or omissions of and to the extent harm is caused by the Association, its agent or employees in connection with its use of water under this Agreement. If suit in respect to the above is filed and judgment is rendered or settlement made requiring payment of damages by the City, its officers, agents or employees, the Association shall pay the same.

12.05 All notices and other communications required or permitted to be given by this Agreement must be in writing and must be given and will be deemed received if and when either hand delivered, faxed or mailed to:

BELL BAY JACKSON WATER ASSOCIATION
Secretary/Treasurer
7232 West 40th Drive
Ferndale, WA 98248

CITY OF BLAINE
City Manager
344 H Street
Blaine, WA 98230

Or to such other address as the Parties hereto may from time-to-time designate in writing and deliver in a like manner. Facsimile transmission of any signed original document and retransmission of any signed facsimile transmissions shall be the same as delivery of an original document.

12.06 If any term or provision of this Agreement or the application thereof to any person, entity or circumstance shall to any extent be invalid or unenforceable, the remainder of this Agreement and the application of such term or provision to persons, entities or circumstances other than those as to which it is held invalid or unenforceable shall not be affected thereby, and each term or provision of this Agreement shall be valid and enforceable to the fullest extent permitted by law.

12.07 The laws of the State of Washington shall govern any disputes arising under this Agreement.

12.08 Subject to Article 9.06 and Article 12.01, any disputes shall be adjusted in the Superior Court for Whatcom County, Washington, unless otherwise agreed.

12.09 Neither Party shall be liable for any failure to perform any part of this Agreement due to circumstances beyond a Party's reasonable control, including, but not limited to, flood, fire, wind, lightening, quarantine, war, sabotage, act of a public, foreign or domestic enemy, earthquake, civil disturbance, restraint by court order, or restraint by other governmental authority for insufficient or inadequate Regulatory Approval(s). The Party claiming force majeure under this provision shall provide the other Party such prompt notice of the force majeure condition(s) as is reasonably necessary under the circumstances. The obligations of a Party asserting a force majeure condition(s) under this Agreement shall be suspended to such a degree and for such a period as is reasonable under the circumstances; provided that the Party asserting the force majeure condition(s) works in good faith to remedy the condition(s) with all reasonable dispatch, to the extent it is within its control; and provided further that, any shared by the Parties in equal proportion as required for sharing Short Term Supply Shortages, described equal proportion as required for sharing Short Term Supply Shortages, described in Article 6.05. The provisions of this Article shall not apply to a drought or other conditions resulting in a decline in the Static Water Levels in the City's wells which withdraw water from those aquifers identified in the City's Water Rights.

12.10 This Agreement may be recorded by either Party.

12.11 This Agreement constitutes the entire agreement between the City and the Association as to the matters contained herein. No oral or written statement made by either Party prior to or allowing entry of this Agreement shall be considered a part of the Agreement unless expressly incorporated herein in writing. This Agreement may be modified in writing only, upon mutual agreement of the Parties.

12.12 The Parties recognize and acknowledge that damages may be an insufficient or inadequate remedy for a breach of this Agreement. Accordingly, this Agreement shall also be

enforceable by and through any other remedy available in law and equity, including specific performance.

Dated this 7th day of November 2003

CITY OF BLAINE

BELL BAY JACKSON WATER ASSOCIATION

Approved as to form by:

Jon Sitkin
City Attorney

Executed by:

Gary Tomsic
City Manager

Merwyn Bay
President

Attested by:

Shirley Thorsteinson
City Clerk

JoAnn VanZanten
Secretary/Treasurer

INTERLOCAL AGREEMENT

Whereas, the City of Blaine, a municipal corporation of the State of Washington, hereinafter referred to as City, has the authority to enter into this agreement, and

Whereas, the Sweet Road Water Association, a private water association operating under the laws of the State of Washington, hereinafter referred to as Association, has the authority to enter into this agreement, and

Whereas, the City and the Association have entered into several agreements and amendments, since July 12, 1971, whereby the City through the Association did provide water to members of the Association, and

Whereas, the agreements have always stipulated that, at the time of the final payment of the loan secured by the Association from the Farmer's Home Administration, paid over the years in a ratio of 49.2% by the Association and 50.8% by the City, whether paid off at the end of, or earlier than, the prescribed 40 year term, then the City would assume ownership of all installed water mains from the Association for the payment of $1.00 to the Association by the City, and

Whereas, the City and Association recognize that the cost to the City is greater to provide full water utility service to customers living outside the City limits than to customers living inside the City limits, and

Whereas, the City and the Association desire to execute an early pay off of the Farmer's Home Administration loan, and transfer ownership, comprehensive planning, and maintenance support responsibility to the City,

Now Therefore, the parties agree as follows,

The City agrees to pay the Association the sum of approximately $22,759.84, the City's share of the remaining balance on the Farmer's Home Administration loan, and

The City agrees to pay the Association $1.00 as payment for ownership of all water mains, and

The City agrees to provide all services to Association members the same as the City provides to all other water utility customers of the City living outside of the City limits, including Water Comprehensive Planning as required by the State of Washington and Whatcom County Coordinated Water System Plan, and

The City agrees to provide service to approximately 25 customers, at current published charges, who have been waiting at this time for confirmation of water availability prior to securing a building permit from Whatcom County, and

The City agrees to notify the State and the Whatcom Water Utility Coordinating Committee that the City will be assuming sole responsibility for water service in the area served by the Association, and

The Association agrees to submit the City's portion of the loan pay off, along with the Association's portion of the loan pay off, to the Farmer's Home Administration, and

The Association agrees to accept payment of $1.00 as just compensation for the water mains and transfer ownership of said water mains, along with related easements, to the City. and

The Association understands, that at this time, the monthly fee paid to the City by customers living outside the City limits for water consumption is 1.5, one and a half, times the rate paid by customers within the City limits.

The Association agrees that its members shall become water utility customers of the City the same as all other water utility customers of the City living outside of the City limits, including payment of service connection fees and water rates as adopted from time to time by the City, and

The Association agrees that future hookups will be made by the City in conformance with regulations imposed upon the City by the State and the Whatcom County Comprehensive Water System Plan and as amended in the future, and

The Association agrees to notify the State and the Whatcom County Water Utility Coordinating Committee that the City will be providing water service to the area served by the Association and that the Association ceases to exist.

The City and Association agree that the City will assume loans held by the Association to its Behme Road Customers in the amount of approximately $2,677.44 each, the City paying the Association $1,000.00 each, said customers agreeing to sign a promissory note to the City thereby transferring their loan to the City.

Executed this 16 day of November, 1992.

For the Association: For the City:

Joe Silvia
President

Patrick T. Floyd
City Manager

Nadine MacArthur
Secretary

David Brand
City Clerk
for:

CITY OF BLAINE SEAL OF CLERK WHATCOM COUNTY STATE OF WASHINGTON

docid: SWRD2101

Approved as to form:

City Attorney

Vol: 290 Page: 738
File No: 9212060124

CITY OF BLAINE

CITY COUNCIL MINUTES

November 9, 1992

CALL TO ORDER

Mayor Gloria Hagen convened the regular meeting of the Blaine City Council to order at 7:04 p.m.

Pledge of Allegiance

ROLL CALL

Councilmembers Present: Mayor Gloria Hagen; Tom Burton; Georgia Gardner; Janet Hansen; Jeanne Nelson; Alma Wagner; and David White.

Staff Present: Matt Elich; Patrick Floyd; Donna Hanson; Butch Hinchey; Shirley Thorsteinson; Tory Tjersland.

AUDIENCE COMMENTS -- COMMUNICATIONS

Richard Sturgill, Acting Transit Planner, 1218 - 12th St., Blaine, Wa.

Mr. Sturgill announced to Council that the bicycle path along Marine Drive was granted its funding through COG. A copy of a letter that was written to Whatcom County Council was given to Council for their approval; this letter requested funds for the bicycle paths and walking trails along Drayton Harbor which is in the county.

Robert Griffith, Whatcom County Council of Governments

He spoke about other projects submitted to DOT for transportation enhancements. Approximately $100,000 will be sent to the City and the City is obligated for matching funds of 20% for the bicycle paths. A Birch Bay trail was also funded which will tie in nicely with the future bikeway plans.

Council approved Richard's letter to be sent to the Whatcom County Council.

Mayor Hagen introduced new persons in the audience:

Don Wick, 9138 Gleneagle Drive - Mr. Wick was here to inquire about the necessity of requiring installation of automatic fire sprinklers. He was told that this would be discussed at the public hearing on November 23rd.

Dan Wick, 9141 Gleneagle Drive

Steve McClure, Blaine Banner

CONSENT AGENDA

Councilmember Burton requested to pull Item No. 4 from the Consent Agenda.

Councilmember Gardner requested to pull Warrant No. 3304.

MOTION BY HAGEN, SECOND BY NELSON TO ACCEPT CONSENT AGENDA WITH THE EXCEPTION OF ITEM 4, APPROVAL OF PUBLIC HEARING FOR NOVEMBER 23RD RE: EAST BLAINE ANNEXATION AND REZONE AND WARRANT NO. 3304.

Approval of Bills - Warrant Nos. 3213 - 3340, amount: $239,801.65, less $530.78.

Approval of Payroll - Warrant No. 1666 - 1829, amount: $255,676.97.

Approval of Council Minutes for October 26, 1992.

Approval to set public hearing for November 23rd requiring installation of automatic fire sprinklers in all new construction and remodels exceeding 4999 square feet.

Approval of Agreement for Probation Services.

Approval to accept minutes of Special City Council meeting of November 2, 1992.

MOTION PASSED.

Councilmember Burton referred to his objections to the proposed public hearing for the East Blaine Annexation and Rezone on November 23 and read to the Council the RCW's, Objectives of the Boundary Review Board under 36-93-180 and to show how many of the ten guidelines that the RCW's give that this annexation will meet, as follows:

1. Preservation of natural neighborhoods and communities; -- well, it's obvious it doesn't do that.

2. Use of physical boundaries, including but not limited to bodies of water, highways and land contours -- it does not do that.

3. Creation and preservation of logical service areas - well, it's in our service area so you just can't really argue with that one.

4. Prevention of abnormally irregular boundaries; and this is the one that the Boundary Review Board has called us on before and it certainly doesn't meet that criteria.

5. Discouragement of multiple incorporations of small cities and encouragement of incorporation of cities in excess of ten thousand population in heavily populated urban areas; that rule doesn't apply.

6. Dissolution of inactive special purpose districts - really doesn't apply.

7. Adjustment of impractical boundaries; well it doesn't meet that criteria because it does set up an irregular or impractical boundary.

8. Incorporation as cities or towns or annexation to cities or towns of unincorporated areas which are urban in character; this is certainly not that --- it is an extremely rural area, so that will not apply.

9. Protection of agricultural and rural lands which are designated for long term productive agricultural and resource use by a comprehensive plan adopted by the county legislative authority -- and that item we all know that that land out there in the East Blaine Annexation is rural and is zoned rural and has been zoned rural and got even more stringent controls than in 1986. So this parcel is not going to meet six of the nine objectives of the Boundary Review Board. Why are we even considering this? Hopefully, we need to short-circuit this thing right now, be willing to serve utilities out in that area which would be for the long term benefit of both that proposal and ourselves and not be so greedy and so eager to incorporate more and more areas within the City of Blaine which is a loss for us. So I don't think that we really need to go through with this public hearing; we know that it's not going to pass and we know we can do better if we just will be willing to serve our utilities to these areas and not attempt to continuing to incorporate them in the city boundaries.

MOTION BY BURTON, SECOND BY GARDNER NOT TO ALLOW PUBLIC HEARING FOR NOVEMBER 23RD FOR THE EAST BLAINE ANNEXATION AND REZONE.

Mayor Hagen asked Attorney Elich if a public hearing has to take place. Mr. Elich responded by stating that the law requires that once an application has been submitted and given prior approval a public hearing is mandatory.

Mr. Elich also requested that whatever was stated here tonight be made part of the public hearing for review.

MOTION BY BURTON AND SECOND BY GARDNER WITHDRAWN.

Councilmember Gardner referred to Warrant No. 3304 and objects to it being coded under "Professional Services" rather than "Meals".

Patrick Floyd stated that this was an error and will be corrected.

MOTION BY GARDNER, SECOND BY HANSEN THAT APPROVAL BE GIVEN TO PAYMENT OF WARRANT NO. 3304 IN THE AMOUNT OF $530.78 WITH ITS PROPER CODING. MOTION PASSED.

MOTION BY WAGNER, SECOND BY HANSEN TO SET PUBLIC HEARING OF EAST BLAINE ANNEXATION ON NOVEMBER 23RD. MOTION PASSED.

PUBLIC HEARINGS

A Public Hearing sign-up sheet was made available to the public indicating their pro or con preference and indicating whether they wished to speak.

Proposed Amendment of Parking Regulations at Section 17.58.210 to increase the maximum allowable amount of parking for compact cars.

Staff recommendation is to amend the regulations at Section 17.58.210 to allow a ratio of one to two for compact parking spaces for residential uses. This is consistent with observed local demands. Maintain current minimum dimensions for parking spaces. The amount of property saved by reducing the spaces to the smaller standards used elsewhere would be significant only in every large developments.

THE PUBLIC HEARING IS DECLARED OPEN.

There was no one wishing to speak on this topic.

The Public Hearing is declared closed.

1993 Budget

THE PUBLIC HEARING IS DECLARED OPEN.

There was no one wishing to speak on this topic.

Budget Hearing is continued to November 23, 1992.

REPORTS OF ADVISORY COMMITTEES

Airport Commission -- Don Nelson

Don Nelson: Thank you. Once again the Commission hasn't met since your last couple of meetings. However, they will meet this Thursday at 8:00 a.m. here in the morning. I am please to report that with absentee ballots counted today the present position of

the vote on the abolishment of the airport is failing at 46% for abolishment and 54% against. Of the absentees counted today they went in favor of keeping the airport at 62% to 38%. There are still some out there; they'll count the final ones on the 17th. However, I would presume there won't be too many back and I hardly can see how they could change it although I guess numerically it's possible.

Mayor Hagen: Mr. Nelson, how many were counted today?.

Don Nelson: I believe there were 63 counted today. I had heard there were 153 out but it seems kind of incredible that only 63 of 153 have come back by now, but maybe that's possible. There's an 80-vote spread now and I guess there could be 90 ballots out yet, but doesn't seem like it could change it now. So, I'm ready to declare the airport the winner.

Don Nelson: I am concerned about the committee to abolish the airport, the final mailer that they sent out. There is a lot of misleading statements in this mailer that it would seem must have come, information must have come out of City Hall here somewhere. Now whether that's staff or Council or just somebody misinterpreting what they read -- I don't know. But they talk about one thing about the people getting airport hands out of their pockets and they say that they are, the people are paying for Airport Manager's salary and insurance and maintenance and electricity and interest on airport debt. And they include paying for the Bellingham Airport. Well of that list the only one that's true, to my knowledge, is that, yes, we are paying for the Bellingham Airport with taxes. But airport income pays for all of those other things. They also stated that money collected by the Airport from all sources has not covered expenses this year. Now they have had to research here somehow to get that information. I would hope they just didn't pick it out of the air and make a statement like that. But according to the new printout that I have airport revenue this year so far exceeds expenses by $10,000 and a month ago it was by $9,000 and that's increased another $1,000 this month. So I guess that's a $1,000 a month; of course, we may spend that money yet before the year's over but so far this year we're well exceeding expenditures with revenues.

Mayor Hagen: I guess we appreciate that, Mr. Nelson, but I don't really don't know that the Council --------

Don Nelson: Well, I'm going to get to the point on that and they've also made promises, or made statements in this thing, that the airport is not providing shuttle services to the San Juans, not providing air freight, not providing charter service, and so on. These things are all totally untrue. We are providing those services out of this airport. And then finally they say, don't be mislead, abolish the airport. What I'm getting at is that it seems to me that this is somehow or other unfair campaigning and I would like to ask that the City Attorney

look into whether or not this is legal -- whether they can make mistakes. Maybe it's moot since we've won but what if the vote had gone against us, would this be the basis for a challenge of the vote?

Mayor Hagen: I don't know, maybe Mr. Elich could look into that.

Don Nelson: I would appreciate it. We already have the attorney looking into the matter with the Attorney General, you know, whether or not those funds have to be paid if the airport is closed. I think that's still information that should come out and I would like to see that pursued.

Mayor Hagen: What kind of coverage was this mailer? Do we know? Did it go to all, everybody in Blaine or do we know? Was it actually mailed?

Don Nelson: It was mailed. This is one that my son received. I did not receive one.

Mayor Hagen: I guess I would say that if this is general information that's out and if it's false I would like to see maybe in the newsletter something, some kind of correction. I don't think we want people to believe something that isn't so. If it's something that's open to interpretation then I think we'll just have to let everybody interpret as they choose. But if there is false statements in there, then I think they need to correct it.

Councilmember Wagner: I don't know, but I think they used the voter's list and I think they left out people like Don Nelson and myself because they know where we stood. But my son got one.

Councilmember Gardner: I didn't get one, I feel left out.

Mayor Hagen: I didn't either, maybe none of the Council members got one.

Councilmember Wagner: I see their idea of taking that and a rebuttal in the newsletter might have some value because I do hate to see lies continued.

Mayor Hagen: I think if it is interpretation, then I think that that's something everybody chooses to interpret themselves. But if there are actual false statements then I would .....

Don Nelson: It is mailed under the heading, it says: "Paid for by Citizens to Abolish the Blaine Airport" so I assume it was that committee. Lastly I.....

Mayor Hagen: Mr. Nelson, Ms. Gardner had a comment she wanted to make, a question?

Councilmember Gardner; I think that the voters have spoken and that they want to retain the airport and I think that what we ought to do is to act positively. I think that for this Council or for anybody to decide to sort through campaign propaganda and analyze what is accurate and what is not is not only a hopeless task it's probably a waste of time. So instead of putting our energies to that, why don't we put our energies to building up the airport?

Don Nelson; I appreciate that statement. Thank you.

Councilmember Gardner: Why don't we just ignore it, all sides of it.

Councilmember Burton: I want to investigate everybody's claim

Councilmember Gardner: Oh Lord, I wouldn't have the energy.

Councilmember Burton: There is no need to get in the middle of any of it.

Don Nelson: Finally, I would like to report a matter that is coming up. We have a local citizen that is, that has sent quite a pack of information I guess to Washington, D.C. and it includes articles from the Blaine Banner and advertisements. One advertisement that was mentioned was the drawing by, again, by the citizens to abolish the Blaine Airport. It was the drawing of an airliner sticking out of the roof of our school buildings on fire. And I'm not sure what the point of that is but apparently this person, and also to continue what was in the packet. There were photographs of what the FAA officials reported to me appear to be dots in the sky but alleging low flying aircraft over Blaine. There was also a photograph of an airplane, several photographs of an airplane sitting on the ground at the Blaine airport. There was a float plane that didn't have any "N" numbers on it. Here we go again with the "N" numbers issue. There is absolutely nothing wrong with an airplane sitting on the ground on the airport with no "N" numbers on them. Perhaps there is something wrong with one flying but that might ? it's like a car running without any license plates on it. But this person is Mr. Wilkett and we talked a moment ago about wasting people's time and money with this kind of thing but I had two calls from two different people from the FFA in Seattle. This packet of information was sent from Washington, D.C. to Seattle and those people were told to investigate the allegations. I'm not sure what his point is, whether he's trying to chase the airplanes from the sky from flying over Blaine. We are on an airway between Bellingham and Vancouver and I guess we do have airliners flying over and we have small planes flying over too. But whether he's trying to eliminate that or what, I don't know, but he's causing a lot of officials, including myself, to have to spend time responding to this kind of stuff. On the 18th of this month a couple of these people will be in town and they will be interviewing me on this matter

and they presumably will be interviewing Mr. Wilkett. I think the Council should be aware of what's going on and perhaps ask Mr. Wilkett what he is after. It doesn't seem to be related to the airport but anyway. Thank you.

ADVISORY COMMITTEES

Groundwater Management Committee

Councilmember Hansen reported that this committee met on October 29th. The final issue papers are to be discussed at the next meeting. It was proposed that signs be put up in various areas to remind citizens that this is where the water comes from to deter people from polluting the area.

Drayton Harbor Watershed Program

Councilmember Hansen reported that one of the topics that was discussed was possibly forming under the county a shellfish protection district. It's a means of getting funds to protect the resources. They are also recommending to the Department of Health that they establish a low-interest loan fund so that persons with septic tanks problems can borrow money to fix them. If the City of Blaine annexes any more land they will be recommending that the critical areas and wetlands ordinance be changed as they are not strict enough to protect water quality at Drayton Harbor.

Downtown Shoreline Comprehensive Study Committee

Mayor Hagen reported on last Wednesday's imaging meeting in the Library. It will be derived from this meeting what the people of Blaine think their image should be. Another meeting won't be held until January.

OLD BUSINESS

Sweet Road Water Purchase by City of Blaine

It is recommended that Council adopt a motion to authorize the City Manager to execute the Interlocal Agreement with the Sweet Road Water Association and to pay off the City's remaining debt with the Farmer's Home Loan, approximately $22,759.84 which actions will give ownership of the water mains in that area to the City of Blaine.

Pat Floyd referred to a change made and that is the addition of the last paragraph, page 2, "The City and Association agree that the City will assume loans held by the Association to its Behme Road Customers in the amount of approximately $2,677.44 each, the City paying the Association $1,000.00 each, said customers agreeing to sign a promissory note to the City thereby transferring their loan to the City."

MOTION BY BURTON, SECOND BY HANSEN TO AUTHORIZE CITY MANAGER TO SIGN THE INTERLOCAL AGREEMENT WITH THE SWEET ROAD WATER ASSOCIATION. MOTION PASSED.

Board/Commission Applicants

It was the consensus of the Council that they will interview candidates individually.

Councilmember Hansen referred to the communication received fromChief Gary Franz and also a comment from Councilmember White about the qualifications for the Board of Appeals. She would like clarification on just what the Board of Appeals' responsibilities are and what their qualifications need to be.

Councilmember White stated he had spoken with Chief Franz about the difficulty in getting qualified persons to serve on these Boards and Commissions. Chief Franz is suggesting that we look at the ordinance and possibly go outside the area to advertise for people to sit on the Boards. Councilmember White prefers to find qualified people in this area.

STANDING COMMITTEES

Works and Utilities

Councilmember Burton reported on the following issues that transpired at the 4:00 p.m. Works and Utilities meeting:

1. Cathy Bates' request for waiver of hookup fees at vacant lot at 966 Blaine Avenue since they believe it has already been serviced with water and sewer. Leroy Dougall has been unable to find these hookups on this lot. A two-week time frame was given to Mr. Bates to find water and sewer service on property and if they are there Leroy will check to see if they are still serviceable.

2. LID #30, (Tabled 6/23/92) Water/Sewer Plan Considerations and Service Request of Doug Bates (3 Lots). Staff was instructed to rework formula in that area.

3. Karl Slotman's request for waiver of his utility accounts and late penalties at Waterside Condominiums since most of the units were unoccupied. He has accumulated an $795.00 late payment penalty and $3,491.31 utilities charges for his six units and is requested a waiver of some of these charges since the majority of them were unoccupied.

MOTION BY BURTON, SECOND BY WHITE TO RECOMMEND THAT THERE WILL BE NO WAIVER OF PAYMENTS OF KARL SLOTMAN. MOTION PASSED.

4. LID #28 - Major Street/Utility Reconstruction of Boblett and Fir Streets, south of school district. Work tentatively scheduled in 1994.

5. Post Office sent check for $84,000 to cover utility charges.

6. Request from Christina Olason for waiver of penalty fee.

MOTION BY BURTON, SECOND BY WHITE THAT A LETTER BE SENT TO CHRISTINA OLASON STATING THAT THERE WILL NOT BE A WAIVER OF THE LATE FEE. MOTION PASSED.

7. Letter from Nancy Feagin, Department of Health, regarding poor quality of running water, copy with Manager's report.

Mayor Hagen informed Council that Mr. Charles Stone contacted her regarding vacation of some of his property. Mr. Elich will summarize the details in a forthcoming memo.

Administrative/Fiscal

Councilmember Hansen reported on the following:

1. TCI Cablevision proposing another 15-year contract with a 3-1/2% increase. The committee is recommending that negotiations begin with another cable television company. Council concurred with Committee's request to submit a Request for Proposal.

Mayor Hagen will secure information from the Sumas community regarding their cable and report back to Council.

2. Business License Fees Increase -- A Committee of the Whole meeting will be held on November 23rd at 6:00 p.m. to discuss this possibility.

3. Letter from Mayor Robert Mitchell, City of Sumas, requesting input from all of the Cities regarding funding for the Health Department to construct their own building. City of Blaine is asked to contribute $1,860 to this fund.

MOTION BY HANSEN, SECOND BY HAGEN THAT LETTER BE SENT TO ROBERT MITCHELL, MAYOR OF CITY OF SUMAS, EXPRESSING REGRET THAT THE CITY OF BLAINE DOES NOT HAVE FUNDS TO COMMIT IN 1993. MOTION PASSED.

4. LID #24 - Request from Finance Department for an interim interest rate for property sales.

MOTION BY HANSEN, SECOND BY WHITE THAT AN INTERIM INTEREST RATE OF 7% BE APPROVED. MOTION PASSED.

5. Senior Center and Boys and Girls Club Plans - Staff is working to get this bonded in 1993 instead of 1994 and the staff was commended for their work.

6. Request from Finance Department to draw up an ordinance to add charge for NSF checks.

MOTION BY HANSEN, SECOND BY WHITE THAT CITY ATTORNEY DRAW UP AN ORDINANCE TO CHARGE A $20.00 FEE FOR NSF CHECKS ON ALL TYPES OF CHECKS. MOTION PASSED.

MANAGER'S REPORT

Patrick Floyd reported on the following:

1. He received a call from the DNR that day agreeing to reimburse the City 90% of the $75,000 for the Marine Center Grant, approximately $67,000. They will be doing a visual, on-site inspection December 3, at 1:00 p.m.

2. Councilmember Nelson received her copy of the city-owned property map and she was very appreciative and elated. This map was produced by Steve Pierce of Public Works.

Councilmembers were given copies of new address maps.

3. Letter from Whatcom Transit Authority acknowledging their receipt of resolution passed by the Blaine City Council on October 26, 1992, entitled "City of Blaine Proposal to the Whatcom Transit Authority". Notification will be sent regarding W.T.A. Board action on the final Plan.

FURTHER BUSINESS

The following Council meetings will commence at 6:30 p.m. in November and December, 1992 for directions regarding Union Negotiations:

November 23
December 14
December 28

Councilmember Nelson expressed her thanks to Tory Tjersland and Pat Floyd for the map.

The meeting adjourned at 8:45 p.m.

MAYOR

CITY CLERK

CITY OF BLAINE

WATER SERVICE OUTSIDE CITY LIMITS INTERIM POLICY

Parcels lying outside the City limits cannot be processed for water service without first determining that the City may indeed serve those properties with City water.

Applicants initiate this determination process by submitting to the City Public Works Department the following two completed forms (copies attached), one each per parcel:

1. Whatcom County Health Department *Water Availability Notification for Public Water*, and
2. Whatcom County Health Department *Water Denial Form Public Water System Form for Land Use Applications*.

If staff determines that the City **may serve** water to the property, then:

1. Staff will process the *Water Availability Notification for Public Water* forms.
2. Once you are ready for actual water service, you would then submit a completed Utility Request form for <u>each lot</u> to the City Public Works Department.

If, however, staff determines that the City **may not serve** the property, then staff will process the *Water Denial Form Public Water System Form for Land Use Applications* forms.

In either determination above (i.e., water is available, water is not available), staff will provide to you the City-processed forms.

Please note the following regarding City water and City sewer utilities in general:

A. The City may only provide sewer service within its legal limits. It cannot provide sewer service outside its legal limits, including its Urban Growth Area (UGA).

B. Pending formal verification by the City Council (which might occur by the end of this month), staff is informally basing decisions regarding water connection potential outside the City's legal limits on the following criteria:

   1. The City will consent to new or expanded service connections to those portions of the City-owned water distribution system that lie outside the City limits and **whose owners make formal written request for service using the Whatcom County water service availability form** [emphasis added], but only if at least one of the following six conditions exists:

      a. The owner(s) present to the City evidence of a former unexpired written commitment by the City to provide potable water service to said property, and formally acknowledge that they shall assume all costs of establishing and preserving the potable water utility service connection to said property.

      b. The owner(s) present to the City evidence that the property lies within the former Sweet Road Water Association service area, and City records reveal that an unused water share(s) exist(s) for said property.

      c. The owner(s) present to the City evidence that the property lies within the boundaries of ULID 33, and City records reveal a corresponding assessment account in good standing.

d. The property abuts a public right-of-way or utility easement that contains a City-owned water main existing as of the date of this resolution, and the following four sub conditions can be met:

   1) The connection would be provided to serve a rural density not greater than the zoning approved by Whatcom County, and the density is not increased by virtue of the provision of City water service, and

   2) The City can satisfy WAC 246-290-230(5) minimum pressure requirements, and

   3) The City can satisfy WAC 246-290-230(6) fire flow requirements, particularly if Whatcom County has conditioned its Building Permit or development approval on the City satisfying those fire flow requirements, and

   4) The property owner(s) formally acknowledge that they shall assume all costs of establishing and preserving the potable water utility service connection.

e. The property already enjoys an active City potable water service account in good standing, and the owner(s) desire to extend water service to an existing or new structure (e.g., an Accessory Dwelling Unit, a detached garage) on the property. New structures will require evidence of an approved County building permit. As a condition of the City providing additional water service to that property, the owner(s) must execute a Deed Notice that precludes the owner's ability to subdivide and separate the services to separate parcels.

f. Whatcom County formally asks the City to provide potable water service to a particular property to "protect basic public health and safety and the environment" per RCW 36.70A.110(4) and confirms that providing such service does not permit urban development per RCW 36.70A.110(4), and the owner(s) formally acknowledge that they shall assume all costs that associate with establishing and preserving the potable water service connection.

2. Using the criteria above, the Public Works Department Director, or his/her formally assigned delegate, shall either consent or deny in writing all requests for new or expanded potable water utility service connections to those portions of the City-owned water distribution system that lie outside the City limits.

3. Aggrieved potable water utility service requestors may appeal written availability determinations to the Hearing Examiner in a manner consistent with BMC 17.06.180, "Appeals".

Account Number	Description	Current Fee	Rate Basis	Authority
Water Fees - Title 13				
	Water Service, Base Rates:			
410.000.034.343.41	3/4" Meter City (Volume allowance 0-3 ccf)	$ 11.20	per account	BMC 13.07.040
410.000.034.343.41	3/4" Meter City Senior/Disabled Low Income (Volume allowance 0-3 ccf)	$ 8.96	per account	BMC 13.07.040
410.000.034.343.41	1" Meter City (Volume allowance 0-6 ccf)	$ 21.13	per account	BMC 13.07.040
410.000.034.343.41	1.5" Meter City (Volume allowance 0-10 ccf)	$ 37.66	per account	BMC 13.07.040
410.000.034.343.41	2" Meter City (Volume allowance 0-15 ccf)	$ 57.50	per account	BMC 13.07.040
410.000.034.343.41	3" Meter City (Volume allowance 0-28 ccf)	$ 110.42	per account	BMC 13.07.040
410.000.034.343.41	4" Meter City (Volume allowance 0-44 ccf)	$ 169.95	per account	BMC 13.07.040
410.000.034.343.41	6" Meter City (Volume allowance 0-87 ccf)	$ 335.30	per account	BMC 13.07.040
410.000.034.343.41	8" Meter City (Volume allowance 0-138 ccf)	$ 533.73	per account	BMC 13.07.040
410.000.034.343.41	3/4" Meter Federal Agency (Volume allowance 0-3 ccf)	$ 12.15	per account	BMC 13.07.040
410.000.034.343.41	1" Meter Federal Agency (Volume allowance 0-6 ccf)	$ 22.93	per account	BMC 13.07.040
410.000.034.343.41	1.5" Meter Federal Agency (Volume allowance 0-10 ccf)	$ 40.86	per account	BMC 13.07.040
410.000.034.343.41	2" Meter Federal Agency (Volume allowance 0-15 ccf)	$ 62.39	per account	BMC 13.07.040
410.000.034.343.41	3" Meter Federal Agency (Volume allowance 0-28 ccf)	$ 119.81	per account	BMC 13.07.040
410.000.034.343.41	4" Meter Federal Agency (Volume allowance 0-44 ccf)	$ 184.40	per account	BMC 13.07.040
410.000.034.343.41	6" Meter Federal Agency (Volume allowance 0-87 ccf)	$ 363.80	per account	BMC 13.07.040
410.000.034.343.41	8" Meter Federal Agency (Volume allowance 0-138 ccf)	$ 579.10	per account	BMC 13.07.040
410.000.034.343.41	3/4" Meter County (Volume allowance 0-3 ccf)	$ 16.80	per account	BMC 13.07.040
410.000.034.343.41	3/4" Meter County Senior/Disabled Low Income (Volume allowance 0-3 ccf)	$ 13.44	per account	BMC 13.07.040
410.000.034.343.41	1" Meter County (Volume allowance 0-6 ccf)	$ 31.70	per account	BMC 13.07.040
410.000.034.343.41	1.5" Meter County (Volume allowance 0-10 ccf)	$ 56.49	per account	BMC 13.07.040
410.000.034.343.41	2" Meter County (Volume allowance 0-15 ccf)	$ 86.25	per account	BMC 13.07.040
410.000.034.343.41	3" Meter County (Volume allowance 0-28 ccf)	$ 165.63	per account	BMC 13.07.040
410.000.034.343.41	4" Meter County (Volume allowance 0-44 ccf)	$ 254.93	per account	BMC 13.07.040
410.000.034.343.41	6" Meter County (Volume allowance 0-87 ccf)	$ 502.95	per account	BMC 13.07.040
410.000.034.343.41	8" Meter County (Volume allowance 0-138 ccf)	$ 800.60	per account	BMC 13.07.040
	Water Service, Commodity Charge/CCF:			
410.000.034.343.41	3/4" Meter City (Volume allowance 4-8 ccf) Block 1	$ 1.71	per ccf	BMC 13.07.040
410.000.034.343.41	3/4" Meter City (Volume >8 ccf) Block 2	$ 2.36	per ccf	BMC 13.07.040
410.000.034.343.41	1" Meter City (Volume allowance 7-16 ccf) Block 1	$ 1.71	per ccf	BMC 13.07.040
410.000.034.343.41	1" Meter City (Volume >16 ccf) Block 2	$ 2.36	per ccf	BMC 13.07.040
410.000.034.343.41	1.5" Meter City (Volume allowance 11-26 ccf) Block 1	$ 1.71	per ccf	BMC 13.07.040
410.000.034.343.41	1.5" Meter City (Volume >26 ccf) Block 2	$ 2.36	per ccf	BMC 13.07.040
410.000.034.343.41	2" Meter City (Volume allowance 16-40 ccf) Block 1	$ 1.71	per ccf	BMC 13.07.040

Account Number		Description	Current Fee	Rate Basis		Authority
410.000.034.343.41		2" Meter City (Volume >40 ccf) Block 2	$ 2.36	per ccf		BMC 13.07.040
410.000.034.343.41		3" Meter City (Volume allowance 29-76 ccf) Block 1	$ 1.71	per ccf		BMC 13.07.040
410.000.034.343.41		3" Meter City (Volume >76 ccf) Block 2	$ 2.36	per ccf		BMC 13.07.040
410.000.034.343.41		4" Meter City (Volume allowance 45-117 ccf) Block 1	$ 1.71	per ccf		BMC 13.07.040
410.000.034.343.41		4" Meter City (Volume >117 ccf) Block 2	$ 2.36	per ccf		BMC 13.07.040
410.000.034.343.41		6" Meter City (Volume allowance 88-232 ccf) Block 1	$ 1.71	per ccf		BMC 13.07.040
410.000.034.343.41		6" Meter City (Volume >232 ccf) Block 2	$ 2.36	per ccf		BMC 13.07.040
410.000.034.343.41		8" Meter City (Volume allowance 139-368 ccf) Block 1	$ 1.71	per ccf		BMC 13.07.040
410.000.034.343.41		8" Meter City (Volume >368 ccf) Block 2	$ 2.36	per ccf		BMC 13.07.040
410.000.034.343.41		3/4" Meter Federal Agency (Volume allowance 4-8 ccf) Block 1	$ 1.86	per ccf		BMC 13.07.040
410.000.034.343.41		3/4" Meter Federal Agency (Volume >8 ccf) Block 2	$ 2.56	per ccf		BMC 13.07.040
410.000.034.343.41		1" Meter Federal Agency (Volume allowance 7-16 ccf) Block 1	$ 1.86	per ccf		BMC 13.07.040
410.000.034.343.41		1" Meter Federal Agency (Volume >16 ccf) Block 2	$ 2.56	per ccf		BMC 13.07.040
410.000.034.343.41		1.5" Meter Federal Agency (Volume allowance 11-26 ccf) Block 1	$ 1.86	per ccf		BMC 13.07.040
410.000.034.343.41		1.5" Meter Federal Agency (Volume >26 ccf) Block 2	$ 2.56	per ccf		BMC 13.07.040
410.000.034.343.41		2" Meter Federal Agency (Volume allowance 16-40 ccf) Block 1	$ 1.86	per ccf		BMC 13.07.040
410.000.034.343.41		2" Meter Federal Agency (Volume >40 ccf) Block 2	$ 2.56	per ccf		BMC 13.07.040
410.000.034.343.41		3" Meter Federal Agency (Volume allowance 29-76 ccf) Block 1	$ 1.86	per ccf		BMC 13.07.040
410.000.034.343.41		3" Meter Federal Agency (Volume >76 ccf) Block 2	$ 2.56	per ccf		BMC 13.07.040
410.000.034.343.41		4" Meter Federal Agency (Volume allowance 45-117 ccf) Block 1	$ 1.86	per ccf		BMC 13.07.040
410.000.034.343.41		4" Meter Federal Agency (Volume >117 ccf) Block 2	$ 2.56	per ccf		BMC 13.07.040
410.000.034.343.41		6" Meter Federal Agency (Volume allowance 88-232 ccf) Block 1	$ 1.86	per ccf		BMC 13.07.040
410.000.034.343.41		6" Meter Federal Agency (Volume >232 ccf) Block 2	$ 2.56	per ccf		BMC 13.07.040
410.000.034.343.41		8" Meter Federal Agency (Volume allowance 139-368 ccf) Block 1	$ 1.86	per ccf		BMC 13.07.040
410.000.034.343.41		8" Meter Federal Agency (Volume >368 ccf) Block 2	$ 2.56	per ccf		BMC 13.07.040
410.000.034.343.41		3/4" Meter County (Volume allowance 4-8 ccf) Block 1	$ 2.57	per ccf		BMC 13.07.040
410.000.034.343.41		3/4" Meter County (Volume >8 ccf) Block 2	$ 3.54	per ccf		BMC 13.07.040
410.000.034.343.41		1" Meter County (Volume allowance 7-16 ccf) Block 1	$ 2.57	per ccf		BMC 13.07.040
410.000.034.343.41		1" Meter County (Volume >16 ccf) Block 2	$ 3.54	per ccf		BMC 13.07.040
410.000.034.343.41		1.5" Meter County (Volume allowance 11-26 ccf) Block 1	$ 2.57	per ccf		BMC 13.07.040
410.000.034.343.41		1.5" Meter County (Volume >26 ccf) Block 2	$ 3.54	per ccf		BMC 13.07.040
410.000.034.343.41		2" Meter County (Volume allowance 16-40 ccf) Block 1	$ 2.57	per ccf		BMC 13.07.040
410.000.034.343.41		2" Meter County (Volume >40 ccf) Block 2	$ 3.54	per ccf		BMC 13.07.040
410.000.034.343.41		3" Meter County (Volume allowance 29-76 ccf) Block 1	$ 2.57	per ccf		BMC 13.07.040
410.000.034.343.41		3" Meter County (Volume >76 ccf) Block 2	$ 3.54	per ccf		BMC 13.07.040
410.000.034.343.41		4" Meter County (Volume allowance 45-117 ccf) Block 1	$ 2.57	per ccf		BMC 13.07.040

Account Number	Description	Current Fee	Rate Basis	Authority
410.000.034.343.41	4" Meter County (Volume >117 ccf) Block 2	$ 3.54	per ccf	BMC 13.07.040
410.000.034.343.41	6" Meter County (Volume allowance 88-232 ccf) Block 1	$ 2.57	per ccf	BMC 13.07.040
410.000.034.343.41	6" Meter County (Volume >232 ccf) Block 2	$ 3.54	per ccf	BMC 13.07.040
410.000.034.343.41	8" Meter County (Volume allowance 139-368 ccf) Block 1	$ 2.57	per ccf	BMC 13.07.040
410.000.034.343.41	8" Meter County (Volume >368 ccf) Block 2	$ 3.54	per ccf	BMC 13.07.040
410.000.034.343.42	Water - Utilities Service Reinstatement (7:30 - 3:30 pm)	$ 25.00	per account	BMC 13.07.040
410.000.034.343.42	Water - After Hours Utilities Service Reinstatement (after 3:30 pm)	$ 140.00	per account	BMC 13.07.040
410.000.034.359.90	Water Late Payment Penalties	$ 5.00	per account	BMC 13.07.040
	Fire Service Rates: (Resolution No. 1505-08)			
410.000.034.343.41	2" Meter City	$ 4.77	per account	BMC 13.07.040
410.000.034.343.41	4" Meter City	$ 12.47	per account	BMC 13.07.040
410.000.034.343.41	6" Meter City	$ 23.77	per account	BMC 13.07.040
410.000.034.343.41	8" Meter City	$ 36.45	per account	BMC 13.07.040
410.000.034.343.41	2" Meter Federal Agency	$ 5.17	per account	BMC 13.07.040
410.000.034.343.41	4" Meter Federal Agency	$ 13.53	per account	BMC 13.07.040
410.000.034.343.41	6" Meter Federal Agency	$ 25.80	per account	BMC 13.07.040
410.000.034.343.41	8" Meter Federal Agency	$ 39.55	per account	BMC 13.07.040
410.000.034.343.41	2" Meter County	$ 7.16	per account	BMC 13.07.040
410.000.034.343.41	4" Meter County	$ 18.71	per account	BMC 13.07.040
410.000.034.343.41	6" Meter County	$ 35.66	per account	BMC 13.07.040
410.000.034.343.41	8" Meter County	$ 54.68	per account	BMC 13.07.040
	Temporary/Construction Meters, Deposit: (Resolution No. 1505-08)			
410.000.034.343.41	3/4" Meter	$ 77.93	per meter	BMC 13.07.040
410.000.034.343.41	1" Meter	$ 77.93	per meter	BMC 13.07.040
410.000.034.343.41	1.5" Meter	$ 155.85	per meter	BMC 13.07.040
410.000.034.343.41	2" Meter	$ 155.85	per meter	BMC 13.07.040
410.000.034.343.41	Hydrant	$ 311.70	per meter	BMC 13.07.040
	Temporary/Construction Meters, Monthly Base Fee: (Resolution No. 1505-08)			
410.000.034.343.41	3/4" Meter City	$ 31.17	per meter	BMC 13.07.040
410.000.034.343.41	1" Meter City	$ 31.17	per meter	BMC 13.07.040
410.000.034.343.41	1.5" Meter City	$ 62.34	per meter	BMC 13.07.040
410.000.034.343.41	2" Meter City	$ 62.34	per meter	BMC 13.07.040
410.000.034.343.41	Hydrant City	$ 155.85	per meter	BMC 13.07.040
410.000.034.343.41	Hydrant Federal Agency	$ 169.88	per meter	BMC 13.07.040
410.000.034.343.41	3/4" Meter County	$ 46.76	per meter	BMC 13.07.040
410.000.034.343.41	1" Meter County	$ 46.76	per meter	BMC 13.07.040

Account Number		Description	Current Fee	Rate Basis		Authority
410.000.034.343.41		1.5" Meter County	$ 93.51	per meter		BMC 13.07.040
410.000.034.343.41		2" Meter County	$ 93.51	per meter		BMC 13.07.040
410.000.034.343.41		Hydrant County	$ 233.78	per meter		BMC 13.07.040
		Temporary/Construction Meters, Commodity Charge/CCF:				
410.000.034.343.41		3/4" Meter City	$ 1.71	per ccf		BMC 13.07.040
410.000.034.343.41		1" Meter City	$ 1.71	per ccf		BMC 13.07.040
410.000.034.343.41		1.5" Meter City	$ 1.71	per ccf		BMC 13.07.040
410.000.034.343.41		2" Meter City	$ 1.71	per ccf		BMC 13.07.040
410.000.034.343.41		Hydrant City	$ 1.71	per ccf		BMC 13.07.040
410.000.034.343.41		3/4" Meter Federal Agency	$ 1.86	per ccf		BMC 13.07.040
410.000.034.343.41		1" Meter Federal Agency	$ 1.86	per ccf		BMC 13.07.040
410.000.034.343.41		1.5" Meter Federal Agency	$ 1.86	per ccf		BMC 13.07.040
410.000.034.343.41		2" Meter Federal Agency	$ 1.86	per ccf		BMC 13.07.040
410.000.034.343.41		Hydrant Federal Agency	$ 1.86	per ccf		BMC 13.07.040
410.000.034.343.41		3/4" Meter County	$ 2.57	per ccf		BMC 13.07.040
410.000.034.343.41		1" Meter County	$ 2.57	per ccf		BMC 13.07.040
410.000.034.343.41		1.5" Meter County	$ 2.57	per ccf		BMC 13.07.040
410.000.034.343.41		2" Meter County	$ 2.57	per ccf		BMC 13.07.040
410.000.034.343.41		Hydrant County	$ 2.57	per ccf		BMC 13.07.040
		Water Bulk Service Fees: (Resolution No. 1505-08)				
410.000.034.343.41		Bulk water usage charge	$ 20.78	First 2 ccf each day		
410.000.034.343.41		Bulk water usage charge	$ 2.37	per ccf over 2		
		Water Service Connection Fees, Hydrant Meters: (Resolution No. 1505-08)				
410.000.034.343.43		Water Hydrant Fee - Within City Limits (up to a maximum amount)	$ 538.72	$0.01/sf of property, not to exceed $538.72		BMC 13.07.020
410.000.034.343.43		Water Hydrant Fee - Outside City Limits (up to a maximum amount)	$ 808.08	$0.015/sf of property, not to exceed $808.08		BMC 13.07.020
Water Service Miscellaneous Fees:						
		Meter Test Fees: (Resolution No. 1505-08)				
410.000.034.343.43		3/4" - 1" Meter	$ 53.87	per meter		BMC 13.14.090
410.000.034.343.43		1&1/2" - 2" Meter	$ 80.81	per meter		BMC 13.14.090
410.000.034.343.43		3" or greater Meter	$ 107.74	per meter (with test port)		BMC 13.14.090
410.000.034.343.43		3" or greater Meter	$ -	Time & materials (w/out test port)		BMC 13.14.090
410.000.034.343.43		Water meter removal (within City limits)	$ 43.10	per meter		BMC 13.14.090
410.000.034.343.43		Water meter removal (outside City limits)	$ 64.65	per meter		BMC 13.14.090
410.000.034.343.43		Cross-connection control device test/inspection (within City limits)	$ 26.94	per connection		BMC 13.14.090
410.000.034.343.43		Cross-connection control device test/inspection (outside City limits)	$ 40.41	per connection		BMC 13.14.090

Account Number	Description	Current Fee	Rate Basis	Authority
Water Service Connection Fees:				
	Water Service and meter: (Resolution No. 1505-08)			
410.000.034.343.44	Water - Connection Fee - Within City Limits - 3/4"	$ 974.21	Per Connection	BMC 13.07.020
410.000.034.343.44	Water - Connection Fee - Within City Limits - 1"	$ 1,047.30	Per Connection	BMC 13.07.020
410.000.034.343.44	Water - Connection Fee - Within City Limits - 1-1/2"	Actual Cost	Per Connection	BMC 13.07.020
410.000.034.343.44	Water - Connection Fee - Within City Limits - 2"	Actual Cost	Per Connection	BMC 13.07.020
410.000.034.343.44	Water - Connection Fee - Within City Limits - >2"	Actual Cost	Time & Materials	BMC 13.07.020
410.000.034.343.44	Water - Connection Fee - Outside City Limits - 3/4"	$ 1,461.32	Per Connection	BMC 13.07.020
410.000.034.343.44	Water - Connection Fee - Outside City Limits - 1"	$ 1,570.95	Per Connection	BMC 13.07.020
410.000.034.343.44	Water - Connection Fee - Outside City Limits - 1-1/2"	Actual Cost	Per Connection	BMC 13.07.020
410.000.034.343.44	Water - Connection Fee - Outside City Limits - 2"	Actual Cost	Per Connection	BMC 13.07.020
410.000.034.343.44	Water - Connection Fee - Outside City Limits - >2"	Actual Cost	Per Connection	BMC 13.07.020
	Water meter only:			
410.000.034.343.44	Water - Connection Fee - Meter only - Within City Limits - 3/4"	$ 220.00	Per Meter Connection	BMC 13.07.020
410.000.034.343.44	Water - Connection Fee - Meter only - Within City Limits - 1"	$ 234.91	Per Meter Connection	BMC 13.07.020
410.000.034.343.44	Water - Connection Fee - Meter only - Outside City Limits - 3/4"	$ 330.00	Per Meter Connection	BMC 13.07.020
410.000.034.343.44	Water - Connection Fee - Meter only - Outside City Limits - 1"	$ 352.37	Per Meter Connection	BMC 13.07.020
	Water General Facility Fees:			
410.000.412.388.11	Water - General Facility Fee - Semiahmoo	$ -	Per ERU	BMC 13.07.020
410.000.413.388.12	Water - General Facility Fee - Within City Limits	$ -	Per ERU	BMC 13.07.020
410.000.413.388.12	Water - General Facility Fee - Outside City Limits	$ 1,162.50	Per ERU	BMC 13.07.020
	Water - Regional Capacity Charge	$ 854.00	Per ERU	
410.000.034.359.90	Meter Tampering	$ 100.00	per account	
ERU = Equivalent Residential Unit				

2008

Annual Drinking Water Quality Report

The City Of Blaine

We're very pleased to provide you with this year's Annual Water Quality Report. We want to keep you informed about the excellent water and services we have delivered to you over the past year. Our goal is, and always has been, to provide to you a safe and dependable supply of drinking water. Our water source is a system of deep wells tapping into aquifers underlying the City's forested reserve east of Boblett Street, south of H Street and west of Harvey Road.

This report shows our water quality and what it means.

If you have any questions about this report or about your water utility, please contact **Frank Arnett at 371-5549**. We want our valued customers to be informed about their water utility. If you want to learn more, you are welcome to attend any of our regularly scheduled City Council meetings held on the second and fourth Mondays of each month at 7:00 p.m. at Blaine City Hall, 344 H Street, Blaine

The City of Blaine routinely monitors for constituents in your drinking water according to Federal and State laws. This table shows the results of our monitoring for the period of January 1st to December 31st, 2008. All drinking water, including bottled drinking water, may be reasonably expected to contain at least small amounts of some constituents. It's important to remember that the presence of these constituents does not necessarily pose a health risk. More information about contaminants and potential health effects can be obtained by calling the Environmental Protection Agency's Safe Drinking Water Hotline at 1-800-426-4791.

The table shows that our system uncovered some problems this year. A seasonal well source contained arsenic concentration of 11 ppb, just above the MCL of 10 ppb. We tested the source water after it was mixed with other sources and before it reached by any customer tap. This test showed a concentration of 2 ppb, well below the 10 ppb MCL. Some people who drink water that contains arsenic in excess of the MCL over many years could experience skin damage or problems with their circulatory system, and may have an increased risk of getting cancer. This is a seasonal well. This test was not taken during normal operation and is not considered a violation.

MCL's are set at very stringent levels. To understand the possible health effects described for many regulated constituents, a person would have to drink two liters of water every day at the MCL level for a lifetime to have a one-in-a-million chance of having the described health effect.

Some people may be more vulnerable to contaminants in drinking water than the general population. Immuno-compromised persons such as persons with cancer undergoing chemotherapy, persons who have undergone organ transplants, people with HIV/AIDS or other immune system disorders, some elderly, and infants can be particularly at risk from infections. These people should seek advice about drinking water from their health care providers. EPA/CDC guidelines on appropriate means to lessen the risk of infection by cryptosporidium and other microbiological contaminants are available from the Safe Drinking Water Hotline (800-426-4791).

Water Conservation
Compliance with Municipal Water Law

As required by the State Department of Health, the City adopted a Water Use Efficiency (WUE) goal in January 2008 through a public process at City Council. The City's WUE goal is to:

Reduce the weather adjusted, "peak season" usage per residential unit by 1% per year each year through 2013.

The City tracks water consumption during the peak July and August billing periods adjusting for the number of days with appreciable rainfall. This evaluation is done on the average residential use and not individual use. During July and August of 2008, the weather adjusted residential water consumption was 13% lower than the preceding five year average, far exceeding our expectations. We will continue to publish annual conservation progress as part of this annual report.

All Blaine water services are currently metered. In 2008 we pumped over 627 million gallons and of that 94% was accounted for as sold to customers. Unmetered uses such as flushing and firefighting are included as system losses which the Water Law says should be less than 10% so our system is in compliance.

In 2009 customers will again be asked to observe a voluntary **odd/even day watering schedule** from June 15th to September 15th similar to 2008. Visit www.cityofblaine.com for more water conservation info.

****

Frequently asked Questions

Q: What is the City of Blaine's water hardness and what does that mean?

A: Our water's hardness is between 46 and 86 ppm. Our water is considered moderate for hardness. If water is too hard, scaling can occur and a water softener may be needed.

Q: What tests are run on our drinking water?

A: The City of Blaine tests for almost 200 parameters including inorganic substances (IOCs), synthetic organic substances (SOCs), volatile organic substances (VOCs), microbial substances, and chlorine disinfection by-products.

Q: How much of the disinfectant Chlorine is in our water?

A: Chlorine is a water additive used to control microbes. Free chlorine residuals are measure at various sites in the distribution system. We range from non-detectable to 1.33 ppm, with an average of 0.058 ppm. The Maximum Residual Disinfectant Level Goal is 4.0 ppm. We detected no microbiological contaminants for 2008.

****

Abbreviations

AL *- Action Level*	The concentration of a contaminant which, if exceeded, triggers treatment or other requirements which a water system must follow.
MCL *- Maximum Contaminant Level*	The highest level of a contaminant that is allowed in drinking water. MCLs are set as close to the MCLGs as feasible using the best available treatment technology.
MCLG *- Maximum Contaminant Level Goal*	The level of a contaminant in drinking water below which there is no known or expected risk to health. MCLGs allow for a margin of safety.
n/a *- Non-applicable*	There is no MCLG established for this compound.
ppm *- parts per million (milligrams per liter)*	One part per million corresponds to one minute in two years or a single penny in $10,000.
ppb *- parts per billion (micrograms per liter)*	One part per billion corresponds to one minute in 2,000 years, or a single penny in $10,000,000.
ND- *Not Detected*	Not Detected within the sensitivity of the instrument.

****

TEST RESULTS

INORGANIC CONTAMINANTS (Measured at wells)

Detected Compounds	Violation Y/N	Detected Range	Average level detected	Units	MCLG	MCL	Likely Source of Contamination
Arsenic*	N	<2 to 11	5.6	ppb	n/a	10	Erosion of natural deposits; runoff from orchards; runoff from glass and electronics production wastes
Cadmium**	N	<0.5 to 2.7	0.9	ppb	5	5	Corrosion of galvanized pipes; erosion of natural deposits; discharge from metal refineries; runoff from waste batteries and paints
Fluoride**	N	<.02 to 0.4	0.2	ppm	4	4	Erosion of natural deposits; water additive which promotes strong teeth; discharge from fertilizer and aluminum factories
Nitrate (as Nitrogen)***	N	<0.5 to 1.1	0.5	ppm	10	10	Runoff from fertilizer use; leaching from septic tanks, sewage; erosion of natural deposits

VOLATILE ORGANIC CONTAMINANTS (Measured in the distribution system)

Contaminant	Violation Y/N	Level Detected	Unit Measurement	MCLG	MCL	Likely Source of Contamination
Haloacetic Acids (HAA)****	N	ND	ppb	n/a	60	By-product of drinking water disinfection
TTHM **** [Total Trihalomethanes]	N	0.58 to 1.02	ppb	n/a	80	By-product of drinking water chlorination

* Testing done between 10/12/06 and 8/1/08. Frequency of testing is set by Department of Health regulations.

** Testing done between 10/12/06 and 7/17/08. Frequency of testing is set by Department of Health regulations

*** Testing done in 2008

**** Testing done 7/29/08. Frequency of testing is set by Department of Health regulations.

INORGANIC PARAMETERS (Measured at home sites)

Detected Compounds	Violation Y/N	Detected Range	90th Percentile	Unit Measurement	MCLG	AL	Typical source
Lead*	N	<1-15	2	ppb	0	15	Corrosion of household plumbing systems, erosion of natural deposits
Copper*	N	.008-.44	0.12	ppm	1.3	1.3	Corrosion of household plumbing systems; erosion of natural deposits.

* Test dates for lead and copper were 9/20/06 and 5/16/07. Frequency of testing is set by DOH regulations. Testing is conducted at 20 home sites within the water system.

SECONDARY EPA REGULATED PARAMETERS

Detected Compounds	Violation Y/N	Detected Range	Average level detected	Unit Measurement	MCL
Manganese*	N	<0.005-0.05	0.024	ppm	0.05
iron*	N	<0.0015-0.14	.04	ppm	0.3
Chloride**	N	2.3-46	18.2	ppm	250
Sulfate**	N	4.1-14	8.9	ppm	250

* Testing done between 10/12/06 and 7/5/07. Frequency of testing is set by Department of Health regulations.

** Testing done between 4/25/07 and 7/29/08. Frequency of testing is set by Department of Health regulations

SUMMARY OF CITY PRODUCTION WELLS

Well Number	Other Designations	Ecology Tag	Location		Well Construction Information																Well Yield / Aquifer Parameters						
								Casing Depth					Static Water Levels			Screen/Open Interval												
			Latitude	Longitude	Construction Date	Ground Surface Elevation	Well Depth	6-in	8-in	10-in	12-in	16-in	Date	Depth	Elevation	Diameter (inches)	Depth to Top	Elevation Top	Depth to Bottom	Elevation Bottom	Discharge (gpm)	Drawdown (feet)	Specific Capacity (gmp/ft)	Aquifer Transmissivity (ft^2/d)	Aquifer Storativity	Hydro Unit	Comments/References
PW-1					1926	178.0	746.0	676-746	171-676	171-676	0-171		1/24/1992	107.0	71.0	8.0	172.0	6.0	746.0	-568.0						E	Golder 2/24/92 - Well Abandoned
PW-1R	PW-1A	ABE837	48.98421	122.68342	10/1/1995	182.0	733.0		652-733	0-132	0-733		11/3/1995	116.0	66.0	8.0	706.0	-524.0	726.0	-544.0	536.0	127.0	4.2	3000 - 5600	$5X10^{-4}$ - $5X10^{-3}$	E	Golder 1/30/96
													3/25/1998											2050 - 2330	$4.9X10^{-4}$ - $5.6X10^{-4}$		Golder 4/21/98
													4/24/2007	127.9	54.1											
PW-2		AGK383	48.98444	122.68410	4/11/1963	182.0	700.0	405.5-605.5	0-448	0-190			1/24/1992	109.0	73.0	6.0	605.5	-423.5	641.5	-459.5						E	Golder 2/24/92
													5/26/1992	105.0	77.0						200.0		720.0	$1X10^{-4}$ - $2.5X10^{-4}$		Golder 6/22/92
													3/25/1998											1810 - 2120	$5.3X10^{-4}$ - $7.9X10^{-4}$		Golder 4/21/98
													4/24/2007	127.7	54.3								2970-3800	0.0009		AESI 6/20/07
PW-3			48.98471	122.68159	1961	198.0	75.0		0-75				1961	0.0	198.0	8.0	65.0	133.0	75.0	123.0	404.0	10.0	40.4			C	
PW-3R	PW-3A	ABY237	48.98335	122.68373	3/1/1998	169.0	858.0	673-741			0-651	0-405	3/25/1998	120.0	49.0	6.0	673.0	-504.0	741.0	-572.0	402.0	175.0	2.3	1530 - 1850		E	Golder 4/21/98
													4/24/2007	131.6	37.4								1650-3770	0.0011		AESI 6/20/07
PW-4	PW-4.1	AGK378				225.0	98.0	82-98	0-84				6/28/1965	24.5	200.5	6.0	82.0	143.0	98.0	127.0	600.0	54.0	11.1			C	
PW-4.1	PW-4.2	AFT324	48.98468	122.68126	4/25/2005	210.0	108.0	86-99			0-86	0-85	4/18/2005	22.6	187.4	12.0	86.0	124.0	99.0	111.0	250.0	52.1	4.8				
PW-5.0	TW-3	AGK384	48.98566	122.68684	8/4/1975	193.0	320.0	254-290	0-262				8/13/1975	78.0	115.0	6.0	262.0	-69.0	282.0	-89.0	545.0	73.2	7.4	1600.0	$5X10^{-4}$	D	S&W Nov. 1975
PW-5.1	PW-5R		48.98278	122.68690	4/17/2007	145.0	820.0		715-805		0-720	0-387	4/24/2007	81.3	63.7	8.0	720.0	-575.0	800.0	-655.0	1260.0	348.4	3.6	2150-2700		E	AESI 6/20/07
PW-6	Well No. 19	AGK377	48.98498	122.68829	11/7/1985	155.0	261.0		230-261		0-245		11/14/1985	75.0	80.0	8.0	245.0	-90.0	261.0	-106.0				1600 - 2400		D	S&W Nov. 1975
PW-7	12th Street	ABB959			1929	65.0	247.0				0-177		8/23/2007	0.0	65.0	11.3	177.0	-112.0	200.0	-135.0						D	
PW-8	Lincoln Park	AGK376	48.99649	122.72792	10/21/1969	185.0	200.0				0-174		8/23/2007	106.5	78.5	11.3	174.0	11.0	200.0	-15.0				3056-3361	$1.53X10^{-4}$	D	AESI 10/24/07
PW-8.1		BAM401	48.99636	122.72880	7/25/2007	165.0	760.0				135-280	0-153	8/23/2007	90.5	74.5	12.0	150.0	15.0	280.0	-115.0	525.0	40.1	13.1	2908-3089			AESI 10/24/07
PW-9	Boblett Street	AGK382	48.99072	122.70887	7/10/1991	175.0	303.0		258.5-296.5		0-265		7/15/1991	84.2	90.8	8.0	271.5	-96.5	296.5	-121.5	200.0	145.0	1.4	330.0	0.005	D	Golder 11/17/95

STATE OF WASHINGTON
DEPARTMENT OF HEALTH
20435 72nd Ave. S. , Suite 200, K17-12 • Kent, Washington 98032 -2358

March 23, 2009

STEVE BANHAM, PE
PUBLIC WORKS DIRECTOR
CITY OF BLAINE
1200 YEW AVE
BLAINE WA 98230

Subject: Blaine, City of PWS ID #07300 U
Whatcom County
Well 5.1 Improvements – Permanent Connection
Submittal #09-0304
Reference: Submittal #07-0610

Dear Mr. Banham:

Project Approval

The engineering report, plans, and specifications for the project noted above, which were submitted by your engineer, Dale Buys, PE, and received in this office March 4, 2009, have been reviewed and are hereby approved. This approval is only valid as it relates to current standards outlined in WAC 246-290, revised July 2004. Future revisions in the rules may be more stringent and require facility modifications or corrective action.

Miscellaneous Notes Regarding Well 5.1

Existing well 5.1 was previously brought on line as an "emergency source" with temporary connecting piping and a 300 gpm well pump for the event the City needed it to meet peak summer demands in 2007 and 2008 (see DOH submittal #07-0610). This project installs the permanent connecting piping and related facilities, but the 300 gpm well pump will remain for the time being (it will eventually be replaced with a 1250 gpm well pump). **This well should be reclassified as a "permanent source" in our Sentry data base when this project is complete.**

This approval is based in part on a "self assessment" of water rights as discussed herein and in the previous submittal (DOH submittal #07-0610). WSDOH is making this approval based upon the City's assurances that adequate water rights have been secured to cover all existing and proposed water use that may result from our approval of this project.

Required Follow-up

1. Please verify that the new well casing is fitted with a screened casing vent.

2. As required in WAC 246-290-120(5) within sixty days following the completion of and prior to the use of the above project or portions thereof, the enclosed construction report must be completed by a professional engineer and returned to this department.

3. In addition, please complete and submit the enclosed Pressure, Leakage, and Bacteriological Test Report form for applicable portions of this project. This form is necessary to ensure that all distribution facilities have been tested in accordance with the approved specifications and WAC 246-290-120.

Related Work to be Completed

The City's operation and maintenance manual must be updated to include the new well. The manufacturer's O&M material, final pump curve, and a description of controls should also be included.

Miscellaneous

Regulations establishing a schedule of fees for review of planning, engineering and construction documents have been adopted (WAC 246-290-990). An invoice for $377.00 is enclosed. Please remit your complete payment in the form of a check or money order within thirty days of the date of this letter to: WSDOH, Revenue Section, PO Box 1099, Olympia, WA 98507-1099.

WAC 246-290-120(8) provides that if construction of the project has not been started within two years of the date of this letter, this approval will become null and void unless you take action at that time to arrange for an extension of the approval in the manner prescribed.

Nothing in this approval shall be construed as satisfying other applicable federal, state, or local statutes, ordinances and regulations.

If you have any questions regarding the above, please call me at 253-395-6761.

Yours truly,

John P. Thielemann, PE
Regional Engineer
Northwest Drinking Water Operations

Enclosures

cc: Laurette Rasmussen, Whatcom County Health Department
Steve Hulsman, WSDOH – Northwest Drinking Water Operations
Leroy Dougall, Public Works Superintendent, City of Blaine
Dale Buys, Reichhardt & Ebe Engineering, Inc.

RECEIVE
JUL 20 1998
CITY OF BLAINE

STATE OF WASHINGTON

DEPARTMENT OF ECOLOGY

Northwest Regional Office, 3190 - 160th Ave S.E. • Bellevue, Washington 98008-5452 • (425) 649-7000

July 16, 1998

CERTIFIED MAIL
P 115 123 261

City of Blaine
Department of Public Works
1200 Yew Avenue
Blaine, WA 98320

Dear Sir or Madam:

Re: Water Application No. G1-26822

Enclosed is the Department of Ecology's Report of Examination. This report constitutes our determination and order regarding the above referenced application. A copy of the Report of Examination has been sent to the protestant.

This decision may be appealed. Your appeal must be filed with the Pollution Control Hearings Board, PO Box 40903, Olympia, WA 98504-0903 within thirty (30) days of receipt of this order. At the same time, your appeal must be sent to the Department of Ecology c/o Water Resources Appeal Coordinator, PO Box 47600, Olympia, WA 98504-7600. Your appeal alone will not stay the effectiveness of this decision. Stay requests must be submitted in accordance with RCW 43.21B.320. These procedures are consistent with Chapter 43.21B RCW.

Because your application was protested, a permit will not be issued until such time as the appeal period has ended, or in case appeal is made, such appeal has been resolved.

We will advise you when further processing can take place.

Sincerely,

Daniel L. Swenson
Section Supervisor
Water Resources Program

DLS:cv
Enclosure

STATE OF WASHINGTON
DEPARTMENT OF ECOLOGY
PROTESTED
REPORT OF EXAMINATION
TO APPROPRIATE PUBLIC WATERS OF THE STATE OF WASHINGTON

☐ Surface Water (Issued in accordance with the provisions of Chapter 117, Laws of Washington for 1917, and amendments thereto, and the rules and regulations of the Department of Ecology.)

☒ Ground Water (Issued in accordance with the provisions of Chapter 263, Laws of Washington for 1945, and amendments thereto, and the rules and regulations of the Department of Ecology.)

PRIORITY DATE	APPLICATION NUMBER	PERMIT NUMBER	CERTIFICATE NUMBER
November 13, 1992	G1-26822		

NAME
City of Blaine (Dept. of Public Works)

ADDRESS (STREET)	(CITY)	(STATE)	(ZIP CODE)
1200 Yew Avenue	Blaine	Washington	98320

PUBLIC WATERS TO BE APPROPRIATED

SOURCE
Well #9 (Boblett Street Site)
TRIBUTARY OF (IF SURFACE WATERS)

MAXIMUM CUBIC FEET PER SECOND	MAXIMUM GALLONS PER MINUTE	MAXIMUM ACRE FEET PER YEAR
	200	*320

QUANTITY, TYPE OF USE, PERIOD OF USE
Municipal supply/year round as needed

*Total annual quantity for the City of Blaine from this right and all existing rights shall be limited to 2560 acre-feet per year.

LOCATION OF DIVERSION/WITHDRAWAL

APPROXIMATE LOCATION OF DIVERSION/WITHDRAWAL
500 feet west and 1250 feet south from the NE corner of Section 5

LOCATED WITHIN (SMALLEST LEGAL SUBDIVISION)	SECTION	TOWNSHIP N.	RANGE, (E. OR W.) W.M.	W.R.I.A.	COUNTY
Government Lot 1	5	40	1E	1	Whatcom

RECORDED PLATTED PROPERTY

LOT	BLOCK	OF (GIVE NAME OF PLAT OR ADDITION)

LEGAL DESCRIPTION OF PROPERTY ON WHICH WATER IS TO BE USED

Area served by the City of Blaine in accordance with its April 1996 Water System Comprehensive Plan and/or approved periodic updates

DESCRIPTION OF PROPOSED WORKS
12" x 303' well

DEVELOPMENT SCHEDULE		
BEGIN PROJECT BY THIS DATE	COMPLETE PROJECT BY THIS DATE	WATER PUT TO FULL USE BY THIS DATE
1 year from permit issuance	2 years from permit issuance	15 years from permit issuance

REPORT

RECOMMENDATIONS:

I recommend that a permit for well #9 be issued at the requested rate of 200 gpm and 320 acre-feet per year for municipal supply, continuously. The permit should be issued subject to the following provisions.

Provisions:

This authorization to make use of public waters of the state is subjected to existing rights, including any existing rights held by the United States for the benefit of Native American Tribes under treaty or otherwise. If it can be shown that pumping well #9 has a detrimental effect on senior rights, it shall be the responsibility of the City of Blaine to mitigate for these losses or to cease pumping from well #9.

Installation and maintenance of an access port as described in Ground Water Bulletin No. 1 is required. An airline and gauge may be installed in addition to the access port.

This permit is subject to the implementation of the minimum requirements established in the Conservation Planning Requirements: Guidelines for Public Water Systems Regarding Water Use Reporting, Demand Forecasting Methodology and Conservation Programs, March 1994, which are attached.

An approved measuring device shall be installed and maintained in accordance with RCW 90.03.360, WAC 508-64-020 through WAC 508-64-040 (Installation, operation and maintenance requirements attached). Meter readings shall be recorded monthly and this data shall be maintained and be made available to the Department of Ecology upon request.

In order to protect the resource, static water level (SWL) shall be measured at least once each month. Measurements shall be taken after the pump has been shut off a reasonable time to allow water level to return to normal. Ecology's Water Resources section (NWRO) shall be notified if a below normal seasonal drop is measured in SWL, otherwise this data shall be maintained and be made available to Ecology upon request. See attached form.

If pumping of the well authorized by this permit causes chloride concentrations to exceed 99 mg/l, the permittee shall be required to take immediate action to prevent concentrations from increasing. If corrective measures fail to prevent chloride concentrations from exceeding said level in the future, permittee shall relinquish the option to perfect additional allocated quantities regardless of the stage of development.

Quantities recommended may be reduced at the time of certificate issuance commensurate with the actual production of the well and/or the need for this allocation. Should the City of Blaine terminate the wholesale service agreement with Birch Bay Water and Sewer District, necessary adjustments will be made to the quantities granted under this permit, in accordance with actual beneficial requirements.

Existing (old) well #3 shall be properly decommissioned prior to putting well #9 into service.

A water right certificate shall not be issued until a final investigation has been made.

BACKGROUND:

Ground Water Application #:	G1-26822 (well No. 9 - Boblett Street Well)
Name:	City of Blaine - Department of Public Works
Priority Date:	November 13, 1992
Use:	Municipal supply
Legal Notice:	Published May 17 and 24, 1993 In the Westside Record-Journal 200 gpm, municipal supply - year round as needed
Protested by:	Lummi Indian Business Council

The City of Blaine is located in the extreme northwestern corner of Washington State, within Whatcom County and adjacent to the Canadian border. Drayton Harbor separates the city to the east and west. The City of Blaine is approximately 20 miles north of Bellingham.

The Blaine water utility service area includes 2,350 acres inside the city limits and 3,350 acres outside the city limits, with more than 2,100 metered connections serving over 4,600 people. Blaine provides water to two area wholesale water purveyors - Birch Bay Water and Sewer District and the Bell Bay-Jackson Water Association.

The service area also includes the area formerly served by the Sweet Road Water Association (1,650 acres of rural area southeast of the city).

Emergency water restrictions have been required during peak summer months due to high usage caused by tourism, seasonal residents and irrigation requirements. The average daily usage in 1994 was 1.7 million gallons per day (mgd), with a peak day estimate of 4.11 mgd. The recorded average usage per month, for the months of June, July, August and September (1991-1994) was 37% greater than the annual monthly average or 69% greater than the average for the other eight months. The peak demand requirement is not only critical at the present time, but is projected to be a concern for the future.

Blaine's wells can currently produce approximately 3.2 mgd (2.8 mgd certificated). Blaine has enacted an aggressive program to reduce peak demand and increase source production in hopes of reducing peak day shortages.

This proposed withdrawal is located within the Instream Resources Protection Program Water Resource Inventory Area 1, which is regulated by Chapter 173-501 WAC. Withdrawals from well #9 may potentially effect portions of Dakota Creek (which is closed to further appropriations), though the area of effect will be limited to the reach downstream of the zone of influence of mean annual high tide. In accordance with WAC 173-501-030, the stream management reach of Dakota Creek is from the influence of mean annual high tide ... upstream to the headwaters. Therefore, this withdrawal is not subject to the closure of Dakota Creek. Potential impact to tributary streams downstream of the influence of mean annual high tide will be discussed below.

INVESTIGATION:

In considering this application, the investigation included, but was not limited to, research and/or review of:

(1) The State Water Code
(2) Existing water rights held by the City of Blaine
(3) Water well reports (well logs) for the applicants well and logs on neighboring wells
(4) Records on other water rights in the vicinity
(5) Topographic and local area maps
(6) Site visits on June 18, 1996 and May 19, 1998
(7) Conversations and/or meetings with officials from the City of Blaine, the Lummi Nation, Golder Associates and Cascades Environmental Services, Inc.
(8) The Whatcom County Coordinated Water System Plan 1993 (not adopted), the City of Blaine Water System Comprehensive Plan (1996), the Golder Associates Technical Report on the Hydrogeologic Conditions at the Boblett Street Well Site (1995), and the Golder Pumping at Well #9/Replacement of Well #3 - Potential Affects on Dakota Creek Report (1998)
(9) A letter from the Department of Health requesting an expedited review

Approximate location of point of withdrawal:

Government Lot 1, Section 5, T. 40 N., R. 1 E., W.M., within Whatcom County

Well characteristics:

Completed:	July 10, 1991
Diameter:	12 inches
Well head elevation:	175 feet above mean sea level (amsl)
Depth:	303 feet, 128 feet below mean sea level (bmsl)
Water bearing zone:	259 to 298 below ground surface (bgs)
Screened:	271.5 to 291.5 feet bgs
Static Water Level:	84 feet bgs on July 15, 1991 -- 91 feet amsl

A nearby permanent monitoring well, "GWMP-3" is installed in the shallow aquifer as part of the Blaine Ground Water Management Program (GWMP).

Aquifer test results:

Pump testing of well #9 was conducted between July 15, 1991 and July 29, 1991. A 50-horsepower submersible pump, powered by a portable generator, was used for the test. The pump-intake was set at a depth of 240 bgs. Discharge water was routed away from the well site. An orifice weir was used to measure pumping rates.

A step test was used to determine well efficiency and to determine the rate to be used for the constant-rate test. A Golder Associates hydrogeologist monitored the seven-day constant-rate test, at 200 gpm. Results of the constant-rate test were analyzed using the conventional Jacob Drawdown and Theis Recovery graphical methods, and a PC-based well hydraulics program. Based on the test and simulation results, the well appears to be 95 to 100 percent efficient at a pumping rate of 200 gpm. This is the instantaneous rate that Blaine has requested for well #9.

Existing water rights for Blaine:

The following table summarizes the water rights (and pending application) held by Blaine. The quantities listed are taken from existing certificates or claims and may not represent actual quantities perfected or in use.

Control No.	Priority Date	Instantaneous (Qi) granted	Annual (Qa) granted	Comments
Water Right Claim #300037	1926	800 gpm (claimed)	1290 afy (claimed)	Well #1; originally drilled in 1926, redrilled in 1992, in deep aquifer, 730' deep, city has filed a claim for a vested right.
G1-26820A	11/13/92	----------	---------	Well #2; in deep aquifer, application submitted for 200 gpm, 320 afy.
GWC 3912	12/22/58	500 gpm	800 afy	Well #3, has well casing problem, currently pumping 210 gpm, to be decommissioned and replaced with new deeper well.
GWC 5315	5/21/65	400 gpm	640 afy*	Well #4; in upper aquifer, currently pumping 230 gpm, *Qa supplemental to existing rights, limits total system Qa to 2240 afy.
G1-22483C	4/14/75	450 gpm	726 afy*	Well #5, in upper aquifer, currently pumping 350 gpm, *Qa totally supplemental to existing rights.
GWC 5917	7/9/51	320 gpm	448 afy	Well #7, used for peaking purposes only, has H_2S, iron and manganese problems.
GWC 6916	5/7/69	300 gpm	288afy*	Well #8, currently has a plugged screen, capable of producing 300 gpm, *Qa supplemental.

Table 1 Water rights, claim, pending application, and authorized quantities for City of Blaine wells.

Current and projected water demand for the Blaine Water System:

Four types of user groups make up the demand on the Blaine Water System (BWS). residential, commercial/industrial (including irrigation), public authority, and wholesale. The first three categories comprise the actual City of Blaine water usage. The residential group includes over 1,820 residential meter connections (in 1994) and accounts for 24 percent of the total system usage. The daily residential water consumption averages 81 gallons per capita per day (gpcd).

The commercial/industrial group consists of about 276 customers and uses 27 percent of the total demand. The public authority category includes 34 users and consumption of about 3 percent of the total water used. The total City of Blaine per capita usage, including commercial/industrial and public usage, has been averaging 140 gpcd.

BWS has two wholesale water agreements. The largest wholesale water user is the Birch Bay Water and Sewer District (BBWSD). BBWSD's annual consumption has been about 46 percent of all the water produced by the BWS, with a high of 53 percent in 1993. The second wholesale agreement is with the Bell Bay-Jackson Water Association. Their usage is much less, amounting to less than 2 percent of the total system peak demand.

The BWS production capacity is 1,970 gpm based on the instantaneous quantities granted on prior water rights. This is adequate to meet average daily demand, but is not adequate to meet peak demand, especially if any of the wells are not in service. Blaine has an immediate need is to increase instantaneous quantity capabilities in order to meet peak demands and Department of Health Firm Supply requirements. This approval of additional instantaneous quantity from well #9 will improve Blaine's ability to meet peak demand and firm supply requirements.

The following summarizes recent past usage and projections of future use from all user groups.

Year	1995	2005	2015
Service Population	4665	5395	8356
Peak - gpm	2967	3562	4785
Average Annual Use - afy	1545	2171	2867

(This summary was provided by the City of Blaine, based on Appendix C of their Water System Plan.)

Annual allocation:

The requested 200 gpm is equivalent to approximately 320 acre-feet per year. The approval of this request will increase Blaine's total annual quantity from 2240 to 2560 afy. This increase will provide supply for anticipated future annual requirements (to approximately the year 2010). See above projections.

Conservation:

The Blaine City Council has prepared a Water Conservation Plan. The plan contains both supply-side conservation methods and demand-side conservation. The plan's principal goal is to reduce the peak day summer demand by 5 percent, which should thereby reduce the annual amount by 2 percent. Additional reductions are predicted, with reclamation and reuse of wastewater proposed for irrigation within five years.

Seawater Intrusion:

Laboratory results for chloride concentrations from well #9 were 5 milligrams per liter (mg\l) in 1991. The Department of Ecology threshold for risk of seawater intrusion is 100 mg\l. Because of the proximity to Drayton Harbor, and because well #9 is completed below sea level, Blaine should regularly monitor chloride concentrations (see above listed provision).

Beneficial Use.

Municipal supply (domestic, industrial, commercial, etc.) is considered a beneficial use of water in accordance with RCW 90.54.020(1).

Public Welfare:

No detriment to public welfare could be identified with approval of this application.

Impairment to existing rights:

A records search indicates there are no water right permits, certificates, or claims within one half mile of well #9. There are well logs for five exempt domestic wells within one half mile of well #9. These well logs were filed by, Tehee (1/8/92), Burman (3/96), Miller (1/18/90), Olason (10/30/92), and Welch (1/10/92). All of these wells appear to be completed in the upper aquifer zones, separated from the lower aquifer, in which well #9 is completed, by a thirty-foot silty clay aquitard.

Well #9 is completed in a deep semi-confined to confined aquifer. The direction of groundwater flow below the well site is toward the southwest and Drayton Harbor. Any groundwater captured by well #9 currently discharges to Drayton Harbor, and possibly to the very lower reaches of Dakota Creek *(See Figure 1)*. In accordance with WAC 173-501-030, the closure of Dakota Creek does not include the lower reach that is tidally influenced. For Dakota Creek, the tidally influenced zone has been defined by Ecology as the reach at or below mean high sea level. This point (elevation 3.34 feet above MSL) is roughly 10,500 feet upstream of the mouth of Dakota Creek. Any stream reductions created within this tidally influenced reach are not subject to the stream closure.

If it can be shown that pumping well #9 has detrimental effects on senior right holders (including federal treaty rights or to the closed reach of Dakota Creek), it shall be the responsibility of the City of Blaine to mitigate for these losses or to cease pumping.

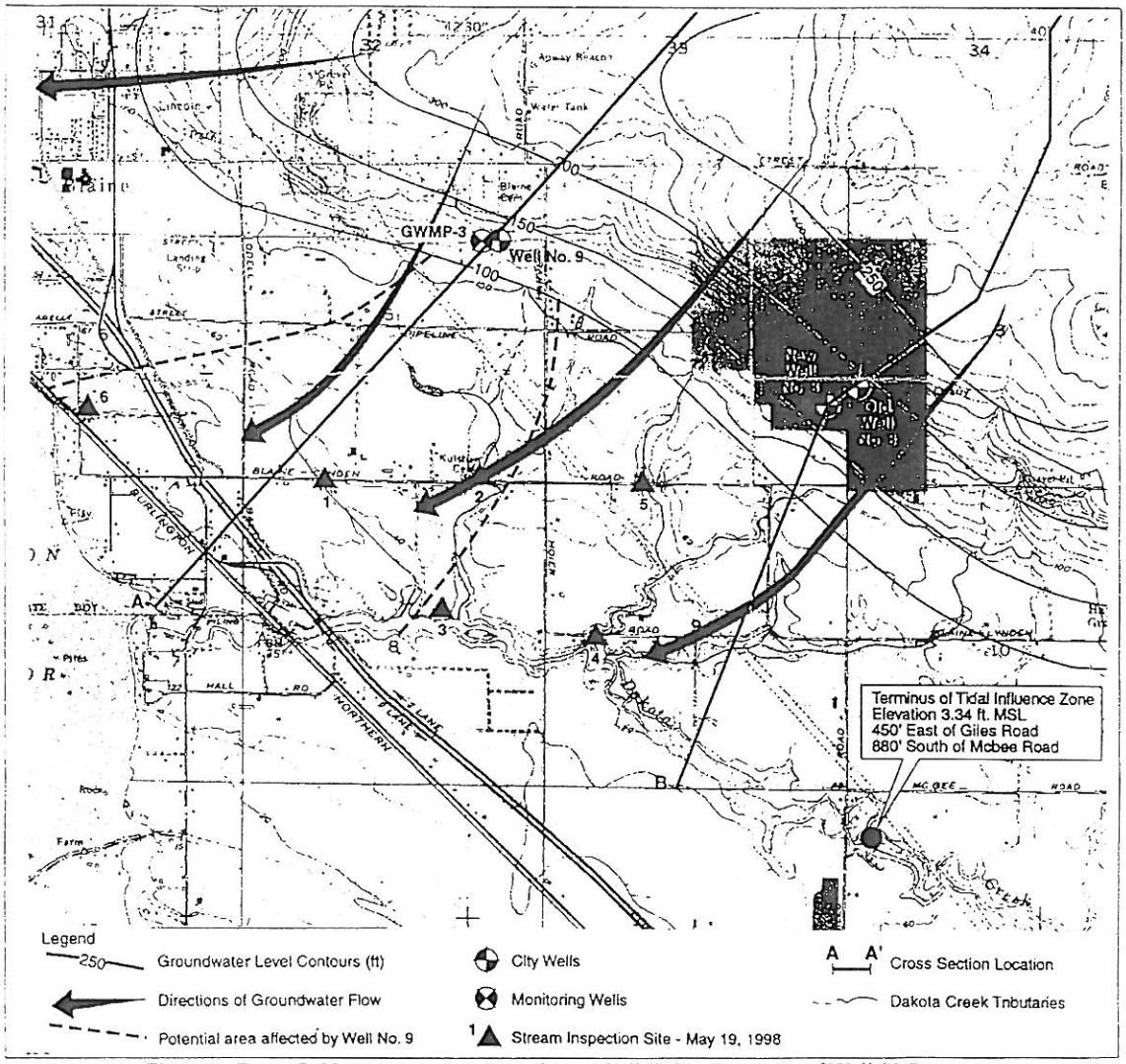

Figure 1 From Golder Associates – Pumping at Well #9/Replacement of Well #3 Report

Protestants:

This application for well #9 was protested by the Lummi Indian Business Council due to the potential impact to flows in Dakota Creek. As discussed above, pumping of well #9 will not capture groundwater destined to flow into the closed reach of Dakota Creek. Discussions with Jeremy Freimund, Lummi Nation hydrogeologist, led to concern about the potential impact to flows and fish habitat in the tributaries downstream of the closed reach of Dakota Creek. Although WAC 173-501 does not specifically close these tributaries, this report writer thought it would be prudent to investigate the potential impacts to fish habitat within this tidally influenced zone.

On May 19, 1998 this report writer, Larry Harmon (City of Blaine), Bryony Hansen (Golder Associates) and Pete Rittmueller (Cascade Environmental Services) visited five sites, on three tributaries, located within the tidally influenced zone of Dakota Creek. A sixth site, north of Dakota Creek was also visited (*See Figure 1 – Stream Inspection Sites).* The following provides a brief description of each site visited:

Site 1 – West Tributary

Site 1 is located at the outlet of a 36-inch diameter culvert that crosses beneath the Blaine-Lynden Road. The culvert appears impassable to fish due to length, slope and lack of water depth in the culvert. The culvert outfall is approximately 6 inches above the stream. An estimated flow of 0.1 cfs or less was exiting the culvert. This creek has virtually no fish habitat due to lack of pool depth and flow. A streamside resident (of many decades) said that the creek was normally dry for 2 to 3 months each summer.

Site 2 – Middle Tributary, Upstream

Site 2 is located on the Blaine-Lynden Road approximately 4,200 feet east of the Odell Road. A 48-inch corrugated metal culvert conveys the stream in a southerly direction beneath the road. The culvert appears impassable to fish due to length, slope and lack of water depth.

Discharge was estimated at 0.25 to 0.50 cfs. The stream meanders on clayey soil within a flat valley, bounded by steep 30-foot high sides. The area is used for cattle grazing.

Fish habitat is present, but is in poor condition due to extensive damage from cattle trampling. Fish habitat that is present consists primarily of medium-sized pools 1 to 2 feet deep. It is not likely that spawning fish use this site. During the winter months rearing fish may utilize this site.

Site 3 – Middle Tributary, at Confluence with Dakota Creek
Site 3 is located at the mouth of the Middle Tributary, in the tidal zone of Dakota Creek. Resident and anadromous fish have access to this site. Due to the heavy tidal influence, it is unlikely that pumping well #9 would affect this site. Based on communication with the adjacent property owner, this site contains water year-round.

Sites 4 & 5 – East Tributary
Both sites are located outside of the zone of potential impact from pumping well #9. This stream channel is heavily vegetated and within a 20 to 40 foot high steep-sided valley. Flow was estimated to be 1 cfs

Site 6 – Intermittent Stream, near Drayton Harbor
This is an extremely small, intermittent tributary of Drayton Harbor, located approximately 4,000 feet north of the mouth of Dakota Creek. This small channel was completely covered with grass. Flow was insignificant. This stream contains no useable fish habitat.

Site Visit Conclusions
The only potential fish habitat that may be impacted by pumping well #9 is the 2,600 foot reach between Sites 2 and 3 (Middle Tributary). Golder Associates estimates that pumping well #9 may cause loss of up to 10 gpm to occur between the upper and lower aquifer. Since the upper aquifer is confined and is separated from surface flows by approximately 44 feet of silt and gravel (between 54 to 98 feet bgs) and up to 34 feet of clay near surface, leakage of water from surface flows into the upper aquifer is likely to comprise only a small portion of the 10 gpm. However, without stream gauging information, it is difficult to quantify leakage from surface flows due to pumping at well #9. Ten gpm therefore provides a conservative estimate of stream losses from the upper reach of the Middle Tributary. This loss will be more than offset by the decommissioning of old well #3 as discussed below.

Assessment of Impacts Due to Replacing Old Well #3
Pumping of water (210 gpm) from the shallow (upper) aquifer that supplies old well #3 is likely to cause some stream flow losses from the East, Middle and West Tributaries. Old well #3 has been replaced by a new well completed in a deeper zone. Old well #3 is to be decommissioned prior to the operation of well #9. Due to the shallow depth of old well #3 in relation to well #9, the increase in stream flows due to replacing old well #3 will far outweigh (by several fold) any stream flow loss caused by the pumping of well #9.

CONCLUSION:

In accordance with RCW 90.03 and 90.44, I find there is water available for this beneficial appropriation from the source in question and that the appropriation as authorized will not impair existing rights or be detrimental to the public welfare. Therefore, a permit should be issued subject to the above-indicated provisions.

REPORT BY Buck Smith DATE June 26, 1998

Ground Water Contamination
Susceptibility Assessment Survey Form
Version 2.1

IMPORTANT! Please complete one form for each ground water source (well, wellfield, spring) used in your water system. Photocopy as necessary.

PART I: System Information

Well owner/manager : City of Blaine/William M. Duffy

Water system name : City of Blaine

County: Whatcom

Water system number: 07300 U Source number: 01

Well depth: 745 (ft.) (*From WFI form*)

Source name: Well #1

WA well identification tag number:___ ___ ___-___ ___ ___

X well not tagged

Number of connections: 1385 Population served: 3,170

Township: 40 N Range: 01 E

Section: 31 1/4 1/4 Section: SE/SE

Latitude/longitude (if available): 48° 59' 03" / 122° 40' 59"

How was lat./long. determined?

___ global positioning device ___ survey X topographic map
___other: ___

* Please refer to Assistance Packet for details and explanations of all questions in Parts II through V.

PART II: Well Construction and Source Information

1) Date well originally constructed: 00 / 00 /29 month/day/year

last reconstruction: ___ / ___ /___ month/day/year

___ information unavailable

2) Well driller: Jannsen

Address (?)

___ well driller unknown

3) Type of well:

___Drilled: ___ rotary ___ bored ___ cable (percussion) ___ Dug

___ Other: ___ spring(s) ___ lateral collector (Ranney)

___ driven ___ jetted ___ other: _____

Additional comments: Type of well not indicated on report.

4) Well report available? X YES (attach copy to form) ___ NO

If no well log is available, please attach any other records documenting well construction; e.g. boring logs, "as built" sheets, engineering reports, well reconstruction logs.

5) Average pumping rate: 500 (gallons/min)

Source of information: WFI

If not documented, how was pumping rate determined? _____

___ Pumping rate unknown

6) Is this source treated?

If so, what type of treatment:

X disinfection ___ filtration ___ carbon filter ___ air stripper ___ other

Purpose of treatment (describe materials to be removed or controlled by treatment):

Source chlorinated prior to customer delivery to prevent possible bacterial contamination.

7) If source is chlorinated, is a chlorine residual maintained: X YES ___ NO

Residual level: .1 to .4 mg/L (*At the point closest to the source.*)

PART III: Hydrogeologic Information

1) Depth to top of open interval: [check one]

___ < 20 ft ___ 20–50 ft ___ 50–100 ft ___ 100–200 ft ___ >200 ft

_X_ information unavailable (*'< ' means less than; '> ' means greater than*)

2) Depth to ground water (static water level):

___ < 20 ft ___ 20–50 ft ___ 50–100 ft ___ > 100 ft

___ flowing well/spring (artesian)

How was water level determined?

___ well log _X_ other: weekly probed static level

___ depth to ground water unknown

3) If source is a flowing well or spring, what is the confining pressure:

_____ psi (pounds per square inch)
or
_____ feet above wellhead

4) If source is a flowing well or spring, is there a surface impoundment, reservoir, or catchment associated with this source: ___ YES ___ NO

5) Wellhead elevation (height above mean sea level): 177 (ft)

How was elevation determined? ___ topographic map _X_ Drilling/Well Log ___ altimeter

___ other: _____

___ information unavailable

6) Confining layers: (This can be completed only for those sources with a drilling log, well log or geologic report describing subsurface conditions. Please refer to assistance package for example.)

_X_ evidence of a confining layer in well log

___ no evidence of a confining layer in well log

If there is evidence of a confining layer, is the depth to ground water more than 20 feet above the ~~top~~ bottom of the ~~open interval~~? lowest confining layer _X_ YES ___ NO

___ information unavailable

7) Sanitary setback:

___ < 100 ft* ___ 100-120 ft ___ 120-200 ft X > 200 ft
* if less than 100 ft describe the site conditions:

_____

_____

_____

_____

8) Wellhead construction:

X wellhead enclosed in a wellhouse

X controlled access (describe): Limited access road with 24-hour locked gates.

_____

___ other uses for wellhouse (describe): _____

_____

___ no wellhead control

9) Surface seal:

___ 18 ft

___ < 18 ft (no Department of Ecology approval) ('< ' *means less than*)

___ < 18 ft (Approved by Ecology, include documentation) ('< ' *means less than*)

___ > 18 ft ('> ' *means greater than*)

X depth of seal unknown

___ no surface seal

10) Annual rainfall (inches per year):

___ < 10 in/yr ___ 10-25 in/yr X > 25 in/yr

PART IV: Mapping Your Ground Water Resource

1) Annual volume of water pumped: 121,239,000 (gallons)

How was this determined?

___ meter

X estimated: ___ pumping rate (Hours ran x well capacity as W.F.I.)

___ pump capacity (_____)

___ other: _____

2) "Calculated Fixed Radius" estimate of ground water movement:
(see Instruction Packet)

6 month ground water travel time : _____(ft)

1 year ground water travel time : _____(ft)

5 year ground water travel time: _____(ft)

10 year ground water travel time: _____(ft)

Information available on length of screened/open interval?

___ YES X NO

Length of screened/open interval: _____(ft)

3) Is there a river, lake, pond, stream, or other obvious surface water body within the 6 month time of travel boundary? ___ YES ___ NO (mark and identify on map).

4) Is there a stormwater and/or wastewater facility, treatment lagoon, or holding pond located within the 6 month time of travel boundary? ___ YES ___ NO (mark and identify on map).

Comments: There is a reservoir located in the watershed area, but we are unable to establish if it is within the six-month time of travel because of lack of open interval measurements.

PART V: Assessment of Water Quality

1) Regional sources of risk to ground water:

Please indicate if any of the following are present within a circular area around your water source having a radius up to and including the five year ground water travel time:

	6 month	1 year	5 year	unknown
likely pesticide application	____	____	____	____
stormwater injection wells	____	____	____	____
other injection wells	____	____	____	____
abandoned ground water well	____	____	____	____
landfills, dumps, disposal areas	____	____	____	____
known hazardous materials clean-up site	____	____	____	____
water system(s) with known quality problems	____	____	____	____
population density > 1 house/acre	____	____	____	____
residences commonly have septic tanks	____	____	____	____
Wastewater treatment lagoons	____	____	____	____
sites used for land application of waste	____	____	____	____

Mark and identify on map any of the risks listed above which are located within the 6 month time of travel boundary? (*Please include a map of the wellhead and time of travel areas with this form. Please locate and mark any of the following.*)

If other recorded or potential sources of ground water contamination exist within the ten year time of travel circular zone around your water supply, please describe:

Information on this well does not include the length of open interval; therefore, a specific CFR couldn't be determined. However, data on other wells within close proximity to this well does include the necessary information to determine CFRs for them. Would it be possible to utilize this information to develop a general CFR for this well?

2) Source specific water quality records:

Please indicate the occurrence of any test results since 1986 that meet the following conditions: (Unless listed on assessment, MCLs are listed in assistance package.)

A. Nitrate: (Nitrate MCL = 10 mg/l)	YES	NO
Results greater than MCL	___	X
< 2 mg/liter nitrate	X	___
2-5 mg/liter nitrate	___	X
> 5 mg/liter nitrate	___	X
___ Nitrate sampling records unavailable		

B. VOCs: (VOC detection level 0.5 ug/l or 0.0005 mg/l.)	YES	NO
Results greater than MCL or SAL	___	X
VOCs detected at least once	___	X
VOCs never detected	X	___
___ VOC sampling records unavailable		

C. EDB/DBCP:	YES	NO
(EDB MCL = 0.05 ug/l or 0.00005 mg/l. DBCP MCL = 0.2 ug/l or 0.0002 mg/l.)		
EDB/DBCP detected below MCL at least once	___	___
EDB/DBCP detected above MCL at least once	___	___
EDB/DBCP never detected	___	___
___ EDB/DBCP tests required but not yet completed		
___ EDB/DBCP tests not required		

D. Other SOCs (Pesticides):	YES	NO
Other SOCs detected (pesticides and other synthetic organic chemicals)	___	___
___ Other SOC tests performed but none detected (list test methods in comments		
X Other SOC tests not performed		

If any SOCs in addition to EDB/DBCP were detected, please identify and date. If other SOC tests were performed, but no SOCs detected, list test methods here: _____

_____

_____

_____

E. Bacterial contamination:

	YES	NO
Any bacterial detection(s) in the past 3 years in samples taken from the source (not distribution sampling records).	___	___
Has source (in past 3 years) had a bacteriological contamination problem found in distribution samples that was attributed to the source.	___	X

___ Source sampling records for bacteria unavailable

Part VI: Geographic or Hydrologic Factors Contributing to a Non-Circular Zone of Contribution

The following questions will help identify those ground water systems which may not be accurately represented by the calculated fixed radius (CFR) method described in Part IV. For these sources, the CFR areas should be used as a preliminary delineation of the critical time of travel zones for that source. As a system develops its Wellhead Protection Plan for theses sources, a more detailed delineation method should be considered.

1) Is there evidence of obvious hydrologic boundaries within the 10 year time of travel zone of the CFR? (Does the largest circle extend over a stream, river, lake, up a steep hillside, and/or over a mountain or ridge?)

X YES ___ NO

Describe with references to map produced in Part IV:

Pond

2) Aquifer Material:

A) Does the drilling log, well log or other geologic/engineering reports identify that the well is located in an area where the underground conditions are identified as fractured rock and/or basalt terrain?

___ YES X NO

B) Does the drilling log, well log or other geologic/engineering reports indicate that the well is located in an area where the underground conditions are primarily identified as coarse sand and gravel?

___ YES X NO

* HPC sample on 5/19/94 indicated a 1/ml plate count.

3) Is the source located in an aquifer with a high horizontal flow rate? (These can include sources located on flood plains of large rivers, artesian wells with high water pressure, and/or shallow flowing wells and springs.)

__ YES X NO

4) Are there other high capacity wells (agricultural, municipal and/or industrial) located within the CFRs?

a) Presence of ground water extraction wells removing more than approximately 500 gal/min within...

	YES	NO	unknown
< 6 month travel time	__	X	__
6 month–1 year travel time	__	X	__
1–5 year travel time	__	X	__
5–10 year travel time	__	X	__

b) Presence of ground water recharge wells (dry wells) or heavy irrigation within...

	YES	NO	unknown
< 1 year travel time	__	X	__
1–5 year travel time	__	X	__
5–10 year travel time	__	X	__

Please identify or describe additional hydrologic or geographic conditions that you believe may affect the shape of the zone of contribution for this source. Where possible, reference them to locations on the map produced in Part IV.

Suggestions and Comments

Did you attend one of the susceptibility workshops? X YES ___ NO

Did you find it useful? X YES ___ NO

Did you seek outside assistance to complete the assessment? X YES ___ NO

This form and instruction packet are still in the process of development. Your comments, suggestions and questions will help us upgrade and improve this assessment form. If you found particular sections confusing or problematic please let us know. How could this susceptibility assessment be improved or made clearer? Did the instruction package help you find the information needed to complete the assessment? How much time did it take you to complete the form? Were you able to complete the assessment without additional/outside expertise? Do you feel the assessment was valuable as a learning experience? Any other comments or constructive criticisms you have would be appreciated.

43'30"
31
43'30"
43'
32
Gravel Pit
E
STREET
WT
Well
Lincoln Park
WT
100
300
ROAD
5
BM 48
BM 61
H
STREET
Blaine
543
Municipal Airport
HARRISON
RD
BM 59
1
BOBLETT
STREET
BOBLETT
ROAD
BM 66
CEDAR
ST
Skallman Park
MITCHELL
ABELIA 61
STREET
5
6
PIPELINE
60
ODELL
BM 28
40
Mud
Substation
HUGHES
AVE
ROAD
Athletic Field
DRAYTON
548
40
BM 35
8
7
HARBOR
22
HALL
RD
PORTAL
Mud

NER: Name City of Blaine Address 1200 Yew Avenue, Blaine, WA 98230

CATION OF WELL: County Whatcom SE ¼ SE ¼ Sec. 31 T. 41 N. R. 1 E W.M.

distance from section or subdivision corner 400' S and 125 W from the south 1/16 corner between Sec 31 &

POSED USE: Domestic ☐ Industrial ☐ Municipal ☒
Irrigation ☐ Test Well ☐ Other ☐

PE OF WORK: Owner's number of well (if more than one)....
New well ☒ Method: Dug ☐ Bored ☐
Deepened ☐ Cable ☐ Driven ☐
Reconditioned ☐ Rotary ☐ Jetted ☐

MENSIONS: Diameter of well 12 inches.
ed 200 ft. Depth of completed well 200 ft.

NSTRUCTION DETAILS:

ing installed: 12 " Diam. from 0 ft. to 176 ft.
Threaded ☐ ____ " Diam. from ____ ft. to ____ ft.
Welded ☐ ____ " Diam. from ____ ft. to ____ ft.

forations: Yes ☐ No ☐
Type of perforator used
SIZE of perforations ____ in. by ____ in.
____ perforations from ____ ft. to ____ ft.
____ perforations from ____ ft. to ____ ft.
____ perforations from ____ ft. to ____ ft.

eens: Yes ☒ No ☐
Manufacturer's Name UCI Johnson
Type stainless Model No.
Diam. 12 Slot size 20 from 174 ft. to 185 ft.
Diam. ____ Slot size 25 from 185 ft. to 200 ft.

vel packed: Yes ☐ No ☐ Size of gravel: 11
ravel placed from ____ ft. to ____ ft.

rface seal: Yes ☒ No ☐ To what depth? 11 ft.
Material used in seal concrete
Did any strata contain unusable water? Yes ☐ No ☐
Type of water? ____ Depth of strata
Method of sealing strata off

JMP: Manufacturer's Name Gould
Type: vertical guideline H.P. 30

ATER LEVELS: Land-surface elevation above mean sea level.... 196 ft.
el 93'6" ft. below top of well Date 10/14/69
pressure ____ lbs. per square inch Date
Artesian water is controlled by (Cap, valve, etc.)

ELL TESTS: Drawdown is amount water level is lowered below static level
mp test made? Yes ☒ No ☐ If yes, by whom? driller
00 gal./min. with 53 ft. drawdown after 2 hrs.
50 " 70 " 3
" "

data (time taken as zero when pump turned off) (water level ured from well top to water level)

Water Level	Time	Water Level	Time	Water Level
105	30 min	98		
100	45 min	98		
99	50 min	98		

est October 21, 1969
____ gal./min. with ____ ft. drawdown after ____ hrs.
flow ____ g.p.m. Date
ture of water ____ Was a chemical analysis made? Yes ☐ No ☒

(10) WELL LOG:

Formation: *Describe by color, character, size of material and structure, and show thickness of aquifers and the kind and nature of the material in each stratum penetrated, with at least one entry for each change of formation.*

MATERIAL	FROM	TO
Top soil	0	3
Clay & gravel	3	13
Blue clay & boulders	13	18
Blue clay & boulders	18	28
Blue clay	28	72
Sandy blue clay & gravel	72	80
Sandy clay & gravel	80	91
Dirty sand & gravel - water	91	108
Clay coated gravel	108	111
Gray clay	111	135
Sandy clay	136	163
Fine sand & gravel	163	167
Fine sticky sand & clay	167	170
Fine sand & clay	170	174
Coarse & fine sand & gravel	174	177
Fine hard-packed sand & clay	177	179
Coated gravel	179	183
Coarse & fine sand & clay coated gravel	183	190
Clay-coated gravel	190	220

COPY

Work started September 3 19 69 Completed ____ 19 ____

WELL DRILLER'S STATEMENT:

This well was drilled under my jurisdiction and this report is true to the best of my knowledge and belief.

NAME Richardson Well Drilling Co. Inc.
(Person, firm, or corporation) (Type or print)

Address P.O. Box 2266, Tacoma, WA 98444

[Signed] ____ (Well Driller)

License No. 223 02 6500 Date June 29, 1970

(USE ADDITIONAL SHEETS IF NECESSARY)

Ground Water Contamination
Susceptibility Assessment Survey Form
Version 2.1

IMPORTANT! Please complete one form for each ground water source (well, wellfield, spring) used in your water system. Photocopy as necessary.

PART I: System Information

Well owner/manager : City of Blaine/William M. Duffy

Water system name : City of Blaine

County: Whatcom

Water system number: 07300 U Source number: 02

Well depth: 641 (ft.) (*From WFI form*)

Source name: Well #2

WA well identification tag number:___ ___ ___-___ ___ ___

X well not tagged

Number of connections: 1385 Population served: 3,170

Township: 40 N Range: 01 E

Section: 31 1/4 1/4 Section: SE/SE

Latitude/longitude (if available): 48° 59' 06" / 122° 41' 02"

How was lat./long. determined?

_____ global positioning device _____ survey X topographic map
____other: _____

* Please refer to Assistance Packet for details and explanations of all questions in Parts II through V.

PART II: Well Construction and Source Information

1) Date well originally constructed: 4 / 11 / 63 month/day/year

last reconstruction: 4 / 14 / 92 month/day/year

_____ information unavailable

2) Well driller: G. A. Benzon

Route 3 Box 107, Ferndale, WA

Reconstructed on 4/14/92 by Holt Drilling, Puyallup, WA

___ well driller unknown

3) Type of well:

X Drilled: ___ rotary ___ bored X cable (percussion) ___ Dug

___ Other: ___ spring(s) ___ lateral collector (Ranney)

___ driven ___ jetted ___ other: _____

Additional comments: _____

_____

4) Well report available? X YES (attach copy to form) ___ NO

If no well log is available, please attach any other records documenting well construction; e.g. boring logs, "as built" sheets, engineering reports, well reconstruction logs.

5) Average pumping rate: 230 (gallons/min)

Source of information: WFI

If not documented, how was pumping rate determined? _____

_____

___ Pumping rate unknown

6) Is this source treated?

If so, what type of treatment:

X disinfection ___ filtration ___ carbon filter ___ air stripper ___ other

Purpose of treatment (describe materials to be removed or controlled by treatment):

Source chlorinated prior to customer delivery to prevent possible backterial contamination.

7) If source is chlorinated, is a chlorine residual maintained: X YES ___ NO

Residual level: .1 to .4 mg/L (*At the point closest to the source.*)

7) Sanitary setback:

___ < 100 ft* ___ 100-120 ft ___ 120-200 ft X > 200 ft
* if less than 100 ft describe the site conditions:

8) Wellhead construction:

___ wellhead enclosed in a wellhouse

X controlled access (describe): Locked gate access in watershed area.

___ other uses for wellhouse (describe): _____

___ no wellhead control

9) Surface seal:

___ 18 ft

___ < 18 ft (no Department of Ecology approval) ('< ' *means less than*)

___ < 18 ft (Approved by Ecology, include documentation) ('< ' *means less than*)

___ > 18 ft ('> ' *means greater than*)

X depth of seal unknown

___ no surface seal

10) Annual rainfall (inches per year):

___ < 10 in/yr ___ 10-25 in/yr X > 25 in/yr

PART IV: Mapping Your Ground Water Resource

1) Annual volume of water pumped: 111,872,460 (gallons)

How was this determined?

___ meter

___ estimated: X pumping rate (Hours ran x well capacity)

___ pump capacity (_____)

___ other: _____

2) "Calculated Fixed Radius" estimate of ground water movement:
(see Instruction Packet)

6 month ground water travel time : 620 (ft)

1 year ground water travel time : 880 (ft)

5 year ground water travel time: 1,970 (ft)

10 year ground water travel time: 2,780 (ft)

Information available on length of screened/open interval?

X YES ___ NO

Length of screened/open interval: 36 (ft)

3) Is there a river, lake, pond, stream, or other obvious surface water body within the 6 month time of travel boundary? X YES ___ NO (mark and identify on map).

4) Is there a stormwater and/or wastewater facility, treatment lagoon, or holding pond located within the 6 month time of travel boundary? ___ YES X NO (mark and identify on map).

Comments: There is a reservoir located in the watershed area, but we are unable to establish if it is within the six-month time of travel because of lack of open interval measurements.

PART V: Assessment of Water Quality

1) Regional sources of risk to ground water:

Please indicate if any of the following are present within a circular area around your water source having a radius up to and including the five year ground water travel time:

	6 month	1 year	5 year	unknown	
likely pesticide application				X	
stormwater injection wells					None
other injection wells					None
abandoned ground water well	X				
landfills, dumps, disposal areas					None
known hazardous materials clean-up site					None
water system(s) with known quality problems					None
population density > 1 house/acre					None
residences commonly have septic tanks			X		
Wastewater treatment lagoons					None
sites used for land application of waste					None

Mark and identify on map any of the risks listed above which are located within the 6 month time of travel boundary? (*Please include a map of the wellhead and time of travel areas with this form. Please locate and mark any of the following.*)

If other recorded or potential sources of ground water contamination exist within the ten year time of travel circular zone around your water supply, please describe:

2) Source specific water quality records:

Please indicate the occurrence of any test results since 1986 that meet the following conditions: (Unless listed on assessment, MCLs are listed in assistance package.)

A. Nitrate: (Nitrate MCL = 10 mg/l)	YES	NO
Results greater than MCL	___	X
< 2 mg/liter nitrate	X	___
2–5 mg/liter nitrate	___	X
> 5 mg/liter nitrate	___	X

___ Nitrate sampling records unavailable

B. VOCs: (VOC detection level 0.5 ug/l or 0.0005 mg/l.)	YES	NO
Results greater than MCL or SAL	___	X
VOCs detected at least once	___	X
VOCs never detected	X	___

___ VOC sampling records unavailable

C. EDB/DBCP:	YES	NO
(EDB MCL = 0.05 ug/l or 0.00005 mg/l. DBCP MCL = 0.2 ug/l or 0.0002 mg/l.)		
EDB/DBCP detected below MCL at least once	___	___
EDB/DBCP detected above MCL at least once	___	___
EDB/DBCP never detected	___	___

___ EDB/DBCP tests required but not yet completed

X EDB/DBCP tests not required

D. Other SOCs (Pesticides):	YES	NO
Other SOCs detected	___	___
(pesticides and other synthetic organic chemicals)		

___ Other SOC tests performed but none detected
(list test methods in comments

X Other SOC tests not performed

If any SOCs in addition to EDB/DBCP were detected, please identify and date. If other SOC tests were performed, but no SOCs detected, list test methods here: _____

_____

_____

_____

E. Bacterial contamination:

	YES	NO
Any bacterial detection(s) in the past 3 years in samples taken from the source (not distribution sampling records).	___	X *
Has source (in past 3 years) had a bacteriological contamination problem found in distribution samples that was attributed to the source.	___	X

___ Source sampling records for bacteria unavailable

Part VI: Geographic or Hydrologic Factors Contributing to a Non-Circular Zone of Contribution

The following questions will help identify those ground water systems which may not be accurately represented by the calculated fixed radius (CFR) method described in Part IV. For these sources, the CFR areas should be used as a preliminary delineation of the critical time of travel zones for that source. As a system develops its Wellhead Protection Plan for theses sources, a more detailed delineation method should be considered.

1) Is there evidence of obvious hydrologic boundaries within the 10 year time of travel zone of the CFR? (Does the largest circle extend over a stream, river, lake, up a steep hillside, and/or over a mountain or ridge?)

X YES ___ NO

Describe with references to map produced in Part IV:

_____

_____

2) Aquifer Material:

A) Does the drilling log, well log or other geologic/engineering reports identify that the well is located in an area where the underground conditions are identified as fractured rock and/or basalt terrain?

___ YES X NO

B) Does the drilling log, well log or other geologic/engineering reports indicate that the well is located in an area where the underground conditions are primarily identified as coarse sand and gravel?

X YES ___ NO

*Note: Based on bacti and HPC sampling done on 5/19/94.

3) Is the source located in an aquifer with a high horizontal flow rate? (These can include sources located on flood plains of large rivers, artesian wells with high water pressure, and/or shallow flowing wells and springs.)

___ YES X NO

4) Are there other high capacity wells (agricultural, municipal and/or industrial) located within the CFRs?

a) Presence of ground water extraction wells removing more than approximately 500 gal/min within...

	YES	NO	unknown
< 6 month travel time	___	X	___
6 month–1 year travel time	___	X	___
1–5 year travel time	___	___	X
5–10 year travel time	___	___	X

b) Presence of ground water recharge wells (dry wells) or heavy irrigation within...

	YES	NO	unknown
< 1 year travel time	___	X	___
1–5 year travel time	___	___	X
5–10 year travel time	___	___	X

Please identify or describe additional hydrologic or geographic conditions that you believe may affect the shape of the zone of contribution for this source. Where possible, reference them to locations on the map produced in Part IV.

Suggestions and Comments

Did you attend one of the susceptibility workshops? X YES ___ NO

Did you find it useful? X YES ___ NO

Did you seek outside assistance to complete the assessment? X YES ___ NO

This form and instruction packet are still in the process of development. Your comments, suggestions and questions will help us upgrade and improve this assessment form. If you found particular sections confusing or problematic please let us know. How could this susceptibility assessment be improved or made clearer? Did the instruction package help you find the information needed to complete the assessment? How much time did it take you to complete the form? Were you able to complete the assessment without additional/outside expertise? Do you feel the assessment was valuable as a learning experience? Any other comments or constructive criticisms you have would be appreciated.

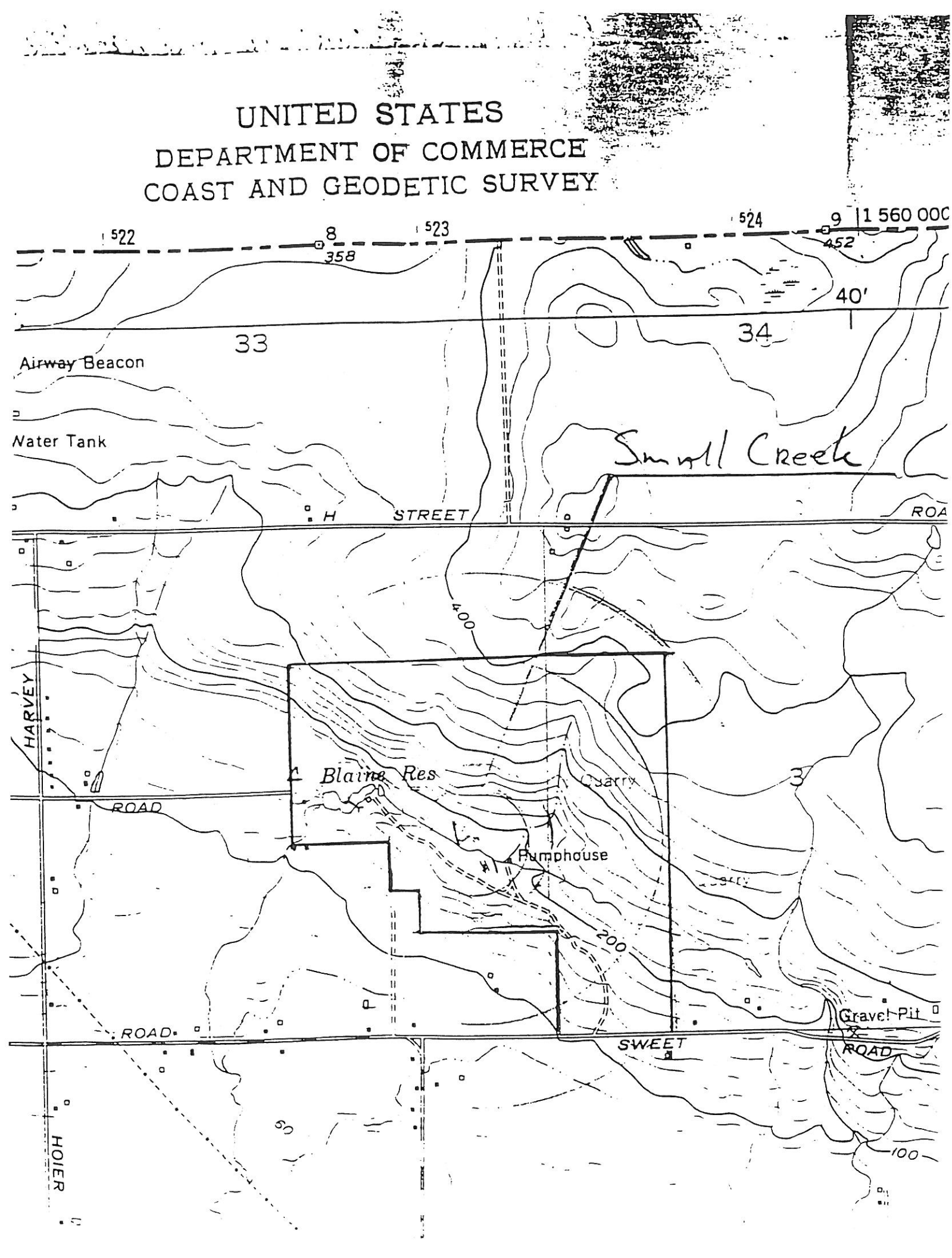
UNITED STATES
DEPARTMENT OF COMMERCE
COAST AND GEODETIC SURVEY
522
8
523
524
9
1 560 000
358
452
40'
33
34
Airway Beacon
Water Tank
Small Creek
H STREET
ROA
400
HARVEY
Blaine Res
Quarry
3
ROAD
Pumphouse
200
Gravel Pit
ROAD
SWEET
ROAD
HOIER
50
100

5	Ground level
6	Yellow Clay & gravel
10" casing →	Blue Clay
72	
10" casing 4 slips-10' Water 82	Coarse Gravel & sand - water raised to grou
86	Clay & Gravel
98	Hard clay some Gravel
	clay and gravel
116	
125	Hard packed Gravel - posibility of water
134	Gravel and clay
151	Blue Clay
10" casing 4 slips-5' ea. 159	Coarse gravel and sand water possi
10" casing - 3 slips -5'	Coarse gravel hard packed
173	
178	Clay & gravel
10" casing - 5 slips-5' ea. 183	Coarse gravel & Sand - Water ~~level down~~
189	Fine gravel Sand & Gravel.
8" casing →	Gravel & Clay
215	
219	Loose gravel
225	Hard Packed Gravel and clay
	Sticky Blue Clay

400

Sticky clay with trace sand & gravel

456

477

6" CASING HAS BEEN PULLED

Clay ... streaks of Gravel

538

Sandy clay

LOCATION ORIGINAL SCREEN

642

Fill ... sand

683

... sand clay mixed

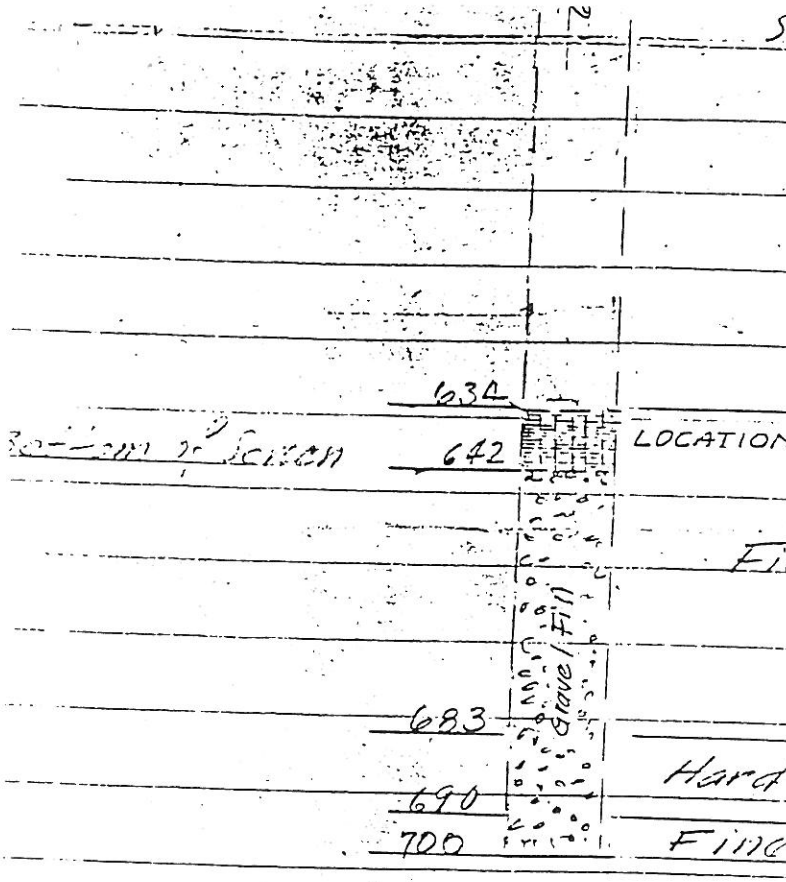
Sandy Clay
634
642
LOCATION ORIGINAL SCREEN
Fine sand and water
Gravel Fill
683
690
Hard Packed sand and clay mixed
700
Fine Silty Quick Sand

Well No. 2?

Ground Water Contamination
Susceptibility Assessment Survey Form
Version 2.1

IMPORTANT! Please complete one form for each ground water source (well, wellfield, spring) used in your water system. Photocopy as necessary.

PART I: System Information

Well owner/manager : City of Blaine/William M. Duffy

Water system name : City of Blaine

County: Whatcom

Water system number: 07300 U Source number: 03

Well depth: 75 (ft.) (*From WFI form*)

Source name: Well #3

WA well identification tag number: ___ ___ ___-___ ___ ___

X well not tagged

Number of connections: 1385 Population served: 3,170

Township: 40 N Range: 01 E

Section: 03 1/4 1/4 Section: NW/SW

Latitude/longitude (if available): 48° 59' 06" / 122° 40' 47"

How was lat./long. determined?

___ global positioning device ___ survey X topographic map
___other: ___

* Please refer to Assistance Packet for details and explanations of all questions in Parts II through V.

PART II: Well Construction and Source Information

1) Date well originally constructed: 3 / 09 / 59 month/day/year

last reconstruction: ___ / ___ /___ month/day/year

___ information unavailable

2) Well driller: G.A. Bezona
Ferndale, WA

___ well driller unknown

3) Type of well:

___Drilled: ___ rotary ___ bored ___ cable (percussion) __ Dug

___ Other: ___ spring(s) ___ lateral collector (Ranney)

___ driven ___ jetted ___ other: _____

Additional comments: _____

4) Well report available? X YES (attach copy to form) ___ NO

If no well log is available, please attach any other records documenting well construction; e.g. boring logs, "as built" sheets, engineering reports, well reconstruction logs.

5) Average pumping rate: 265 (gallons/min)

Source of information: WFI

If not documented, how was pumping rate determined? _____

__ Pumping rate unknown

6) Is this source treated?

If so, what type of treatment:

X disinfection ___ filtration ___ carbon filter ___ air stripper ___ other

Purpose of treatment (describe materials to be removed or controlled by treatment):

To control possible bacterial contamination.

7) If source is chlorinated, is a chlorine residual maintained: X YES ___ NO

Residual level: .1 to .4 mg/L (*At the point closest to the source.*)

PART III: Hydrogeologic Information

1) Depth to top of open interval: [check one]

___ < 20 ft ___ 20-50 ft X 50-100 ft ___ 100-200 ft ___ >200 ft

___ information unavailable (*'< ' means less than; '> ' means greater than*)

2) Depth to ground water (static water level):

___ < 20 ft X 20-50 ft ___ 50-100 ft ___ > 100 ft

___ flowing well/spring (artesian)

How was water level determined?

X well log ___ other: _____

___ depth to ground water unknown

3) If source is a flowing well or spring, what is the confining pressure:

_____ psi (pounds per square inch)
or
_____ feet above wellhead

4) If source is a flowing well or spring, is there a surface impoundment, reservoir, or catchment associated with this source: ___ YES X NO

5) Wellhead elevation (height above mean sea level): 200 (ft)

How was elevation determined? X topographic map ___ Drilling/Well Log ___ altimeter

___ other: _____

___ information unavailable

6) Confining layers: (This can be completed only for those sources with a drilling log, well log or geologic report describing subsurface conditions. Please refer to assistance package for example.)

___ evidence of a confining layer in well log

X no evidence of a confining layer in well log

If there is evidence of a confining layer, is the depth to ground water more than 20 feet above the ~~top~~ bottom of the ~~open interval~~ lowest confining layer? ___ YES X NO (?)

___ information unavailable

7) Sanitary setback:

___ < 100 ft* ___ 100-120 ft ___ 120-200 ft X > 200 ft
* if less than 100 ft describe the site conditions:

8) Wellhead construction:

X wellhead enclosed in a wellhouse

X controlled access (describe): Limited access road with 24-hour locked gate.

___ other uses for wellhouse (describe): _____

___ no wellhead control

9) Surface seal:

___ 18 ft

___ < 18 ft (no Department of Ecology approval) ('< ' *means less than*)

___ < 18 ft (Approved by Ecology, include documentation) ('< ' *means less than*)

___ > 18 ft ('> ' *means greater than*)

X depth of seal unknown

___ no surface seal

10) Annual rainfall (inches per year):

___ < 10 in/yr ___ 10-25 in/yr X > 25 in/yr

PART IV: Mapping Your Ground Water Resource

1) Annual volume of water pumped: 116,206,740 (gallons)

How was this determined?

___ meter

X estimated: X pumping rate (Operating hours x source capacity)

___ pump capacity (_____) (?)

___ other: _____

2) "Calculated Fixed Radius" estimate of ground water movement:
(see Instruction Packet)

6 month ground water travel time : 980 (ft)

1 year ground water travel time : 1,390 (ft)

5 year ground water travel time: 3,110 (ft)

10 year ground water travel time: 4,400 (ft)

Information available on length of screened/open interval?

X YES ___ NO

Length of screened/open interval: 10 (ft)

3) Is there a river, lake, pond, stream, or other obvious surface water body within the 6 month time of travel boundary? X YES ___ NO (mark and identify on map).

4) Is there a stormwater and/or wastewater facility, treatment lagoon, or holding pond located within the 6 month time of travel boundary? ___ YES X NO (mark and identify on map).

Comments: There is a reservoir located in the watershed area, but we are unable to establish if it is within the six-month time of travel because of lack of open interval measurements.

PART V: Assessment of Water Quality

1) Regional sources of risk to ground water:

Please indicate if any of the following are present within a circular area around your water source having a radius up to and including the five year ground water travel time:

	6 month	1 year	5 year	unknown	
likely pesticide application				X	
stormwater injection wells				X	
other injection wells				X	
abandoned ground water well	X				
landfills, dumps, disposal areas				X	
known hazardous materials clean-up site				X	
water system(s) with known quality problems					None
population density > 1 house/acre					None
residences commonly have septic tanks		X			
Wastewater treatment lagoons					None
sites used for land application of waste					None

Mark and identify on map any of the risks listed above which are located within the 6 month time of travel boundary? (*Please include a map of the wellhead and time of travel areas with this form. Please locate and mark any of the following.*)

If other recorded or potential sources of ground water contamination exist within the ten year time of travel circular zone around your water supply, please describe:

2) Source specific water quality records:

Please indicate the occurrence of any test results since 1986 that meet the following conditions: (Unless listed on assessment, MCLs are listed in assistance package.)

A. Nitrate: (Nitrate MCL = 10 mg/l)	YES	NO
Results greater than MCL	___	X
< 2 mg/liter nitrate	X	___
2–5 mg/liter nitrate	___	X
> 5 mg/liter nitrate	___	X
___ Nitrate sampling records unavailable		

B. VOCs: (VOC detection level 0.5 ug/l or 0.0005 mg/l.)	YES	NO
Results greater than MCL or SAL	___	X
VOCs detected at least once	___	X
VOCs never detected	X	___
___ VOC sampling records unavailable		

C. EDB/DBCP:	YES	NO
(EDB MCL = 0.05 ug/l or 0.00005 mg/l. DBCP MCL = 0.2 ug/l or 0.0002 mg/l.)		
EDB/DBCP detected below MCL at least once	___	___
EDB/DBCP detected above MCL at least once	___	___
EDB/DBCP never detected	___	___
___ EDB/DBCP tests required but not yet completed		
X EDB/DBCP tests not required		

D. Other SOCs (Pesticides):	YES	NO
Other SOCs detected	___	___
(pesticides and other synthetic organic chemicals)		
___ Other SOC tests performed but none detected		
(list test methods in comments		
X Other SOC tests not performed		

If any SOCs in addition to EDB/DBCP were detected, please identify and date. If other SOC tests were performed, but no SOCs detected, list test methods here: _____

_____

_____

_____

E. Bacterial contamination:

	YES	NO
Any bacterial detection(s) in the past 3 years in samples taken from the source (not distribution sampling records).	___	X *
Has source (in past 3 years) had a bacteriological contamination problem found in distribution samples that was attributed to the source.	___	X

___ Source sampling records for bacteria unavailable

Part VI: Geographic or Hydrologic Factors Contributing to a Non-Circular Zone of Contribution

The following questions will help identify those ground water systems which may not be accurately represented by the calculated fixed radius (CFR) method described in Part IV. For these sources, the CFR areas should be used as a preliminary delineation of the critical time of travel zones for that source. As a system develops its Wellhead Protection Plan for theses sources, a more detailed delineation method should be considered.

1) Is there evidence of obvious hydrologic boundaries within the 10 year time of travel zone of the CFR? (Does the largest circle extend over a stream, river, lake, up a steep hillside, and/or over a mountain or ridge?)

X YES ___ NO

Describe with references to map produced in Part IV:

Pond and small stream

2) Aquifer Material:

A) Does the drilling log, well log or other geologic/engineering reports identify that the well is located in an area where the underground conditions are identified as fractured rock and/or basalt terrain?

___ YES X NO

B) Does the drilling log, well log or other geologic/engineering reports indicate that the well is located in an area where the underground conditions are primarily identified as coarse sand and gravel?

X YES ___ NO

*NOTE: Based on bacti and HPC sampling done on 5/19/94.

3) Is the source located in an aquifer with a high horizontal flow rate? (These can include sources located on flood plains of large rivers, artesian wells with high water pressure, and/or shallow flowing wells and springs.)

X YES ___ NO

4) Are there other high capacity wells (agricultural, municipal and/or industrial) located within the CFRs?

a) Presence of ground water extraction wells removing more than approximately 500 gal/min within...

	YES	NO	unknown
< 6 month travel time	___	X	___
6 month–1 year travel time	___	X	___
1–5 year travel time	___	X	___
5–10 year travel time	___	X	___

b) Presence of ground water recharge wells (dry wells) or heavy irrigation within...

	YES	NO	unknown
< 1 year travel time	___	X	___
1–5 year travel time	___	X	___
5–10 year travel time	___	X	___

Please identify or describe additional hydrologic or geographic conditions that you believe may affect the shape of the zone of contribution for this source. Where possible, reference them to locations on the map produced in Part IV.

WELL LOG

No. Appli. 5086
Cert. 3912-A

Date 6-21, 1961

Record by well driller

Source driller's record

Location: State of WASHINGTON

County Whatcom

Area

Map

NW¼ SW¼ sec 3 T 40N., R 1 E. W.M.

Diagram of Section

Drilling Co. G. A. Bezona & Son

Address Ferndale, Wash.

Method of Drilling Date, 19

Owner City of Blaine; Wash.

Address

Land surface, datum ft above / below

Correlation	Material	Thickness (feet)	Depth (feet)
	Sand & gravel (water @ 20')	28	28
	Coarse gravel, water	1	29
	Fine sand, water	9	38
	Loose, coarse gravel, water	18	56
	Hard packed gravel & boulders	3	59
	Coarse, loose gravel, water	12	71
	Hard packed sand	4	75
	(Pulled back to 71 ft.)		
	Dim. 75'x8"		
	DD: 50 ft.		
	Yield: 404 g.p.m.		
	10' perforated casing		
	¼" slot 8" in length from 65 to 75 ft.		

(Transcribe driller's terminology literally but paraphrase as necessary. In parentheses. If material water-bearing, so state and record static level if reported. Give depths in feet below land-surface datum unless otherwise indicated. Correlate with stratigraphic column, if feasible. Following log of materials, list all casings, perforations, screens, etc.)

Turn up

Sheet of sheets

T40N, R1E, 3M

#3

well #3

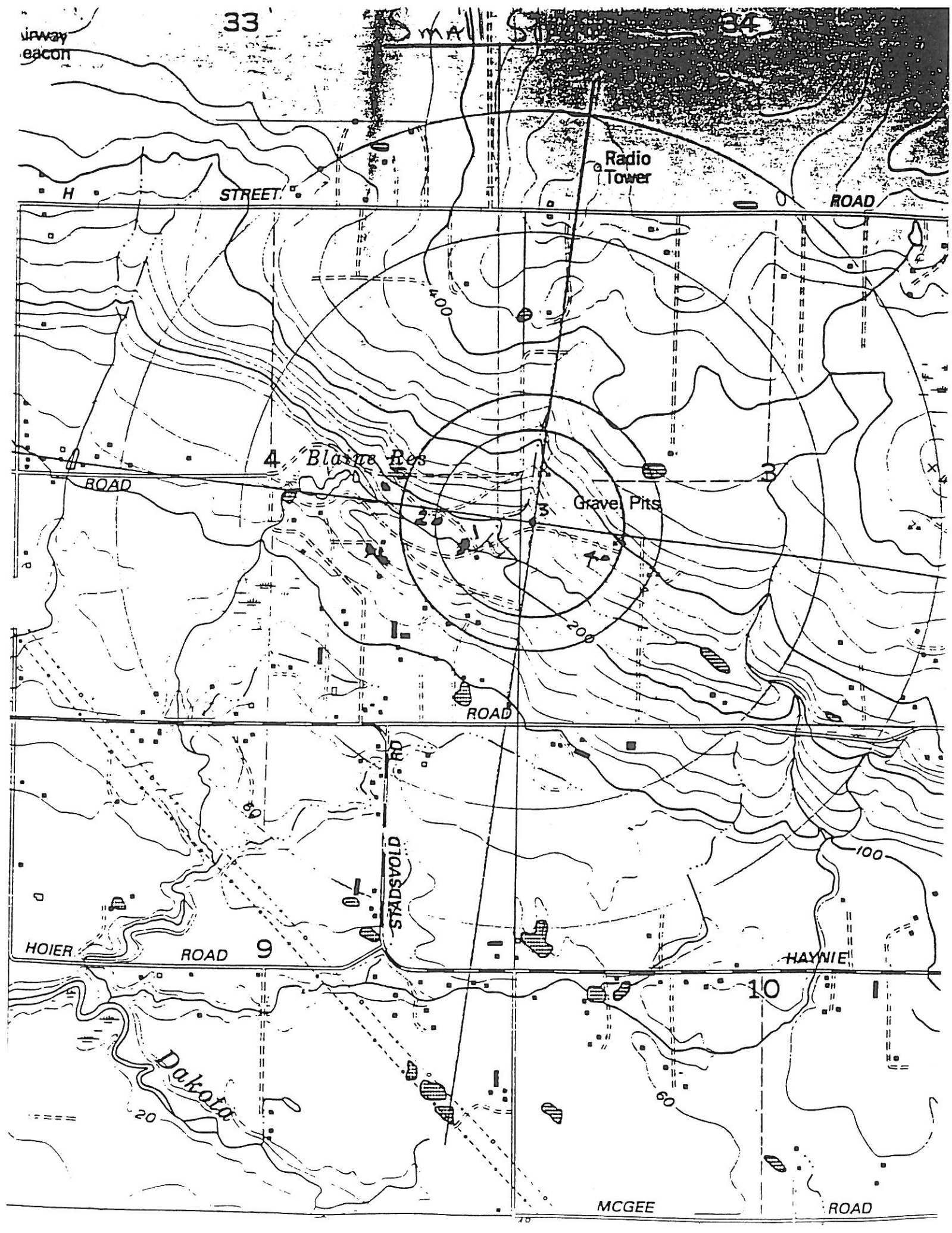
33
34
Small St
Radio Tower
H STREET
ROAD
400
4
Blaine Res
ROAD
Gravel Pits
3
2
1
200
ROAD
69
RD
STADSVOLD
100
HOIER ROAD 9
HAYWIE
10
Dakota
20
60
MCGEE ROAD

Ground Water Contamination
Susceptibility Assessment Survey Form
Version 2.1

IMPORTANT! Please complete one form for each ground water source (well, wellfield, spring) used in your water system. Photocopy as necessary.

PART I: System Information

Well owner/manager : City of Blaine/William M. Duffy

Water system name : City of Blaine

County: Whatcom

Water system number: 07300 U Source number: 04

Well depth: 64 (ft.) (*From WFI form*)

Source name: Well #4

WA well identification tag number:___ ___ ___-___ ___ ___

X well not tagged

Number of connections: 1385 Population served: 3,170

Township: 40 N Range: 01 E

Section: 03 1/4 1/4 Section: NW/SW

Latitude/longitude (if available): 48° 59' 02" / 122° 40' 35"

How was lat./long. determined?

_____ global positioning device _____ survey X topographic map
____other: :

* Please refer to Assistance Packet for details and explanations of all questions in Parts II through V.

PART II: Well Construction and Source Information

1) Date well originally constructed: 5 / 17 / 61 month/day/year

last reconstruction: ___ / ___ /___ month/day/year

_____ information unavailable

2) Well driller: G.A. Bezona and Sons

Ferndale, WA

___ well driller unknown

3) Type of well:

___Drilled: ___ rotary ___ bored ___ cable (percussion) ___ Dug

___ Other: ___ spring(s) ___ lateral collector (Ranney)

___ driven ___ jetted ___ other: _____

Additional comments: Not indicated on drillers report, method of drilling.

4) Well report available? X YES (attach copy to form) ___ NO

If no well log is available, please attach any other records documenting well construction; e.g. boring logs, "as built" sheets, engineering reports, well reconstruction logs.

5) Average pumping rate: 280 (gallons/min)

Source of information: WFI

If not documented, how was pumping rate determined? _____

___ Pumping rate unknown

6) Is this source treated?

If so, what type of treatment:

X disinfection ___ filtration ___ carbon filter ___ air stripper ___ other

Purpose of treatment (describe materials to be removed or controlled by treatment):

To control possible bacterial contamination.

7) If source is chlorinated, is a chlorine residual maintained: X YES ___ NO

Residual level: .1 to .4 mg/L (*At the point closest to the source.*)

PART III: Hydrogeologic Information

1) Depth to top of open interval: [check one]

___ < 20 ft ___ 20–50 ft X 50–100 ft ___ 100–200 ft ___ >200 ft

___ information unavailable ('< ' *means less than;* '> ' *means greater than*)

2) Depth to ground water (static water level):

___ < 20 ft X 20–50 ft ___ 50–100 ft ___ > 100 ft

___ flowing well/spring (artesian)

How was water level determined?

___ well log ___ other: static level probed in April

___ depth to ground water unknown

3) If source is a flowing well or spring, what is the confining pressure:

_____ psi (pounds per square inch)
or
_____ feet above wellhead

4) If source is a flowing well or spring, is there a surface impoundment, reservoir, or catchment associated with this source: ___ YES ___ NO

5) Wellhead elevation (height above mean sea level): 280 (ft)

How was elevation determined? X topographic map ___ Drilling/Well Log ___ altimeter

___ other: _____

___ information unavailable

6) Confining layers: (This can be completed only for those sources with a drilling log, well log or geologic report describing subsurface conditions. Please refer to assistance package for example.)

X evidence of a confining layer in well log

___ no evidence of a confining layer in well log

If there is evidence of a confining layer, is the depth to ground water more than 20 feet above the ~~top~~ bottom of the ~~open interval~~? lowest confining layer ___ YES X NO

___ information unavailable

7) Sanitary setback:

___ < 100 ft* ___ 100-120 ft ___ 120-200 ft X > 200 ft
* if less than 100 ft describe the site conditions:

8) Wellhead construction:

X wellhead enclosed in a wellhouse

X controlled access (describe): Limited access road with 24-hour locked gates.

___ other uses for wellhouse (describe): _____

___ no wellhead control

9) Surface seal:

___ 18 ft

___ < 18 ft (no Department of Ecology approval) ('< ' *means less than*)

___ < 18 ft (Approved by Ecology, include documentation) ('< ' *means less than*)

___ > 18 ft ('> ' *means greater than*)

X depth of seal unknown

___ no surface seal

10) Annual rainfall (inches per year):

___ < 10 in/yr ___ 10-25 in/yr X > 25 in/yr

PART IV: Mapping Your Ground Water Resource

1) Annual volume of water pumped: 150,094,560 (gallons)

How was this determined?

___ meter

_X_ estimated: _X_ pumping rate (Hours ran x well capacity)

___ pump capacity (_____)

___ other: _____

2) "Calculated Fixed Radius" estimate of ground water movement:
(see Instruction Packet)

6 month ground water travel time : 620 (ft)

1 year ground water travel time : 880 (ft)

5 year ground water travel time: 1,970 (ft)

10 year ground water travel time: 2,780 (ft)

Information available on length of screened/open interval?

___ YES ___ NO

Length of screened/open interval: 18 (ft)

3) Is there a river, lake, pond, stream, or other obvious surface water body within the 6 month time of travel boundary? _X_ YES ___ NO (mark and identify on map).

4) Is there a stormwater and/or wastewater facility, treatment lagoon, or holding pond located within the 6 month time of travel boundary? ___ YES _X_ NO (mark and identify on map).

Comments: There is a reservoir located in the watershed area, but we are unable to establish if it is within the six-month time of travel because of lack of open interval measurements.

PART V: Assessment of Water Quality

1) Regional sources of risk to ground water:

Please indicate if any of the following are present within a circular area around your water source having a radius up to and including the five year ground water travel time:

	6 month	1 year	5 year	unknown	
likely pesticide application				X	
stormwater injection wells				X	
other injection wells				X	
abandoned ground water well	X				
landfills, dumps, disposal areas				X	None?
known hazardous materials clean-up site				X	None?
water system(s) with known quality problems				X	None?
population density > 1 house/acre				X	None?
residences commonly have septic tanks			X		
Wastewater treatment lagoons					None
sites used for land application of waste					None

Mark and identify on map any of the risks listed above which are located within the 6 month time of travel boundary? (*Please include a map of the wellhead and time of travel areas with this form. Please locate and mark any of the following.*)

If other recorded or potential sources of ground water contamination exist within the ten year time of travel circular zone around your water supply, please describe:

2) Source specific water quality records:

Please indicate the occurrence of any test results since 1986 that meet the following conditions: (Unless listed on assessment, MCLs are listed in assistance package.)

A. Nitrate: (Nitrate MCL = 10 mg/l)	YES	NO
Results greater than MCL		X
< 2 mg/liter nitrate	X	
2–5 mg/liter nitrate		X
> 5 mg/liter nitrate		X
___ Nitrate sampling records unavailable		

B. VOCs: (VOC detection level 0.5 ug/l or 0.0005 mg/l.)	YES	NO
Results greater than MCL or SAL		X
VOCs detected at least once		X
VOCs never detected	X	
___ VOC sampling records unavailable		

C. EDB/DBCP:	YES	NO
(EDB MCL = 0.05 ug/l or 0.00005 mg/l. DBCP MCL = 0.2 ug/l or 0.0002 mg/l.)		
EDB/DBCP detected below MCL at least once		
EDB/DBCP detected above MCL at least once		
EDB/DBCP never detected		
___ EDB/DBCP tests required but not yet completed		
X EDB/DBCP tests not required		

D. Other SOCs (Pesticides):	YES	NO
Other SOCs detected		
(pesticides and other synthetic organic chemicals)		
___ Other SOC tests performed but none detected		
(list test methods in comments		
X Other SOC tests not performed		

If any SOCs in addition to EDB/DBCP were detected, please identify and date. If other SOC tests were performed, but no SOCs detected, list test methods here: _____

_____

_____

_____

E. Bacterial contamination:

	YES	NO
Any bacterial detection(s) in the past 3 years in samples taken from the source (not distribution sampling records).	___	X*
Has source (in past 3 years) had a bacteriological contamination problem found in distribution samples that was attributed to the source.	___	X

___ Source sampling records for bacteria unavailable

Part VI: Geographic or Hydrologic Factors Contributing to a Non-Circular Zone of Contribution

The following questions will help identify those ground water systems which may not be accurately represented by the calculated fixed radius (CFR) method described in Part IV. For these sources, the CFR areas should be used as a preliminary delineation of the critical time of travel zones for that source. As a system develops its Wellhead Protection Plan for theses sources, a more detailed delineation method should be considered.

1) Is there evidence of obvious hydrologic boundaries within the 10 year time of travel zone of the CFR? (Does the largest circle extend over a stream, river, lake, up a steep hillside, and/or over a mountain or ridge?)

X YES ___ NO

Describe with references to map produced in Part IV:

_____

_____

2) Aquifer Material:

A) Does the drilling log, well log or other geologic/engineering reports identify that the well is located in an area where the underground conditions are identified as fractured rock and/or basalt terrain?

___ YES X NO

B) Does the drilling log, well log or other geologic/engineering reports indicate that the well is located in an area where the underground conditions are primarily identified as coarse sand and gravel?

___ YES X NO

*NOTE: Based on bacti and HPC sampling done 5/19/94.

3) Is the source located in an aquifer with a high horizontal flow rate? (These can include sources located on flood plains of large rivers, artesian wells with high water pressure, and/or shallow flowing wells and springs.)

___ YES X NO

4) Are there other high capacity wells (agricultural, municipal and/or industrial) located within the CFRs?

a) Presence of ground water extraction wells removing more than approximately 500 gal/min within...

	YES	NO	unknown
< 6 month travel time	___	X	___
6 month–1 year travel time	___	X	___
1–5 year travel time	___	X	___
5–10 year travel time	___	X	___

b) Presence of ground water recharge wells (dry wells) or heavy irrigation within...

	YES	NO	unknown
< 1 year travel time	___	X	___
1–5 year travel time	___	X	___
5–10 year travel time	___	X	___

Please identify or describe additional hydrologic or geographic conditions that you believe may affect the shape of the zone of contribution for this source. Where possible, reference them to locations on the map produced in Part IV.

Suggestions and Comments

Did you attend one of the susceptibility workshops? X YES ___ NO

Did you find it useful? X YES ___ NO

Did you seek outside assistance to complete the assessment? X YES ___ NO

This form and instruction packet are still in the process of development. Your comments, suggestions and questions will help us upgrade and improve this assessment form. If you found particular sections confusing or problematic please let us know. How could this susceptibility assessment be improved or made clearer? Did the instruction package help you find the information needed to complete the assessment? How much time did it take you to complete the form? Were you able to complete the assessment without additional/outside expertise? Do you feel the assessment was valuable as a learning experience? Any other comments or constructive criticisms you have would be appreciated.

1961 TEST WELL #4

AT 104-D

free flows from 1¼" pipe siphons into Creek

G. A. BEZON & SON

Drilling Contractors

Ferndale, Washington

Phone 3125

DAILY PROGRESS REPORT

Description of Well Blaine #4 Sec._____ Twnshp._____ Range_____

Diameter of hole 8 inches Driller G.A.Bezona

Date	DEPTH IN FEET From	To	DESCRIPTIVE NOTES
5/17/61	00	12	Gravel
	12	36	Blue clay, With some gravel
	36	38	Large gravel, hard packed
	38	62	Coarse grav, Water and sand, Loose
	62	67	Sand, hard packed
	67	72	Silty sand, Brown
	72	82 T.D	Silty sand, Blue with clay
5/24/ "	Pull 8"32	65	Filled hole below ,
5/25/ "	Pull 8"65	62	Assembled Screen
5/26/ "	Installed 8"	Puro screen	15' " 70-75-80 and Developing
5/31/ "			Developing Well surging
6/1/61"			Rigging for air Compressor
6/2/ "			Developing with air Compressor
6/4/ "			Developing with Compressor
6/5/ "			Test pumped well Minimum 2.50.00 - 0
			Additional 36 hrs @ 5.00 180.00 -- 0
6/13/ 61			Pulled screen and 8" pipe to 36'
6/17/ "			Hauling 8" casing and perforating
6/8/ "			Welding in 8" casing, cleaning out
6/9/ "			Welding in and clean out to 60'1"
6/12/"			Developing 8" well --5-
			Total -- 87
			10ft of slotted pipe, 5 slots to each ft

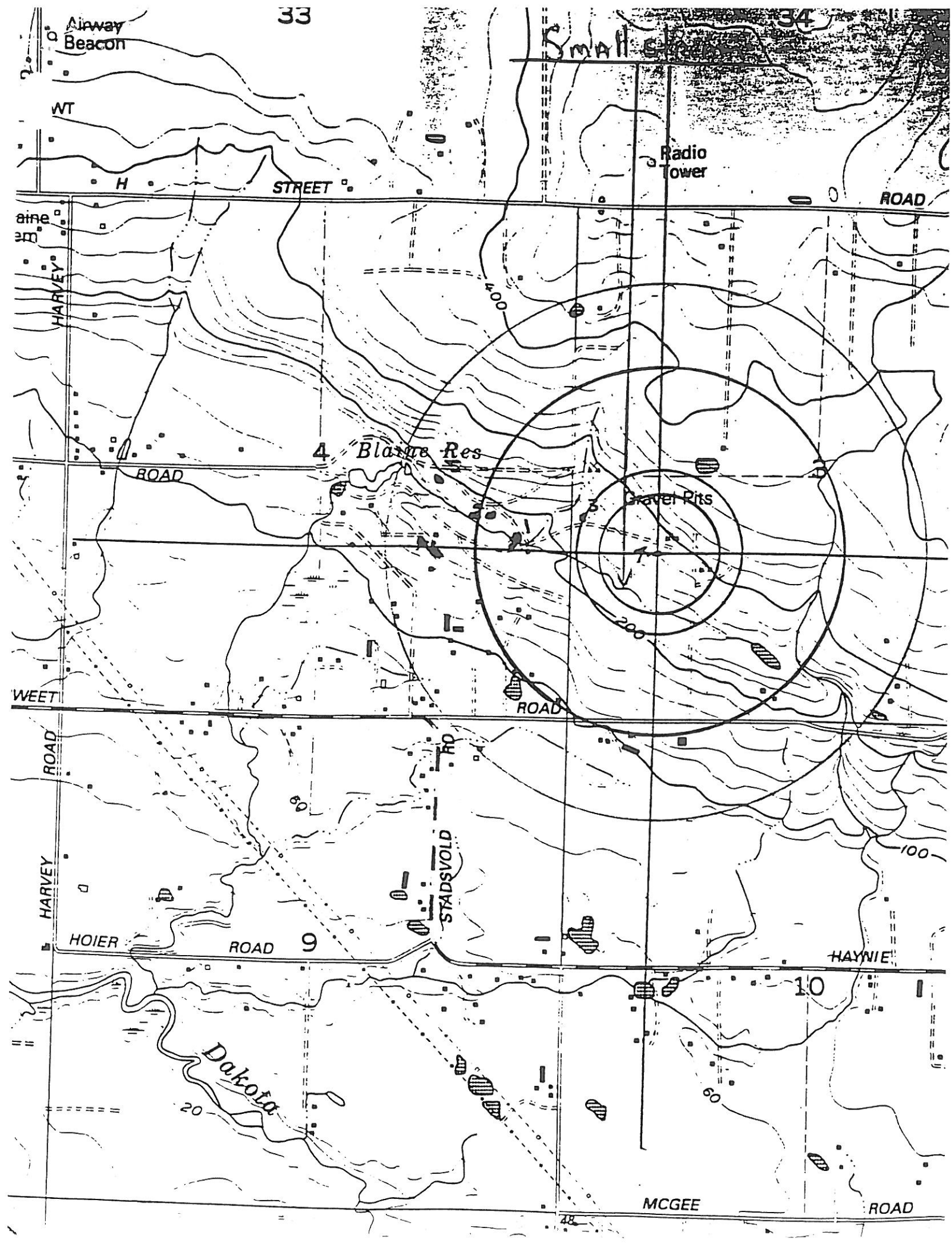
33
34
Airway Beacon
Small
WT
H STREET
Radio Tower
ROAD
HARVEY
400
4 Blaine Res
ROAD
Gravel Pits
200
WEET
ROAD
ROAD
RD
60
HARVEY
STADSVOLD
100
HOIER ROAD
9
HAYNIE
10
Dakota
20
60
MCGEE
ROAD

Ground Water Contamination
Susceptibility Assessment Survey Form
Version 2.1

IMPORTANT! Please complete one form for each ground water source (well, wellfield, spring) used in your water system. Photocopy as necessary.

PART I: System Information

Well owner/manager : City of Blaine/William M. Duffy

Water system name : City of Blaine

County: Whatcom

Water system number: 07300 U Source number: 05

Well depth: 380 (ft.) (*From WFI form*)

Source name: Well #5

WA well identification tag number:___ ___ ___-___ ___ ___

X well not tagged

Number of connections: 1385 Population served: 3,170

Township: 40 N Range: 01 E

Section: 31 1/4 1/4 Section: SE/SE

Latitude/longitude (if available): 48° 59' 10" / 122° 41' 13"

How was lat./long. determined?

_____ global positioning device _____ survey X topographic map
____other: _____

* Please refer to Assistance Packet for details and explanations of all questions in Parts II through V.

PART II: Well Construction and Source Information

1) Date well originally constructed: ___ / ___ /___ month/day/year

last reconstruction: ___ / ___ /___ month/day/year

X information unavailable

2) Well driller: _____

_____

_____

__X__ well driller unknown

3) Type of well:

__Drilled: ___ rotary ___ bored ___ cable (percussion) ___ Dug

___ Other: ___ spring(s) ___ lateral collector (Ranney)

___ driven ___ jetted ___ other: _____

Additional comments: _____

_____

4) Well report available? __X__ YES (attach copy to form) ___ NO

If no well log is available, please attach any other records documenting well construction; e.g. boring logs, "as built" sheets, engineering reports, well reconstruction logs.

5) Average pumping rate: 400 (gallons/min)

Source of information: WFI

If not documented, how was pumping rate determined? _____

_____

___ Pumping rate unknown

6) Is this source treated?

If so, what type of treatment:

__X__ disinfection ___ filtration ___ carbon filter ___ air stripper ___ other

Purpose of treatment (describe materials to be removed or controlled by treatment):

To control possible bacterial contamination.

_____

7) If source is chlorinated, is a chlorine residual maintained: __X__ YES ___ NO

Residual level: .1 to .4 mg/L (*At the point closest to the source.*)

PART III: Hydrogeologic Information

1) Depth to top of open interval: [check one]

___ < 20 ft ___ 20-50 ft ___ 50-100 ft ___ 100-200 ft X > 200 ft

___ information unavailable ('< ' *means less than;* '> ' *means greater than*)

2) Depth to ground water (static water level):

___ < 20 ft ___ 20-50 ft X 50-100 ft ___ > 100 ft

___ flowing well/spring (artesian)

How was water level determined?

X well log ___ other: _____

___ depth to ground water unknown

3) If source is a flowing well or spring, what is the confining pressure:

_____ psi (pounds per square inch)
or
_____ feet above wellhead

4) If source is a flowing well or spring, is there a surface impoundment, reservoir, or catchment associated with this source: ___ YES X NO

5) Wellhead elevation (height above mean sea level): 143 (ft)

How was elevation determined? ___ topographic map X Drilling/Well Log ___ altimeter

___ other: _____

___ information unavailable

6) Confining layers: (This can be completed only for those sources with a drilling log, well log or geologic report describing subsurface conditions. Please refer to assistance package for example.)

___ evidence of a confining layer in well log

X no evidence of a confining layer in well log

If there is evidence of a confining layer, is the depth to ground water more than 20 feet above the ~~top~~ bottom of the ~~open interval~~? lowest confining layer ___ YES X NO

___ information unavailable

7) Sanitary setback:

__ < 100 ft* __ 100-120 ft __ 120-200 ft X > 200 ft
* if less than 100 ft describe the site conditions:

8) Wellhead construction:

X wellhead enclosed in a wellhouse

X controlled access (describe): Limited access road with 24-hour locked gate.

__ other uses for wellhouse (describe): _____

__ no wellhead control

9) Surface seal:

__ 18 ft

__ < 18 ft (no Department of Ecology approval) ('< ' *means less than*)

__ < 18 ft (Approved by Ecology, include documentation) ('< ' *means less than*)

__ > 18 ft ('> ' *means greater than*)

X depth of seal unknown

__ no surface seal

10) Annual rainfall (inches per year):

__ < 10 in/yr __ 10-25 in/yr X > 25 in/yr

PART IV: Mapping Your Ground Water Resource

1) Annual volume of water pumped: 72,228,000 (gallons)

How was this determined?

___ meter

___ estimated: _X_ pumping rate (Hours ran x well capacity)

___ pump capacity (_____)

___ other: _____

2) "Calculated Fixed Radius" estimate of ground water movement:
(see Instruction Packet)

6 month ground water travel time : 440 (ft)

1 year ground water travel time : 620 (ft)

5 year ground water travel time: 1,390 (ft)

10 year ground water travel time: 1,970 (ft)

Information available on length of screened/open interval?

_X_ YES ___ NO

Length of screened/open interval: _____(ft)

3) Is there a river, lake, pond, stream, or other obvious surface water body within the 6 month time of travel boundary? _X_ YES ___ NO (mark and identify on map).

4) Is there a stormwater and/or wastewater facility, treatment lagoon, or holding pond located within the 6 month time of travel boundary? ___ YES _X_ NO (mark and identify on map).

Comments: There is a reservoir located in the watershed area, but we are unable to establish if it is within the six-month time of travel because of lack of open interval measurements.

PART V: Assessment of Water Quality

1) Regional sources of risk to ground water:

Please indicate if any of the following are present within a circular area around your water source having a radius up to and including the five year ground water travel time:

	6 month	1 year	5 year	unknown	
likely pesticide application				X	
stormwater injection wells				X	None?
other injection wells				X	None?
abandoned ground water well		X			
landfills, dumps, disposal areas				X	None
known hazardous materials clean-up site				X	None
water system(s) with known quality problems				X	None
population density > 1 house/acre				X	None
residences commonly have septic tanks			X		
Wastewater treatment lagoons				X	None
sites used for land application of waste				X	None

Mark and identify on map any of the risks listed above which are located within the 6 month time of travel boundary? (*Please include a map of the wellhead and time of travel areas with this form. Please locate and mark any of the following.*)

If other recorded or potential sources of ground water contamination exist within the ten year time of travel circular zone around your water supply, please describe:

2) Source specific water quality records:

Please indicate the occurrence of any test results since 1986 that meet the following conditions: (Unless listed on assessment, MCLs are listed in assistance package.)

A. Nitrate: (Nitrate MCL = 10 mg/l)	YES	NO
Results greater than MCL	___	X
< 2 mg/liter nitrate	X	___
2–5 mg/liter nitrate	___	X
> 5 mg/liter nitrate	___	X
___ Nitrate sampling records unavailable		

B. VOCs: (VOC detection level 0.5 ug/l or 0.0005 mg/l.)	YES	NO
Results greater than MCL or SAL	___	X
VOCs detected at least once	___	X
VOCs never detected	X	___
___ VOC sampling records unavailable		

C. EDB/DBCP:	YES	NO
(EDB MCL = 0.05 ug/l or 0.00005 mg/l. DBCP MCL = 0.2 ug/l or 0.0002 mg/l.)		
EDB/DBCP detected below MCL at least once	___	___
EDB/DBCP detected above MCL at least once	___	___
EDB/DBCP never detected	___	___
___ EDB/DBCP tests required but not yet completed		
X EDB/DBCP tests not required		

D. Other SOCs (Pesticides):	YES	NO
Other SOCs detected	___	___
(pesticides and other synthetic organic chemicals)		
___ Other SOC tests performed but none detected		
(list test methods in comments		
X Other SOC tests not performed		

If any SOCs in addition to EDB/DBCP were detected, please identify and date. If other SOC tests were performed, but no SOCs detected, list test methods here: _____

_____

_____

_____

E. Bacterial contamination:

	YES	NO
Any bacterial detection(s) in the past 3 years in samples taken from the source (not distribution sampling records).	___	X*
Has source (in past 3 years) had a bacteriological contamination problem found in distribution samples that was attributed to the source.	___	X

___ Source sampling records for bacteria unavailable

Part VI: Geographic or Hydrologic Factors Contributing to a Non-Circular Zone of Contribution

The following questions will help identify those ground water systems which may not be accurately represented by the calculated fixed radius (CFR) method described in Part IV. For these sources, the CFR areas should be used as a preliminary delineation of the critical time of travel zones for that source. As a system develops its Wellhead Protection Plan for theses sources, a more detailed delineation method should be considered.

1) Is there evidence of obvious hydrologic boundaries within the 10 year time of travel zone of the CFR? (Does the largest circle extend over a stream, river, lake, up a steep hillside, and/or over a mountain or ridge?)

X YES ___ NO

Describe with references to map produced in Part IV:

Pond

2) Aquifer Material:

A) Does the drilling log, well log or other geologic/engineering reports identify that the well is located in an area where the underground conditions are identified as fractured rock and/or basalt terrain?

___ YES X NO

B) Does the drilling log, well log or other geologic/engineering reports indicate that the well is located in an area where the underground conditions are primarily identified as coarse sand and gravel?

X YES ___ NO

*NOTE: Based on bacti and HPC sampling done on 5/19/94.

Suggestions and Comments

Did you attend one of the susceptibility workshops? X YES ___ NO

Did you find it useful? X YES ___ NO

Did you seek outside assistance to complete the assessment? X YES ___ NO

This form and instruction packet are still in the process of development. Your comments, suggestions and questions will help us upgrade and improve this assessment form. If you found particular sections confusing or problematic please let us know. How could this susceptibility assessment be improved or made clearer? Did the instruction package help you find the information needed to complete the assessment? How much time did it take you to complete the form? Were you able to complete the assessment without additional/outside expertise? Do you feel the assessment was valuable as a learning experience? Any other comments or constructive criticisms you have would be appreciated.

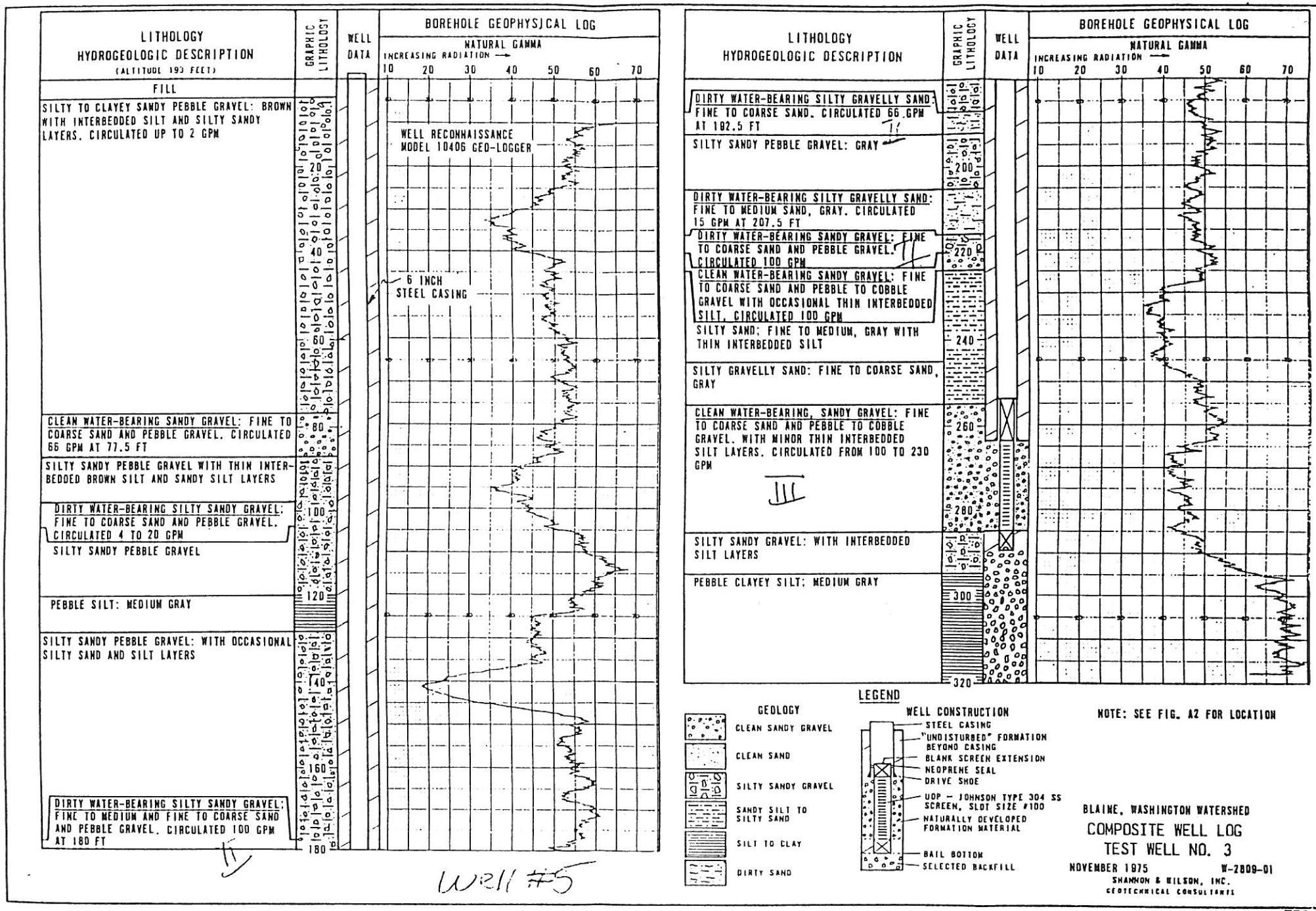
LITHOLOGY
HYDROGEOLOGIC DESCRIPTION
(ALTITUDE 193 FEET)
GRAPHIC LITHOLOGY
WELL DATA
BOREHOLE GEOPHYSICAL LOG
NATURAL GAMMA
INCREASING RADIATION →
10 20 30 40 50 60 70
FILL
SILTY TO CLAYEY SANDY PEBBLE GRAVEL: BROWN WITH INTERBEDDED SILT AND SILTY SANDY LAYERS. CIRCULATED UP TO 2 GPM
WELL RECONNAISSANCE MODEL 10406 GEO-LOGGER
6 INCH STEEL CASING
CLEAN WATER-BEARING SANDY GRAVEL: FINE TO COARSE SAND AND PEBBLE GRAVEL. CIRCULATED 66 GPM AT 77.5 FT
SILTY SANDY PEBBLE GRAVEL WITH THIN INTERBEDDED BROWN SILT AND SANDY SILT LAYERS
DIRTY WATER-BEARING SILTY SANDY GRAVEL: FINE TO COARSE SAND AND PEBBLE GRAVEL. CIRCULATED 4 TO 20 GPM
SILTY SANDY PEBBLE GRAVEL
PEBBLE SILT: MEDIUM GRAY
SILTY SANDY PEBBLE GRAVEL: WITH OCCASIONAL SILTY SAND AND SILT LAYERS
DIRTY WATER-BEARING SILTY SANDY GRAVEL: FINE TO MEDIUM AND FINE TO COARSE SAND AND PEBBLE GRAVEL. CIRCULATED 100 GPM AT 180 FT
DIRTY WATER-BEARING SILTY GRAVELLY SAND: FINE TO COARSE SAND. CIRCULATED 66 GPM AT 192.5 FT
SILTY SANDY PEBBLE GRAVEL: GRAY
DIRTY WATER-BEARING SILTY GRAVELLY SAND: FINE TO MEDIUM SAND, GRAY. CIRCULATED 15 GPM AT 207.5 FT
DIRTY WATER-BEARING SANDY GRAVEL: FINE TO COARSE SAND AND PEBBLE GRAVEL. CIRCULATED 100 GPM
CLEAN WATER-BEARING SANDY GRAVEL: FINE TO COARSE SAND AND PEBBLE TO COBBLE GRAVEL WITH OCCASIONAL THIN INTERBEDDED SILT. CIRCULATED 100 GPM
SILTY SAND: FINE TO MEDIUM, GRAY WITH THIN INTERBEDDED SILT
SILTY GRAVELLY SAND: FINE TO COARSE SAND, GRAY
CLEAN WATER-BEARING, SANDY GRAVEL: FINE TO COARSE SAND AND PEBBLE TO COBBLE GRAVEL, WITH MINOR THIN INTERBEDDED SILT LAYERS. CIRCULATED FROM 100 TO 230 GPM
SILTY SANDY GRAVEL: WITH INTERBEDDED SILT LAYERS
PEBBLE CLAYEY SILT: MEDIUM GRAY
LEGEND
GEOLOGY
CLEAN SANDY GRAVEL
CLEAN SAND
SILTY SANDY GRAVEL
SANDY SILT TO SILTY SAND
SILT TO CLAY
DIRTY SAND
WELL CONSTRUCTION
STEEL CASING
"UNDISTURBED" FORMATION BEYOND CASING
BLANK SCREEN EXTENSION
NEOPRENE SEAL
DRIVE SHOE
UOP – JOHNSON TYPE 304 SS SCREEN, SLOT SIZE #100
NATURALLY DEVELOPED FORMATION MATERIAL
BAIL BOTTOM
SELECTED BACKFILL
NOTE: SEE FIG. A2 FOR LOCATION
BLAINE, WASHINGTON WATERSHED
COMPOSITE WELL LOG
TEST WELL NO. 3
NOVEMBER 1975
W-2809-01
SHANNON & WILSON, INC.
GEOTECHNICAL CONSULTANTS

Well #5

FIG.

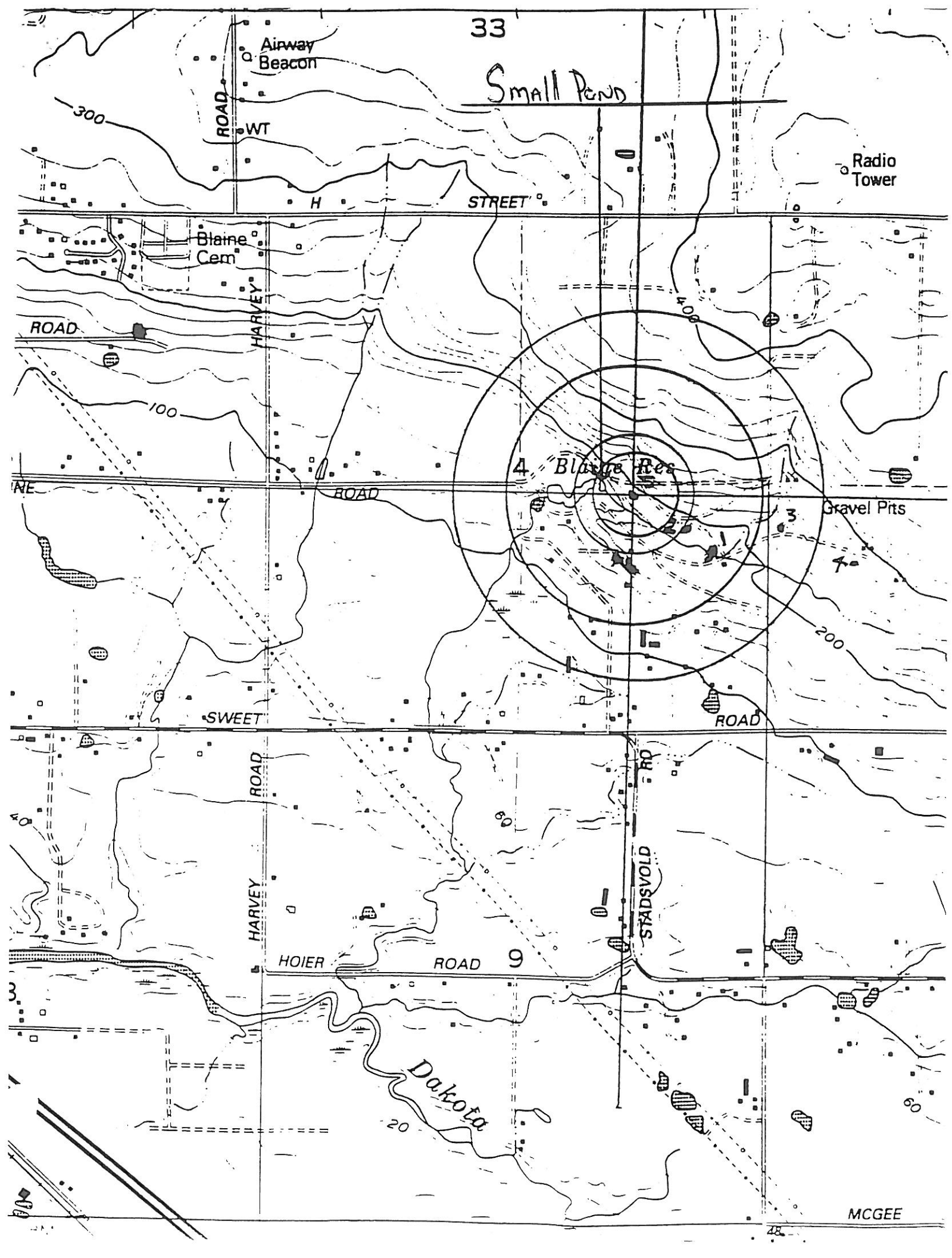
33
Airway Beacon
Small Pond
ROAD
300
WT
Radio Tower
H
STREET
Blaine Cem
HARVEY
ROAD
400
100
4 Blaine Res
NE
ROAD
Gravel Pits
3
4
200
SWEET
ROAD
ROAD
RD
40
60
HARVEY
STADSVOLD
HOIER
ROAD
9
3
Dakota
20
60
MCGEE
48

Ground Water Contamination
Susceptibility Assessment Survey Form
Version 2.1

IMPORTANT! Please complete one form for each ground water source (well, wellfield, spring) used in your water system. Photocopy as necessary.

PART I: System Information

Well owner/manager : City of Blaine/William M. Duffy

Water system name : City of Blaine

County: Whatcom

Water system number: 07300 U Source number: 06

Well depth: 246 (ft.) (*From WFI form*)

Source name: Lincoln Park

WA well identification tag number:___ ___ ___-___ ___ ___

X well not tagged

Number of connections: 1385 Population served: 3,170

Township: 41 N Range: 01 E

Section: 31 1/4 1/4 Section: SW/SE

Latitude/longitude (if available): 48° 59' 51" / 122° 43' 34"

How was lat./long. determined?

_____ global positioning device _____ survey X topographic map
____other: :

* Please refer to Assistance Packet for details and explanations of all questions in Parts II through V.

PART II: Well Construction and Source Information

1) Date well originally constructed: 9 / ___ /69 month/day/year

last reconstruction: ___ / ___ /___ month/day/year

_____ information unavailable

PART III: Hydrogeologic Information

1) Depth to top of open interval: [check one]

___ < 20 ft ___ 20-50 ft ___ 50-100 ft X 100-200 ft ___ >200 ft

___ information unavailable (*'< ' means less than; '> ' means greater than*)

2) Depth to ground water (static water level):

___ < 20 ft ___ 20-50 ft X 50-100 ft ___ >100 ft

___ flowing well/spring (artesian)

How was water level determined?

X well log ___ other: _____

__ depth to ground water unknown

3) If source is a flowing well or spring, what is the confining pressure:

_____ psi (pounds per square inch)
or
_____ feet above wellhead

4) If source is a flowing well or spring, is there a surface impoundment, reservoir, or catchment associated with this source: ___ YES ___ NO

5) Wellhead elevation (height above mean sea level): 196 (ft)

How was elevation determined? ___ topographic map X Drilling/Well Log ___ altimeter

___ other: _____

___ information unavailable

6) Confining layers: (This can be completed only for those sources with a drilling log, well log or geologic report describing subsurface conditions. Please refer to assistance package for example.)

X evidence of a confining layer in well log

___ no evidence of a confining layer in well log

If there is evidence of a confining layer, is the depth to ground water more than 20 feet above the ~~xxx~~ bottom of the ~~xxxxxxxxxx~~ lowest confining layer? X YES ___ NO

___ information unavailable

PART IV: Mapping Your Ground Water Resource

1) Annual volume of water pumped: 67,769,000 (gallons)

How was this determined?

___ meter

___ estimated: X pumping rate (Hours ran x well capacity)

___ pump capacity (_____)

___ other: _____

2) "Calculated Fixed Radius" estimate of ground water movement:
(see Instruction Packet)

6 month ground water travel time : 440 (ft)

1 year ground water travel time : 620 (ft)

5 year ground water travel time: 1,390 (ft)

10 year ground water travel time: 1,970 (ft)

Information available on length of screened/open interval?

X YES ___ NO

Length of screened/open interval: 23 (ft)

3) Is there a river, lake, pond, stream, or other obvious surface water body within the 6 month time of travel boundary? ___ YES X NO (mark and identify on map).

4) Is there a stormwater and/or wastewater facility, treatment lagoon, or holding pond located within the 6 month time of travel boundary? ___ YES X NO (mark and identify on map).

Comments: _____

_____

_____

_____

_____

2) Source specific water quality records:

Please indicate the occurrence of any test results since 1986 that meet the following conditions: (Unless listed on assessment, MCLs are listed in assistance package.)

A. Nitrate: (Nitrate MCL = 10 mg/l)	YES	NO
Results greater than MCL	___	X
< 2 mg/liter nitrate	X	___
2-5 mg/liter nitrate	___	X
> 5 mg/liter nitrate	___	X

___ Nitrate sampling records unavailable

B. VOCs: (VOC detection level 0.5 ug/l or 0.0005 mg/l.)	YES	NO
Results greater than MCL or SAL	___	X
VOCs detected at least once	___	X
VOCs never detected	X	___

___ VOC sampling records unavailable

C. EDB/DBCP:	YES	NO
(EDB MCL = 0.05 ug/l or 0.00005 mg/l. DBCP MCL = 0.2 ug/l or 0.0002 mg/l.)		
EDB/DBCP detected below MCL at least once	___	___
EDB/DBCP detected above MCL at least once	___	___
EDB/DBCP never detected	___	___

___ EDB/DBCP tests required but not yet completed

X EDB/DBCP tests not required

D. Other SOCs (Pesticides):	YES	NO
Other SOCs detected	___	___
(pesticides and other synthetic organic chemicals)		

___ Other SOC tests performed but none detected
(list test methods in comments

X Other SOC tests not performed

If any SOCs in addition to EDB/DBCP were detected, please identify and date. If other SOC tests were performed, but no SOCs detected, list test methods here: _____

_____

_____

_____

13-S4-T40-R1 5/40

bt. .3 mi. No. of Sweet rd. abt. .9 i. E. of int. with Harvey rd. E½, SE¼, elev. abt 177
Jannsen 1929 City of Blaine

WELL (1)

	Th	Dp
clay, lower 60' blue	95	95
hardpan	55	150
gravel, cemented	80	230
l , lower 105' blue	136	366
blue sandy shale	9	375
gravel, cemented, lower 4 ft has large rocks	33	408
yard shale	6	414
gravel, cemented	62	476
shale	3	479
gravel	1	480
shale w/streaks of gravel	59	539
Shale	14	553
solid rock	1	554
clay w/gravel and rocks	68	622
sand	9	631
gravel and rocks	7	638
clay and rocks	45	683

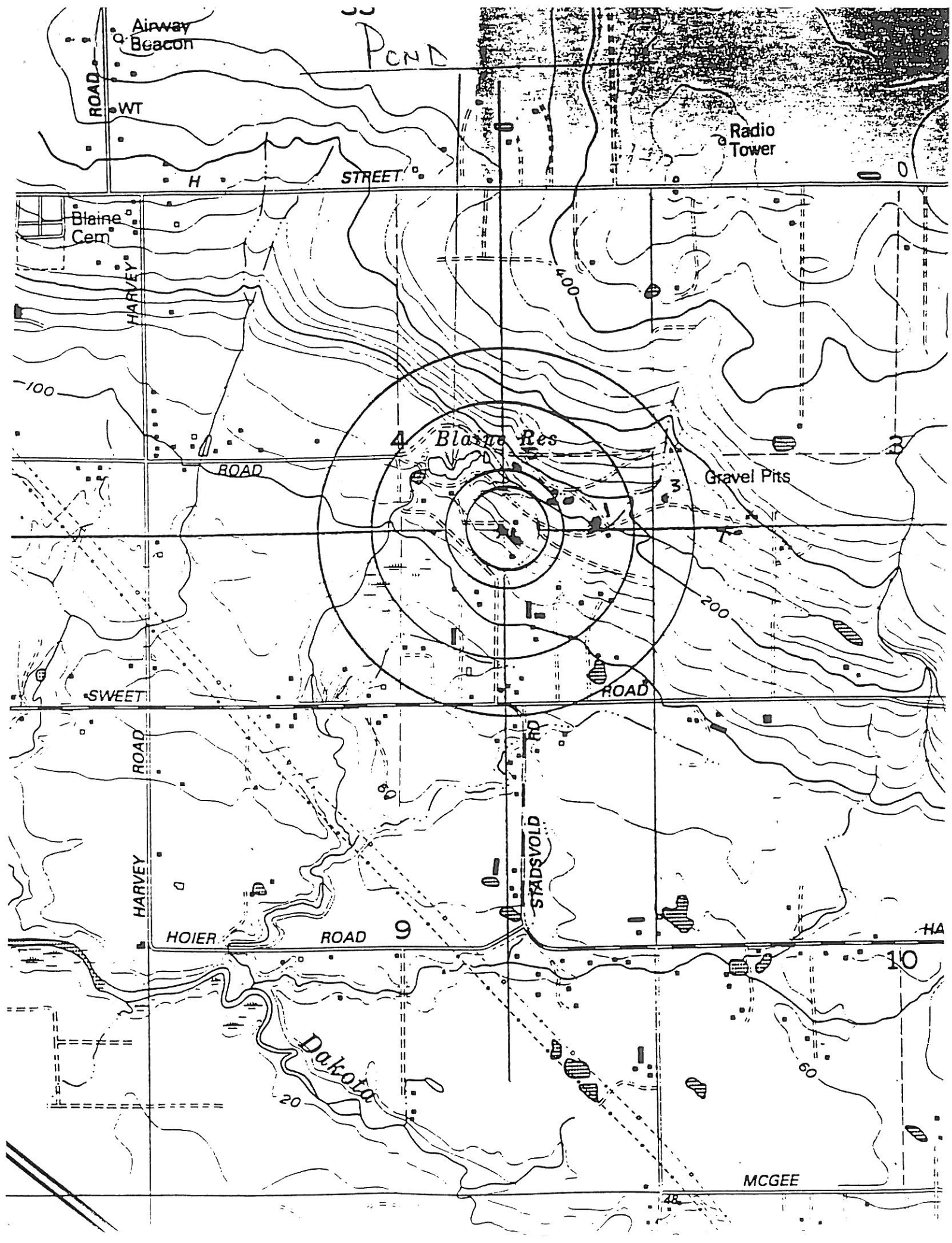
Airway Beacon
ROAD
WT
POND
Radio Tower
H STREET
Blaine Cem
HARVEY
400
100
4 Blaine Res
ROAD
3
Gravel Pits
200
SWEET
ROAD
ROAD
60
HARVEY
STADSVOLD
HOIER ROAD 9
10
Dakota
20
60
MCGEE

Response

Ground Water Contamination
Susceptibility Assessment Survey Form
Version 2.2

IMPORTANT! **Please complete one form for each ground water source (well, wellfield, spring) used in your water system. Photocopy as necessary.**

PART I: System Information

Well owner/manager : City of Blaine/William Duffy

Water system name : City of Blaine

County: Whatcom

Water system number: 07300 U Source number: 07

Well depth: 200 (ft.) (*From WFI form*)

Source name: 12th Street

WA well identification tag number: ___ ___ ___-___ ___ ___

___x___ well not tagged

Number of connections: 1385 Population served: 3,170

Township: 41N Range: 01E

Section: 31 1/4 1/4 Section: SW/SE

Latitude/longitude (if available): 48°59'49' / 122°44'00'

How was lat./long. determined?

___ global positioning device ___ survey ___x___ topographic map
___ other: _____

* Please refer to Assistance Packet for details and explanations of all questions in Parts II through V.

PART II: Well Construction and Source Information

1) Date well originally constructed: ___ / ___ / 29 month/day/year

last reconstruction: ___ / ___ / ___ month/day/year

_____ information unavailable

RECEIVED
SEP 18 1995
Department of Health
Division of Drinking Water

2) Well driller: Jannsen

___ well driller unknown

3) Type of well:

___Drilled: ___ rotary ___ bored ___ cable (percussion) ___ Dug

___ Other: ___ spring(s) ___ lateral collector (Ranney)

___ driven ___ jetted ___ other: _____

Additional comments: Unknown method of construction - not in well log.

4) Well report available? X YES (attach copy to form) ___ NO

If no well log is available, please attach any other records documenting well construction; e.g. boring logs, "as built" sheets, engineering reports, well reconstruction logs.

5) Average pumping rate: 225 (gallons/min)

Source of information: WFI

If not documented, how was pumping rate determined? _____

___ Pumping rate unknown

6) Is this source treated? ___ YES X NO

If so, what type of treatment:

___ disinfection ___ filtration ___ carbon filter ___ air stripper ___ other

Purpose of treatment (describe materials to be removed or controlled by treatment):

7) If source is chlorinated, is a chlorine residual maintained: ___ YES X NO

Residual level: _____ (*At the point closest to the source.*)

PART III: Hydrogeologic Information

1) Depth to top of open interval: [check one]

___ (less than) 20 ft ___ 20–50 ft ___ 50–100 ft ___ 100–200 ft ___ (greater than) 200 ft

_x_ information unavailable

2) Depth to ground water (static water level):

___ (less than) 20 ft ___ 20–50 ft ___ 50–100 ft ___ (greater than) 100 ft

_x_ flowing well/spring (artesian)

How was water level determined?

___ well log ___ other: _____

_x_ depth to ground water unknown

3) If source is a flowing well or spring, what is the confining pressure:

_____ psi (pounds per square inch)
or
__2__ feet above wellhead

4) If source is a flowing well or spring, is there a surface impoundment, reservoir, or catchment associated with this source: ___ YES _x_ NO

5) Wellhead elevation (height above mean sea level): __60__ (ft)

How was elevation determined? _x_ topographic map ___ Drilling/Well Log ___ altimeter

___ other: _____

___ information unavailable

6) Confining layers: (This can be completed only for those sources with a drilling log, well log or geologic report describing subsurface conditions. Please refer to assistance package for example.)

_x_ evidence of a confining layer in well log

___ no evidence of a confining layer in well log

If there is evidence of a confining layer, is the depth to ground water more than 20 feet above the bottom of the lowest confining layer? ___ YES ___ NO

_x_ information unavailable

7) Sanitary setback:

X (less than) 100 ft* ___ 100–120 ft ___ 120–200 ft ___ (greater than) 200 ft
* if less than 100 ft describe the site conditions:

Residential area - homes adjacent to well location

8) Wellhead construction:

X wellhead enclosed in a wellhouse

___ controlled access (describe): _____

___ other uses for wellhouse (describe): _____

___ no wellhead control

9) Surface seal:

___ 18 ft

___ (less than) 18 ft (no Department of Ecology approval)

___ (less than) 18 ft (Approved by Ecology, include documentation)

___ (greater than) 18 ft

X depth of seal unknown

___ no surface seal

10) Annual rainfall (inches per year):

___ (less than) 10 in/yr ___ 10–25 in/yr X (greater than) 25 in/yr

PART IV: Mapping Your Ground Water Resource

1) Annual volume of water pumped: 19,440,000 (gallons)

How was this determined?

___ meter

_x_ estimated: _X_ pumping rate (hours ran x well capacity

___ pump capacity (_____)

___ other: Well runs approximately 2 months out of the year.

2) "Calculated Fixed Radius" estimate of ground water movement:
(see Instruction Packet)

6 month ground water travel time : 440 (ft)

1 year ground water travel time : 620 (ft)

5 year ground water travel time: 1,390 (ft)

10 year ground water travel time: 1,970 (ft)

Information available on length of screened/open interval?

___ YES _X_ NO

Length of screened/open interval: _____ (ft)

3) Is there a river, lake, pond, stream, or other obvious surface water body within the 6 month time of travel boundary? ___ YES _X_ NO (mark and identify on map).

4) Is there a stormwater and/or wastewater facility, treatment lagoon, or holding pond located within the 6 month time of travel boundary? ___ YES _X_ NO (mark and identify on map).

Comments: _____

PART V: Assessment of Water Quality

1) Regional sources of risk to ground water:

Please indicate if any of the following are present within a circular area around your water source having a radius up to and including the five year ground water travel time:

	6 month	1 year	5 year	unknown
likely pesticide application	X			
stormwater injection wells				
other injection wells				
abandoned ground water well				
landfills, dumps, disposal areas				
known hazardous materials clean-up site				
water system(s) with known quality problems				
population density (greater than) 1 house/acre	X			
residences commonly have septic tanks				
Wastewater treatment lagoons				
sites used for land application of waste				

Mark and identify on map any of the risks listed above which are located within the 6 month time of travel boundary? (*Please include a map of the wellhead and time of travel areas with this form. Please locate and mark any of the following.*)

If other recorded or potential sources of ground water contamination exist within the ten year time of travel circular zone around your water supply, please describe:

None

2) Source specific water quality records:

Please indicate the occurrence of any test results since 1986 that meet the following conditions: (Unless listed on assessment, MCLs are listed in assistance package.)

A. Nitrate: (Nitrate MCL = 10 mg/l)	YES	NO
Results greater than MCL	___	
(less than) 2 mg/liter nitrate	X	
2–5 mg/liter nitrate	___	
(greater than) 5 mg/liter nitrate	___	
Nitrate sampling records unavailable	___	

B. VOCs: (VOC detection level 0.5 ug/l or 0.0005 mg/l.)	YES	
Results greater than MCL or SAL	___	
VOCs detected at least once	___	
VOC test performed but never detected	X	
VOC sampling records unavailable	___	

C. EDB/DBCP:	YES
(EDB MCL = 0.05 ug/l or 0.00005 mg/l. DBCP MCL = 0.2 ug/l or 0.0002 mg/l.)	
EDB/DBCP detected below MCL at least once	___
EDB/DBCP detected above MCL at least once	___
EDB/DBCP never detected	___
EDB/DBCP tests required but not yet completed	___
EDB/DBCP tests not required	___

D. Other SOCs (pesticides and other synthetic organic chemicals):	YES	NO
Other SOCs detected	___	X
Other SOC tests performed but none detected *	___	
Other SOC tests not performed	___	

*If any SOCs in addition to EDB/DBCP were detected, please identify and date. If other SOC tests were performed, but no SOCs detected, list test methods here: _____

_____

_____

_____

E. Bacterial contamination:

	YES	NO
Any bacterial detection(s) in the past 3 years in samples taken from the source (not distribution sampling records).	___	X
Has source (in past 3 years) had a bacteriological contamination problem found in distribution samples that was attributed to the source.	___	X
Source sampling records for bacteria unavailable	___	

Part VI: Geographic or Hydrologic Factors Contributing to a Non-Circular Zone of Contribution

The following questions will help identify those ground water systems which may not be accurately represented by the calculated fixed radius (CFR) method described in Part IV. For these sources, the CFR areas should be used as a preliminary delineation of the critical time of travel zones for that source. As a system develops its Wellhead Protection Plan for theses sources, a more detailed delineation method should be considered.

1)Is there evidence of obvious hydrologic boundaries within the 10 year time of travel zone of the CFR? (Does the largest circle extend over a stream, river, lake, up a steep hillside, and/or over a mountain or ridge?)

___ YES X NO

Describe with references to map produced in Part IV:

_____

_____

2) Aquifer Material:

A) Does the drilling log, well log or other geologic/engineering reports identify that the well is located in an area where the underground conditions are identified as fractured rock and/or basalt terrain?

___ YES X NO

B) Does the drilling log, well log or other geologic/engineering reports indicate that the well is located in an area where the underground conditions are primarily identified as coarse sand and gravel?

___ YES X NO

3) Is the source located in an aquifer with a high horizontal flow rate? (These can include sources located on flood plains of large rivers, artesian wells with high water pressure, and/or shallow flowing wells and springs.)

_X_ YES ___ NO

4) Are there other high capacity wells (agricultural, municipal and/or industrial) located within the CFRs?

a) Presence of ground water extraction wells removing more than approximately 500 gal/min within...

	YES	NO	unknown
6 month travel time	___	X	___
6 month–1 year travel time	___	X	___
1–5 year travel time	___	X	___
5–10 year travel time	___	X	___

b) Presence of ground water recharge wells (dry wells) or heavy irrigation within...

	YES	NO	unknown
1 year travel time	___	X	___
1–5 year travel time	___	X	___
5–10 year travel time	___	X	___

Please identify or describe additional hydrologic or geographic conditions that you believe may affect the shape of the zone of contribution for this source. Where possible, reference them to locations on the map produced in Part IV.

None

Suggestions and Comments

Did you attend one of the susceptibility workshops?	X YES	___ NO
Did you find it useful?	X YES	___ NO
Did you seek outside assistance to complete the assessment?	X YES	___ NO

This form and instruction packet are still in the process of development. Your comments, suggestions and questions will help us upgrade and improve this assessment form. If you found particular sections confusing or problematic please let us know. How could this susceptibility assessment be improved or made clearer? Did the instruction package help you find the information needed to complete the assessment? How much time did it take you to complete the form? Were you able to complete the assessment without additional/outside expertise? Do you feel the assessment was valuable as a learning experience? Any other comments or constructive criticisms you have would be appreciated.

CITY OF BLAINE
12TH STREET WELL

by Jannsen, 1929

820-S-31, T-41 N, R-1E

City of Blaine, about 25 feet west and 50 feet south of the intersection of "G" and 12th Street extended. SW¼ and SE¼, elevation about 55 feet.

	Thickness	Depth
Yellow clay	14	14
Blue clay	145	159
Gravel and clay	9	168
Gravel, cemented	2	170
Sand and gravel	30	200
Sand	11	211
Clay	1	212
Sand	16	228
Sand w/shale streaks	12	240
Sand, clay and shale	7	247

Have no SWL

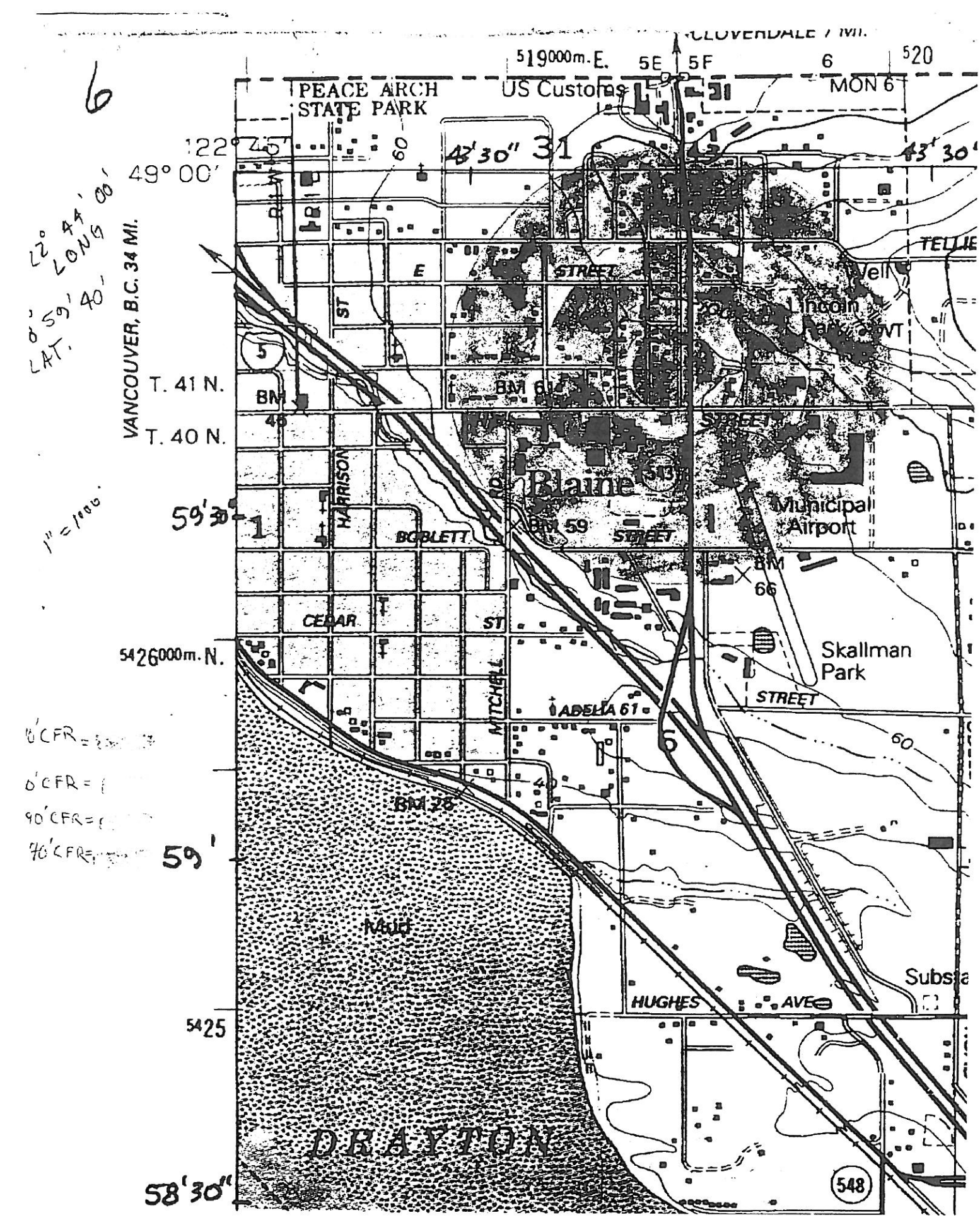
6
519000m.E.
5E
5F
6
520
PEACE ARCH
STATE PARK
US Customs
MON 6
122° 45'
49° 00'
43' 30"
31
43' 30"
22° 44' 00" LONG
0° 59' 40" LAT.
VANCOUVER, B.C. 34 MI.
T. 41 N.
T. 40 N.
1" = 1000'
59' 30"
5426000m.N.
59'
58' 30"
E STREET
ST
HARRISON
BOBLETT
CEDAR ST
MITCHELL
BM 46
BM 61
BM 59
BM 66
BM 28
Blaine
Municipal Airport
Skallman Park
STREET
ADELIA
HUGHES AVE
Lincoln Park
TELLIE
Inlet
DRAYTON
548
5425

Ground Water Contamination
Susceptibility Assessment Survey Form
Version 2.1

IMPORTANT! Please complete one form for each ground water source (well, wellfield, spring) used in your water system. Photocopy as necessary.

PART I: System Information

Well owner/manager : City of Blaine/William M. Duffy

Water system name : City of Blaine

County: Whatcom

Water system number: 07300U Source number: 08

Well depth: 375 (ft.) (*From WFI form*)

Source name: Well #6

WA well identification tag number:___ ___ ___-___ ___ ___

__X__ well not tagged

Number of connections: 1385 Population served: 3,170

Township: 40 N Range: 01 E

Section: 31 1/4 1/4 Section: SE/SE

Latitude/longitude (if available): 48° 59' 03" / 122° 41' 13"

How was lat./long. determined?

_____ global positioning device _____ survey __X__ topographic map
____other: _____

* Please refer to Assistance Packet for details and explanations of all questions in Parts II through V.

PART II: Well Construction and Source Information

1) Date well originally constructed: ___ / ___ /___ month/day/year

last reconstruction: ___ / ___ /___ month/day/year

__X__ information unavailable

2) Well driller: _____

_____

_____

___ well driller unknown

3) Type of well:

___Drilled: ___ rotary ___ bored ___ cable (percussion) ___ Dug

___ Other: ___ spring(s) ___ lateral collector (Ranney)

___ driven ___ jetted ___ other: _____

Additional comments: _____

_____

4) Well report available? _X_ YES (attach copy to form) ___ NO

If no well log is available, please attach any other records documenting well construction; e.g. boring logs, "as built" sheets, engineering reports, well reconstruction logs.

5) Average pumping rate: 165 (gallons/min)

Source of information: WFI

If not documented, how was pumping rate determined? _____

_____

___ Pumping rate unknown

6) Is this source treated?

If so, what type of treatment:

_X_ disinfection ___ filtration ___ carbon filter ___ air stripper ___ other

Purpose of treatment (describe materials to be removed or controlled by treatment):

To control possible bacterial contamination.

_____

_____

7) If source is chlorinated, is a chlorine residual maintained: _X_ YES ___ NO

Residual level: .1 to .4 mg/L (*At the point closest to the source.*)

PART III: Hydrogeologic Information

1) Depth to top of open interval: [check one]

___ < 20 ft ___ 20-50 ft ___ 50-100 ft ___ 100-200 ft X > 200 ft

___ information unavailable ('< ' *means less than;* '> ' *means greater than*)

2) Depth to ground water (static water level):

___ < 20 ft ___ 20-50 ft X 50-100 ft ___ > 100 ft

___ flowing well/spring (artesian)

How was water level determined?

___ well log X other: weekly static level checks

___ depth to ground water unknown

3) If source is a flowing well or spring, what is the confining pressure:

_____ psi (pounds per square inch)
or
_____ feet above wellhead

4) If source is a flowing well or spring, is there a surface impoundment, reservoir, or catchment associated with this source: ___ YES ___ NO

5) Wellhead elevation (height above mean sea level): 150 (ft)

How was elevation determined? ___ topographic map X Drilling/Well Log ___ altimeter

___ other: _____

___ information unavailable

6) Confining layers: (This can be completed only for those sources with a drilling log, well log or geologic report describing subsurface conditions. Please refer to assistance package for example.)

___ evidence of a confining layer in well log

X no evidence of a confining layer in well log

If there is evidence of a confining layer, is the depth to ground water more than 20 feet above the top of the open interval? ___ YES X NO

___ information unavailable

7) Sanitary setback:

___ < 100 ft* ___ 100-120 ft ___ 120-200 ft X > 200 ft
* if less than 100 ft describe the site conditions:

8) Wellhead construction:

___ wellhead enclosed in a wellhouse

X controlled access (describe): Locked gate provides limited access road 24-hours.

___ other uses for wellhouse (describe): _____

___ no wellhead control

9) Surface seal:

___ 18 ft

___ < 18 ft (no Department of Ecology approval) ('< ' *means less than*)

___ < 18 ft (Approved by Ecology, include documentation) ('< ' *means less than*)

___ > 18 ft ('> ' *means greater than*)

X depth of seal unknown

___ no surface seal

10) Annual rainfall (inches per year):

___ < 10 in/yr ___ 10-25 in/yr X > 25 in/yr

PART IV: Mapping Your Ground Water Resource

1) Annual volume of water pumped: 22,364,100 (gallons)

How was this determined?

___ meter

___ estimated: _X_ pumping rate (Hours ran x well capacity)

___ pump capacity (_____)

___ other: _____

2) "Calculated Fixed Radius" estimate of ground water movement:
(see Instruction Packet)

6 month ground water travel time : 440 (ft)

1 year ground water travel time : 620 (ft)

5 year ground water travel time: 1,390 (ft)

10 year ground water travel time: 1,970 (ft)

Information available on length of screened/open interval?

_X_ YES ___ NO

Length of screened/open interval: 10 (ft)

3) Is there a river, lake, pond, stream, or other obvious surface water body within the 6 month time of travel boundary? ___ YES _X_ NO (mark and identify on map).

4) Is there a stormwater and/or wastewater facility, treatment lagoon, or holding pond located within the 6 month time of travel boundary? ___ YES ___ NO (mark and identify on map).

Comments: There is a reservoir located in the watershed area, but we are unable to establish if it is within the six-month time of travel because of lack of open interval measurements.

PART V: Assessment of Water Quality

1) Regional sources of risk to ground water:

Please indicate if any of the following are present within a circular area around your water source having a radius up to and including the five year ground water travel time:

	6 month	1 year	5 year	unknown	
likely pesticide application				X	
stormwater injection wells					None
other injection wells	X				
abandoned ground water well			X		
landfills, dumps, disposal areas					None
known hazardous materials clean-up site					None
water system(s) with known quality problems					None
population density > 1 house/acre					None
residences commonly have septic tanks		X			
Wastewater treatment lagoons					None
sites used for land application of waste					None

Mark and identify on map any of the risks listed above which are located within the 6 month time of travel boundary? (*Please include a map of the wellhead and time of travel areas with this form. Please locate and mark any of the following.*)

If other recorded or potential sources of ground water contamination exist within the ten year time of travel circular zone around your water supply, please describe:

2) Source specific water quality records:

Please indicate the occurrence of any test results since 1986 that meet the following conditions: (Unless listed on assessment, MCLs are listed in assistance package.)

A. Nitrate: (Nitrate MCL = 10 mg/l)	YES	NO
Results greater than MCL	___	X
< 2 mg/liter nitrate	___	___
2-5 mg/liter nitrate	___	___
> 5 mg/liter nitrate	___	___
X Nitrate sampling records unavailable		

B. VOCs: (VOC detection level 0.5 ug/l or 0.0005 mg/l.)	YES	NO
Results greater than MCL or SAL	___	___
VOCs detected at least once	___	___
VOCs never detected	___	___
X VOC sampling records unavailable		

C. EDB/DBCP:	YES	NO
(EDB MCL = 0.05 ug/l or 0.00005 mg/l. DBCP MCL = 0.2 ug/l or 0.0002 mg/l.)		
EDB/DBCP detected below MCL at least once	___	___
EDB/DBCP detected above MCL at least once	___	___
EDB/DBCP never detected	___	___
___ EDB/DBCP tests required but not yet completed		
X EDB/DBCP tests not required		

D. Other SOCs (Pesticides):	YES	NO
Other SOCs detected	___	___
(pesticides and other synthetic organic chemicals)		
___ Other SOC tests performed but none detected		
(list test methods in comments		
X Other SOC tests not performed		

If any SOCs in addition to EDB/DBCP were detected, please identify and date. If other SOC tests were performed, but no SOCs detected, list test methods here: _____

_____

_____

_____

E. Bacterial contamination: YES NO

Any bacterial detection(s) in the past 3 years in samples taken from the source (not distribution sampling records). ___ ___

Has source (in past 3 years) had a bacteriological contamination problem found in distribution samples that was attributed to the source. ___ ___

X Source sampling records for bacteria unavailable

Part VI: Geographic or Hydrologic Factors Contributing to a Non-Circular Zone of Contribution

The following questions will help identify those ground water systems which may not be accurately represented by the calculated fixed radius (CFR) method described in Part IV. For these sources, the CFR areas should be used as a preliminary delineation of the critical time of travel zones for that source. As a system develops its Wellhead Protection Plan for theses sources, a more detailed delineation method should be considered.

1) Is there evidence of obvious hydrologic boundaries within the 10 year time of travel zone of the CFR? (Does the largest circle extend over a stream, river, lake, up a steep hillside, and/or over a mountain or ridge?)

X YES ___ NO

Describe with references to map produced in Part IV:

Pond

2) Aquifer Material:

A) Does the drilling log, well log or other geologic/engineering reports identify that the well is located in an area where the underground conditions are identified as fractured rock and/or basalt terrain?

___ YES X NO

B) Does the drilling log, well log or other geologic/engineering reports indicate that the well is located in an area where the underground conditions are primarily identified as coarse sand and gravel?

X YES ___ NO

3) Is the source located in an aquifer with a high horizontal flow rate? (These can include sources located on flood plains of large rivers, artesian wells with high water pressure, and/or shallow flowing wells and springs.)

___ YES _X_ NO

4) Are there other high capacity wells (agricultural, municipal and/or industrial) located within the CFRs?

a) Presence of ground water extraction wells removing more than approximately 500 gal/min within...

	YES	NO	unknown
< 6 month travel time	___	X	___
6 month–1 year travel time	___	X	___
1–5 year travel time	___	X	___
5–10 year travel time	___	X	___

b) Presence of ground water recharge wells (dry wells) or heavy irrigation within...

	YES	NO	unknown
< 1 year travel time	___	X	___
1–5 year travel time	___	X	___
5–10 year travel time	___	X	___

Please identify or describe additional hydrologic or geographic conditions that you believe may affect the shape of the zone of contribution for this source. Where possible, reference them to locations on the map produced in Part IV.

Suggestions and Comments

Did you attend one of the susceptibility workshops? _X_ YES ___ NO

Did you find it useful? _X_ YES ___ NO

Did you seek outside assistance to complete the assessment? _X_ YES ___ NO

This form and instruction packet are still in the process of development. Your comments, suggestions and questions will help us upgrade and improve this assessment form. If you found particular sections confusing or problematic please let us know. How could this susceptibility assessment be improved or made clearer? Did the instruction package help you find the information needed to complete the assessment? How much time did it take you to complete the form? Were you able to complete the assessment without additional/outside expertise? Do you feel the assessment was valuable as a learning experience? Any other comments or constructive criticisms you have would be appreciated.

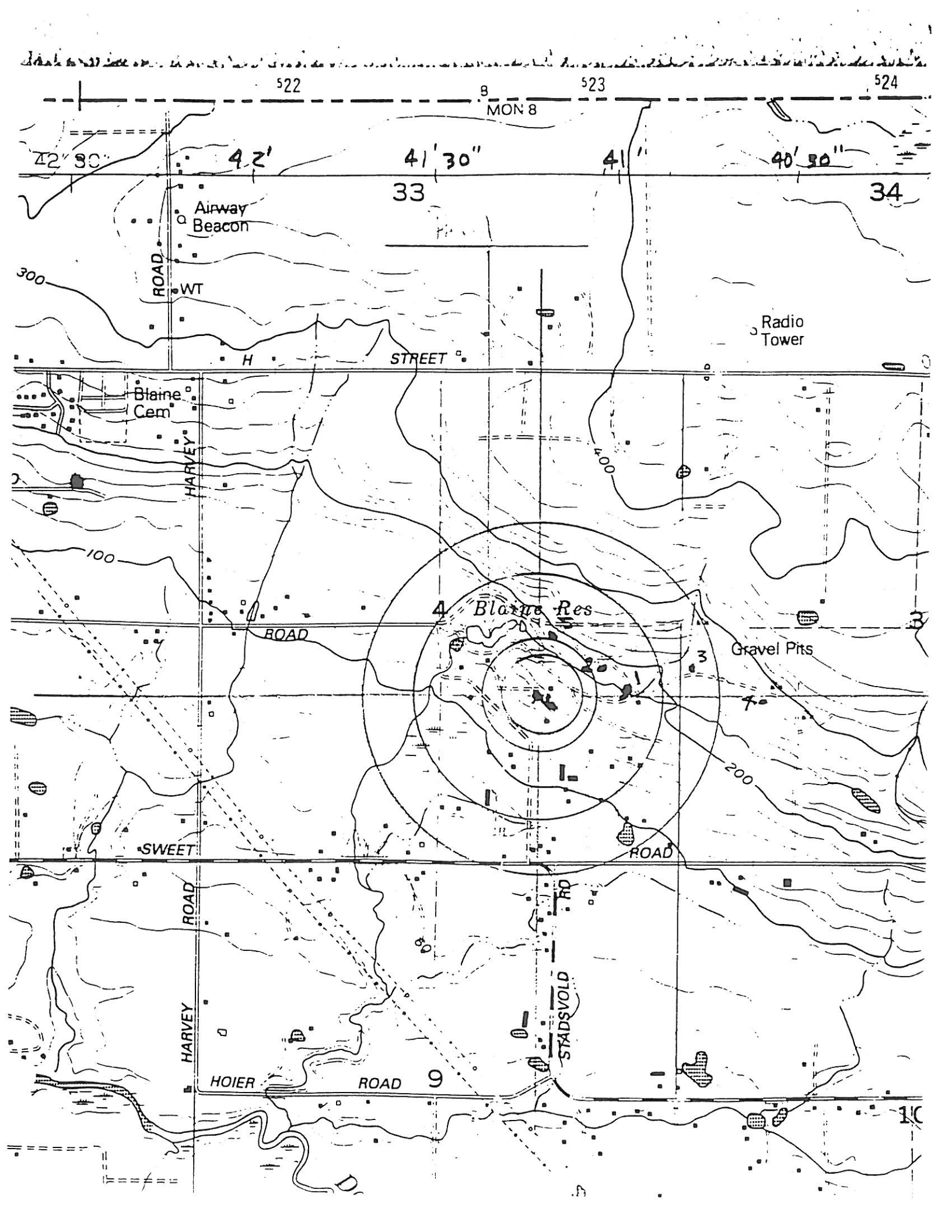
522
8
MON 8
523
524
42' 30"
42'
41' 30"
41'
40' 30"
33
34
Airway Beacon
ROAD
WT
300
Radio Tower
H
STREET
Blaine Cem
HARVEY
400
100
4 Blaine Res
ROAD
Gravel Pits
200
SWEET
ROAD
ROAD
RD
60
STADSVOLD
HARVEY
HOIER
ROAD
9
10

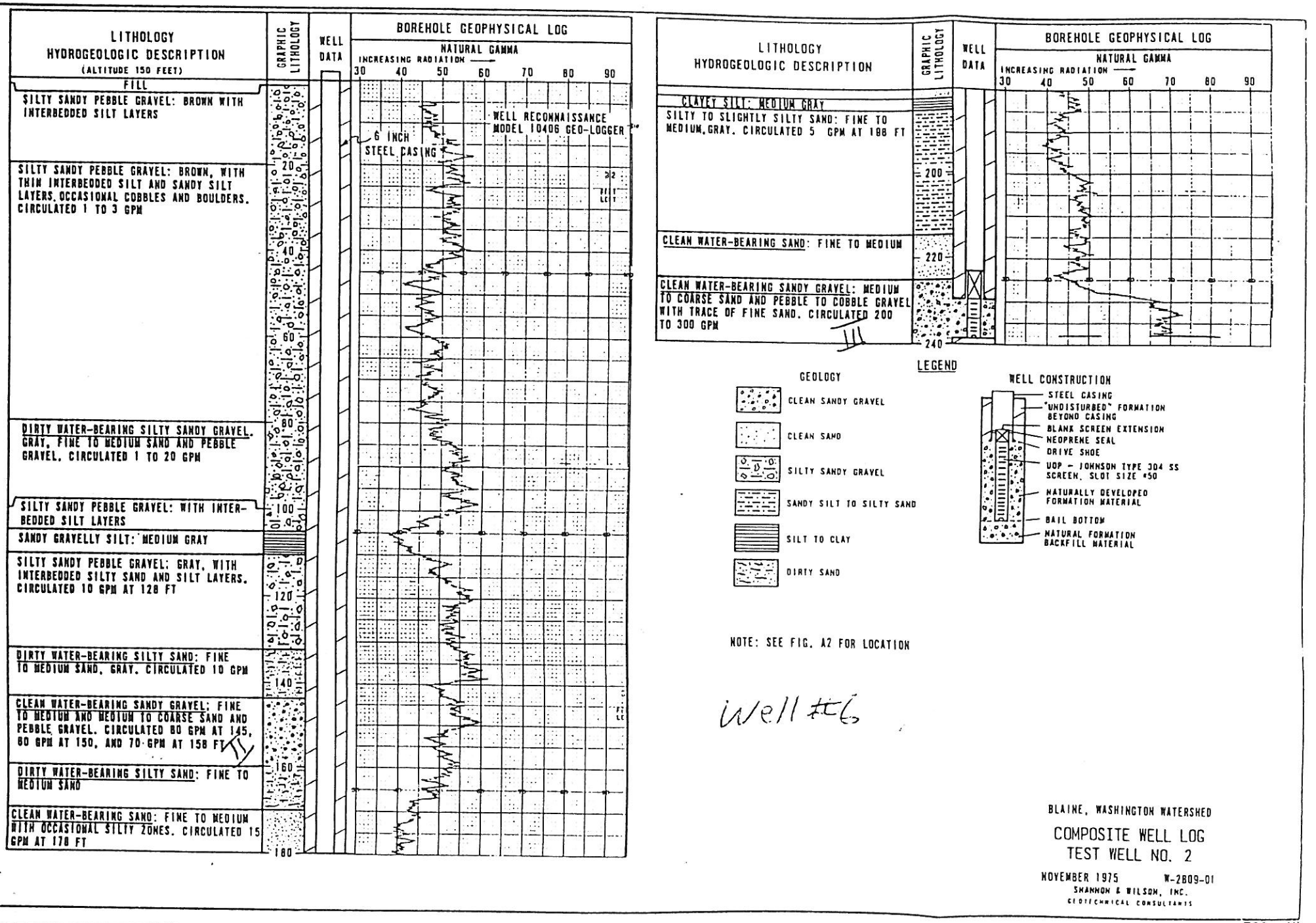
LITHOLOGY
HYDROGEOLOGIC DESCRIPTION
(ALTITUDE 150 FEET)
GRAPHIC LITHOLOGY
WELL DATA
BOREHOLE GEOPHYSICAL LOG
NATURAL GAMMA
INCREASING RADIATION
30 40 50 60 70 80 90
FILL
SILTY SANDY PEBBLE GRAVEL: BROWN WITH INTERBEDDED SILT LAYERS
SILTY SANDY PEBBLE GRAVEL: BROWN, WITH THIN INTERBEDDED SILT AND SANDY SILT LAYERS. OCCASIONAL COBBLES AND BOULDERS. CIRCULATED 1 TO 3 GPM
DIRTY WATER-BEARING SILTY SANDY GRAVEL. GRAY, FINE TO MEDIUM SAND AND PEBBLE GRAVEL. CIRCULATED 1 TO 20 GPM
SILTY SANDY PEBBLE GRAVEL: WITH INTERBEDDED SILT LAYERS
SANDY GRAVELLY SILT: MEDIUM GRAY
SILTY SANDY PEBBLE GRAVEL: GRAY, WITH INTERBEDDED SILTY SAND AND SILT LAYERS. CIRCULATED 10 GPM AT 128 FT
DIRTY WATER-BEARING SILTY SAND: FINE TO MEDIUM SAND, GRAY. CIRCULATED 10 GPM
CLEAN WATER-BEARING SANDY GRAVEL: FINE TO MEDIUM AND MEDIUM TO COARSE SAND AND PEBBLE GRAVEL. CIRCULATED 80 GPM AT 145, 80 GPM AT 150, AND 70 GPM AT 158 FT
DIRTY WATER-BEARING SILTY SAND: FINE TO MEDIUM SAND
CLEAN WATER-BEARING SAND: FINE TO MEDIUM WITH OCCASIONAL SILTY ZONES. CIRCULATED 15 GPM AT 178 FT
20
40
60
80
100
120
140
160
180
WELL RECONNAISSANCE MODEL 10406 GEO-LOGGER
6 INCH STEEL CASING
LITHOLOGY
HYDROGEOLOGIC DESCRIPTION
GRAPHIC LITHOLOGY
WELL DATA
BOREHOLE GEOPHYSICAL LOG
NATURAL GAMMA
INCREASING RADIATION
30 40 50 60 70 80 90
CLAYEY SILT: MEDIUM GRAY
SILTY TO SLIGHTLY SILTY SAND: FINE TO MEDIUM, GRAY. CIRCULATED 5 GPM AT 188 FT
CLEAN WATER-BEARING SAND: FINE TO MEDIUM
CLEAN WATER-BEARING SANDY GRAVEL: MEDIUM TO COARSE SAND AND PEBBLE TO COBBLE GRAVEL WITH TRACE OF FINE SAND. CIRCULATED 200 TO 300 GPM
200
220
240
LEGEND
GEOLOGY
CLEAN SANDY GRAVEL
CLEAN SAND
SILTY SANDY GRAVEL
SANDY SILT TO SILTY SAND
SILT TO CLAY
DIRTY SAND
WELL CONSTRUCTION
STEEL CASING
"UNDISTURBED" FORMATION BEYOND CASING
BLANK SCREEN EXTENSION
NEOPRENE SEAL
DRIVE SHOE
UOP - JOHNSON TYPE 304 SS SCREEN, SLOT SIZE #50
NATURALLY DEVELOPED FORMATION MATERIAL
BAIL BOTTOM
NATURAL FORMATION BACKFILL MATERIAL
NOTE: SEE FIG. A2 FOR LOCATION
Well #6
BLAINE, WASHINGTON WATERSHED
COMPOSITE WELL LOG
TEST WELL NO. 2
NOVEMBER 1975
W-2809-01
SHANNON & WILSON, INC.
GEOTECHNICAL CONSULTANTS

FIG. A4

Ground Water Contamination
Susceptibility Assessment Survey Form
Version 2.2

IMPORTANT! Please complete one form for each ground water source (well, wellfield, spring) used in your water system.
Photocopy as necessary.

PART I: System Information

Well owner/manager : **City of Blaine/Leroy Dougall**

Water system name : **City of Blaine**

County: **Whatcom**

Water system number: **07300U** Source number: **S10**

Well depth: **718** (ft.) (*From WFI form*)

Source name: **S10/1r**

WA well identification tag number:___ ___ ___-_ _ _

X_____ well not tagged

Number of connections: **1,948** Population served: **3,175**

Township: **40N** Range: **01E**

Section: **31** 1/4 1/4 Section: **SE/SE**

Latitude/longitude (if available): _____/_____

How was lat./long. determined?

_____ global positioning device _____ survey _____ topographic map
___other: _____

* Please refer to Assistance Packet for details and explanations of all questions in Parts II through V.

PART II: Well Construction and Source Information

1) Date well originally constructed: ~~Between 7/95 to 10/95~~ 10/31/95 month/day/year

last reconstruction: __ / __ /__ month/day/year

_____ information unavailable

2) Well driller: **Charon Drilling of Graham, Washington**

__ well driller unknown

3) Type of well:

__Drilled: __ rotary __ bored __X__ cable (percussion) __ Dug

__ Other: __ spring(s) __ lateral collector (Ranney)

__ driven __ jetted __ other: _____

Additional comments: **SpeedStar 72 cable tool drilling rig**

4) Well report available? __X__ YES (attach copy to form) __ NO

If no well log is available, please attach any other records documenting well construction; e.g. boring logs, "as built" sheets, engineering reports, well reconstruction logs.

5) Average pumping rate: **500** (gallons/min)

Source of information: **WFI**

If not documented, how was pumping rate determined? _____

__ Pumping rate unknown

6) Is this source treated?

If so, what type of treatment: ***Please note below**

__ disinfection __ filtration __ carbon filter __ air stripper __X__ other

Purpose of treatment (describe materials to be removed or controlled by treatment):

This source is not treated at the well head but mixed with potable water from other City of Blaine sources than Chlorinated. Chlorine applied to Kill possible bacteriological contamination.

7) If source is chlorinated, is a chlorine residual maintained: X YES X NO

Residual level: _____ (*At the point closest to the source.*)* Need to verify this information

PART III: Hydrogeologic Information

1) Depth to top of open interval: [check one]

__ < 20 ft __ 20–50 ft __ 50–100 ft __ 100–200 ft _X_ >200 ft

__ information unavailable (*'<' means less than; '>' means greater than*)

2) Depth to ground water (static water level):

__ < 20 ft __ 20–50 ft __ 50–100 ft _X_ >100 ft

__ flowing well/spring (artesian)

How was water level determined?

_X_ well log __ other: _____

__ depth to ground water unknown

3) If source is a flowing well or spring, what is the confining pressure: N/A

_____ psi (pounds per square inch)
or
_____ feet above wellhead

4) If source is a flowing well or spring, is there a surface impoundment, reservoir, or catchment associated with this source: __ YES __ NO N/A

5) Wellhead elevation (height above mean sea level): **200** (ft)

How was elevation determined? _X_ topographic map __ Drilling/Well Log __ altimeter

__ other: _____

__ information unavailable

6) Confining layers: (This can be completed only for those sources with a drilling log, well log or geologic report describing subsurface conditions. Please refer to assistance package for example.)

_X_ evidence of a confining layer in well log

__ no evidence of a confining layer in well log

If there is evidence of a confining layer, is the depth to ground water more than 20 feet above the **bottom** of the **lowest confining layer**? _X_ YES __ NO

__ information unavailable

7) Sanitary setback:

__ < 100 ft* __ 100–120 ft __ 120–200 ft __X__ > 200 ft

* if less than 100 ft describe the site conditions:

_____

_____

_____

_____

8) Wellhead construction:

__ wellhead enclosed in a wellhouse

__X__ controlled access (describe): **Limited access road only accessible via 24 hour locked gate, Wellhead and controlsare within a fenced area with locked gate.**

_____

__ other uses for wellhouse (describe): **No other uses**

_____

__ no wellhead control

9) Surface seal:

__X__ 18 ft

__ < 18 ft (no Department of Ecology approval) ('<' *means less than*)

__ < 18 ft (Approved by Ecology, include documentation) ('<' *means less than*)

__ > 18 ft ('>' *means greater than*)

__ depth of seal unknown

__ no surface seal

10) Annual rainfall (inches per year):

__ < 10 in/yr __ 10–25 in/yr __X__ > 25 in/yr

PART IV: Mapping Your Ground Water Resource

1) Annual volume of water pumped: **39,213,00** (gallons)

How was this determined?

X meter

__ estimated: __ pumping rate (_____)

__ pump capacity (_____)

__ other: _____

2) "Calculated Fixed Radius" estimate of ground water movement:
(see Instruction Packet)

6 month ground water travel time : **440'** (ft)

1 year ground water travel time : **620'** (ft)

5 year ground water travel time: **1,390** (ft)

10 year ground water travel time: **1,970** (ft)

Information available on length of screened/open interval?

X YES _ NO

Length of screened/open interval: **24'** (ft)

3) Is there a river, lake, pond, stream, or other obvious surface water body within the 6 month time of travel boundary? __ YES __ NO (mark and identify on map).

4) Is there a stormwater and/or wastewater facility, treatment lagoon, or holding pond located within the 6 month time of travel boundary? __ YES **X** NO (mark and identify on map).

Comments: _____

_____

_____

_____

_____

PART V: Assessment of Water Quality

1) Regional sources of risk to ground water:

Please indicate if any of the following are present within a circular area around your water source having a radius up to and including the five year ground water travel time:

	6 month	1 year	5 year	unknown
likely pesticide application				
stormwater injection wells				
other injection wells				
abandoned ground water well	X		X	
landfills, dumps, disposal areas				
known hazardous materials clean-up site				
water system(s) with known quality problems				
population density > 1 house/acre				
residences commonly have septic tanks			X	
Wastewater treatment lagoons				
sites used for land application of waste				

Mark and identify on map any of the risks listed above which are located within the 6 month time of travel boundary? (*Please include a map of the wellhead and time of travel areas with this form. Please locate and mark any of the following.*)

If other recorded or potential sources of ground water contamination exist within the ten year time of travel circular zone around your water supply, please describe:

_____

_____

_____

_____

_____

_____

2) Source specific water quality records:

Please indicate the occurrence of any test results since 1986 that meet the following conditions: (Unless listed on assessment, MCLs are listed in assistance package.)

A. Nitrate: (Nitrate MCL = 10 mg/l)	YES	NO
Results greater than MCL	____	__X__
< 2 mg/liter nitrate	__X__	____
2–5 mg/liter nitrate	____	__X__
> 5 mg/liter nitrate	____	__X__
Nitrate sampling records unavailable	____	__X__

B. VOCs: (VOC detection level 0.5 ug/l or 0.0005 mg/l.)	YES	NO
Results greater than MCL or SAL	____	__X__
VOCs detected at least once	____	__X__
VOCs never detected	__X__	____
VOC sampling records unavailable	____	__X__

C. EDB/DBCP:	YES	NO
(EDB MCL = 0.05 ug/l or 0.00005 mg/l. DBCP MCL = 0.2 ug/l or 0.0002 mg/l.)		
EDB/DBCP detected below MCL at least once	____	__X__
EDB/DBCP detected above MCL at least once	____	__X__
EDB/DBCP never detected	__X__	____
EDB/DBCP tests required but not yet completed		X
EDB/DBCP tests not required	____	__X__

D. Other SOCs (Pesticides):	YES	NO
Other SOCs detected	____	__X__

(pesticides and other synthetic organic chemicals)

__X__Other SOC tests performed but none detected

(list test methods in comments)

____Other SOC tests not performed

If any SOCs in addition to EDB/DBCP were detected, please identify and date. If other SOC tests were performed, but no SOCs detected, list test methods here: **Method 515 (pesticides) Method 525 (herbicides) Method 531 (Insecticides)**

E. Bacterial contamination:

	YES	NO
Any bacterial detection(s) in the past 3 years in samples taken from the source (not distribution sampling records).	____	X
Has source (in past 3 years) had a bacteriological contamination problem found in distribution samples that was attributed to the source.	____	~~X~~
Source sampling records for bacteria unavailable ...	⊗	

need to check HPC

Part VI: Geographic or Hydrologic Factors Contributing to a Non-Circular Zone of Contribution

The following questions will help identify those ground water systems which may not be accurately represented by the calculated fixed radius (CFR) method described in Part IV. For these sources, the CFR areas should be used as a preliminary delineation of the critical time of travel zones for that source. As a system develops its Wellhead Protection Plan for theses sources, a more detailed delineation method should be considered.

1) Is there evidence of obvious hydrologic boundaries within the 10 year time of travel zone of the CFR? (Does the largest circle extend over a stream, river, lake, up a steep hillside, and/or over a mountain or ridge?)
*** Need map from Engineering Department to ascertain**

__ YES __ NO

Describe with references to map produced in Part IV:

_____

_____

2) Aquifer Material:

A) Does the drilling log, well log or other geologic/engineering reports identify that the well is located in an area where the underground conditions are identified as fractured rock and/or basalt terrain?

__ YES X NO

B) Does the drilling log, well log or other geologic/engineering reports indicate that the well is located in an area where the underground conditions are primarily identified as coarse sand and gravel?

__ YES X NO

3) Is the source located in an aquifer with a high horizontal flow rate? (These can include sources located on flood plains of large rivers, artesian wells with high water pressure, and/or shallow flowing wells and springs.)

__ YES __X__ NO

4) Are there other high capacity wells (agricultural, municipal and/or industrial) located within the CFRs?

a) Presence of ground water extraction wells removing more than approximately 500 gal/min within...

	YES	NO	unknown
< 6 month travel time	_X_	___	____
6 month–1 year travel time	_X_	___	____
1–5 year travel time	_X	___	____
5–10 year travel time	_X_	___	____

b) Presence of ground water recharge wells (dry wells) or heavy irrigation within...

	YES	NO	unknown
< 1 year travel time	___	_X_	____
1–5 year travel time	___	_X_	____
5–10 year travel time	___	_X_	____

Please identify or describe additional hydrologic or geographic conditions that you believe may affect the shape of the zone of contribution for this source. Where possible, reference them to locations on the map produced in Part IV.

_____

_____

_____

_____

_____

_____

_____

_____

Suggestions and Comments

Did you attend one of the susceptibility workshops? _X_ YES __ NO

Did you find it useful? _X_ YES __ NO

Did you seek outside assistance to complete the assessment? __ YES _X_ NO

This form and instruction packet are still in the process of development. Your comments, suggestions and questions will help us upgrade and improve this assessment form. If you found particular sections confusing or problematic please let us know. How could this susceptibility assessment be improved or made clearer? Did the instruction package help you find the information needed to complete the assessment? How much time did it take you to complete the form? Were you able to complete the assessment without additional/outside expertise? Do you feel the assessment was valuable as a learning experience? Any other comments or constructive criticisms you have would be appreciated.

_____

_____

_____

_____

_____

_____

_____

_____

_____

_____

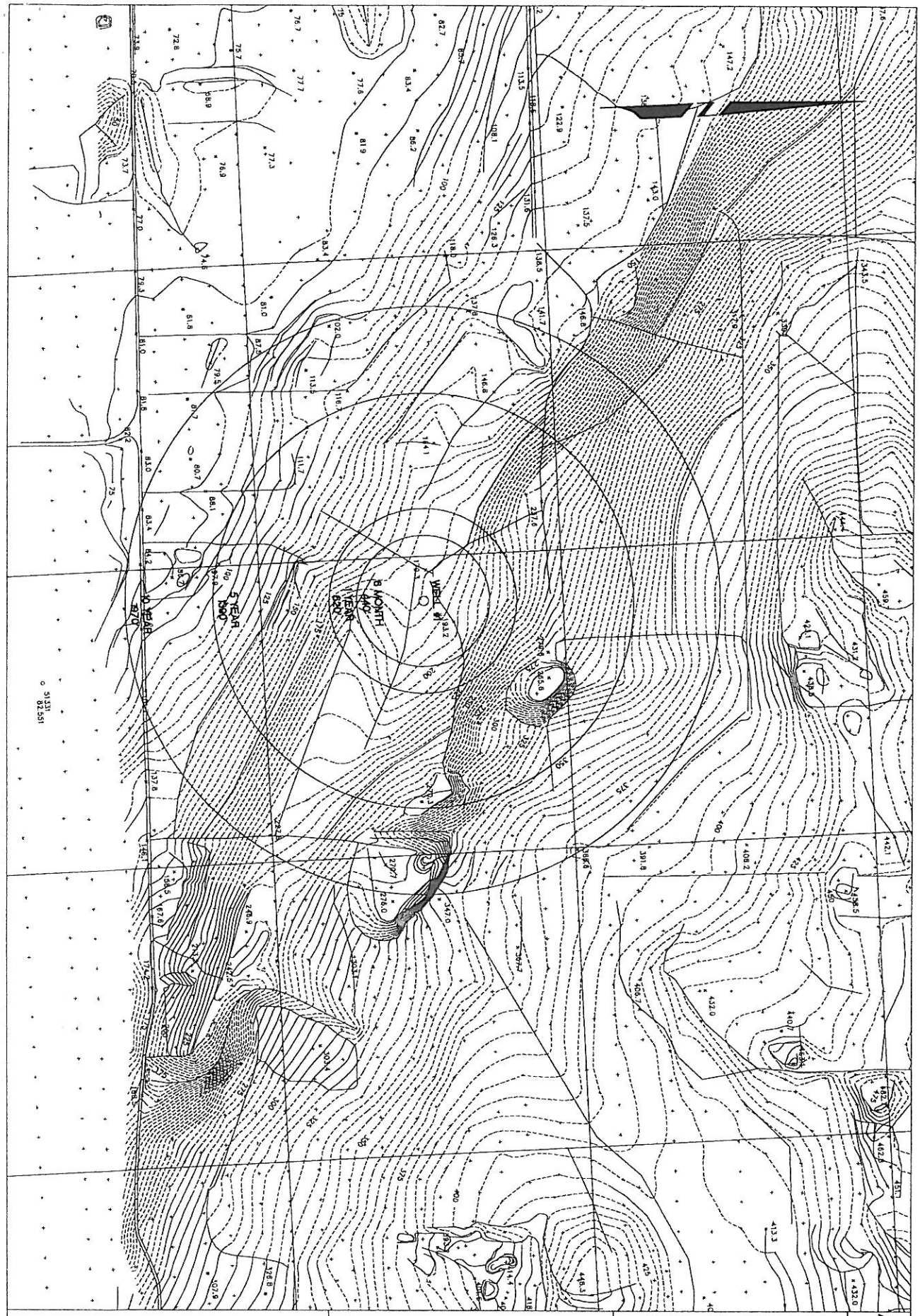

NO.	REVISION DESCRIPTION	PRP'D	CHK'D	APP'D	DATE
A	FOR REVIEW	TAMc			02/26/0

CITY OF BLAINE GROUND WATER RESOURCE – WELL 1

CITY OF BLAINE
PUBLIC WORKS DEPARTMENT

SIZE	PREV. DWG NO.	PUBLIC WORKS DRAWING NUMBER
B		
SCALE NONE	SHEET	OF

Ground Water Contamination
Susceptibility Assessment Survey Form
Version 2.2

IMPORTANT! Please complete one form for each ground water source (well, wellfield, spring) used in your water system.
Photocopy as necessary.

PART I: System Information

Well owner/manager : **City of Blaine/Lerov Dougall**

Water system name : **City of Blaine**

County: **Whatcom**

Water system number: **07300U** Source number: **S11**

Well depth. **650** (ft.) (*From WFI form*)

Source name: **S11/3r**

WA well identification tag number: ___ ___ ___ - ___ ___

X_____ well not tagged

Number of connections: **1,948** Population served: **3,175**

Township: **40N** Range: **01E**

Section: **04** 1/4 1/4 Section: **NE/SE**

Latitude/longitude (if available): _____ / _____

How was lat./long. determined?

_____ global positioning device _____ survey _____ topographic map
___other: _____

* Please refer to Assistance Packet for details and explanations of all questions in Parts II through V.

PART II: Well Construction and Source Information

1) Date well originally constructed: ~~10~~ 4 / ~~27~~ 20 / ~~97~~ 98 month/day/year

last reconstruction: __ / __ / __ month/day/year

_____ information unavailable

2) Well driller: **Holt Drilling**

__ well driller unknown

3) Type of well:

__Drilled: __ rotary __ bored __X__ cable (percussion) __ Dug

__ Other: __ spring(s) __ lateral collector (Ranney)

__ driven __ jetted __ other: _____

Additional comments: **16" cable tool to 405', 12" cable tool from 405" to bottom of well 854'**

4) Well report available? __X__ YES (attach copy to form) __ NO

If no well log is available, please attach any other records documenting well construction; e.g. boring logs, "as built" sheets, engineering reports, well reconstruction logs.

5) Average pumping rate: **500** (gallons/min)

Source of information: **WFI**

If not documented, how was pumping rate determined? _____

__ Pumping rate unknown

6) Is this source treated?

If so, what type of treatment: ***Please note below**

__ disinfection __ filtration __ carbon filter __ air stripper __X__ other

Purpose of treatment (describe materials to be removed or controlled by treatment):

This source is not treated at the well head but mixed with potable water from other City of Blaine sources than Chlorinated. Chlorine applied to Kill possible bacteriological contamination.

7) If source is chlorinated, is a chlorine residual maintained: X YES NO NO

Residual level: _____ (*At the point closest to the source.*)* Need to verify this information

PART III: Hydrogeologic Information

1) Depth to top of open interval: [check one]

__ < 20 ft __ 20–50 ft __ 50–100 ft __ 100–200 ft X >200 ft

__ information unavailable (*'<' means less than; '>' means greater than*)

2) Depth to ground water (static water level):

__ < 20 ft __ 20–50 ft __ 50–100 ft X >100 ft

__ flowing well/spring (artesian)

How was water level determined?

X well log __ other: _____

_ depth to ground water unknown

3) If source is a flowing well or spring, what is the confining pressure· N/A

_____ psi (pounds per square inch)
or
_____ feet above wellhead

4) If source is a flowing well or spring, is there a surface impoundment, reservoir, or catchment associated with this source: __ YES __ NO N/A

5) Wellhead elevation (height above mean sea level): 200 (ft)

How was elevation determined? X topographic map __ Drilling/Well Log __ altimeter

__ other: _____

__ information unavailable

6) Confining layers: (This can be completed only for those sources with a drilling log, well log or geologic report describing subsurface conditions. Please refer to assistance package for example.)

X evidence of a confining layer in well log

__ no evidence of a confining layer in well log

If there is evidence of a confining layer, is the depth to ground water more than 20 feet above the **bottom** of the **lowest confining layer**? X YES __ NO

__ information unavailable

7) Sanitary setback:

__ < 100 ft* __ 100–120 ft __ 120–200 ft __X__ > 200 ft
* if less than 100 ft describe the site conditions:

8) Wellhead construction:

__ wellhead enclosed in a wellhouse

__X__ controlled access (describe): **Limited access road only accessible via 24 hour locked gate, Wellhead and control are within a fenced area with locked gate.**

__ other uses for wellhouse (describe): **No other uses**

__ no wellhead control

9) Surface seal:

__X__ 18 ft

__ < 18 ft (no Department of Ecology approval) *('<' means less than)*

__ < 18 ft (Approved by Ecology, include documentation) *('<' means less than)*

__ > 18 ft *('>' means greater than)*

__ depth of seal unknown

__ no surface seal

10) Annual rainfall (inches per year):

__ < 10 in/yr __ 10–25 in/yr __X__ > 25 in/yr

PART IV: Mapping Your Ground Water Resource

1) Annual volume of water pumped: **75,000,000** (gallons)

How was this determined?

_X_ meter

__ estimated: __ pumping rate (_____)

__ pump capacity (_____)

__ other: _____

2) "Calculated Fixed Radius" estimate of ground water movement:
(see Instruction Packet)

6 month ground water travel time : **440'** (ft)

1 year ground water travel time : **620'** (ft)

5 year ground water travel time: **1,390** (ft)

10 year ground water travel time: **1,970** (ft)

Information available on length of screened/open interval?

_X_ YES __ NO

Length of screened/open interval: **50'** (ft)

3) Is there a river, lake, pond, stream, or other obvious surface water body within the 6 month time of travel boundary? __ YES __ NO (mark and identify on map).

4) Is there a stormwater and/or wastewater facility, treatment lagoon, or holding pond located within the 6 month time of travel boundary? __ YES _X_ NO (mark and identify on map).

Comments: _____

_____

_____

_____

_____

PART V: Assessment of Water Quality

1) Regional sources of risk to ground water:

Please indicate if any of the following are present within a circular area around your water source having a radius up to and including the five year ground water travel time:

	6 month	1 year	5 year	unknown
likely pesticide application				
stormwater injection wells				
other injection wells				
abandoned ground water well	X		X	
landfills, dumps, disposal areas				
known hazardous materials clean-up site				
water system(s) with known quality problems				
population density > 1 house/acre				
residences commonly have septic tanks			X?	
Wastewater treatment lagoons				
sites used for land application of waste				

Mark and identify on map any of the risks listed above which are located within the 6 month time of travel boundary? (*Please include a map of the wellhead and time of travel areas with this form. Please locate and mark any of the following.*)

If other recorded or potential sources of ground water contamination exist within the ten year time of travel circular zone around your water supply, please describe:

2) Source specific water quality records:

Please indicate the occurrence of any test results since 1986 that meet the following conditions: (Unless listed on assessment, MCLs are listed in assistance package.)

A. Nitrate: (Nitrate MCL = 10 mg/l)	YES	NO
Results greater than MCL	____	__X__
< 2 mg/liter nitrate	__X__	____
2–5 mg/liter nitrate	____	__X__
> 5 mg/liter nitrate	____	__X__
Nitrate sampling records unavailable	____	__X__

B. VOCs: (VOC detection level 0.5 ug/l or 0.0005 mg/l.)	YES	NO
Results greater than MCL or SAL	____	__X__
VOCs detected at least once	____	__X__
VOCs never detected	__X__	____
VOC sampling records unavailable	____	__X__

C. EDB/DBCP:	YES	NO
(EDB MCL = 0.05 ug/l or 0.00005 mg/l. DBCP MCL = 0.2 ug/l or 0.0002 mg/l.)		
EDB/DBCP detected below MCL at least once	____	__X__
EDB/DBCP detected above MCL at least once	____	__X__
EDB/DBCP never detected	__X__	____
EDB/DBCP tests required but not yet completed		X
EDB/DBCP tests not required	____	__X__

D. Other SOCs (Pesticides):	YES	NO
Other SOCs detected	____	__X__
(pesticides and other synthetic organic chemicals)		

__X__Other SOC tests performed but none detected

(list test methods in comments)

____Other SOC tests not performed

If any SOCs in addition to EDB/DBCP were detected, please identify and date. If other SOC tests were performed, but no SOCs detected, list test methods here: **Method 515 (pesticides) Method 525 (herbicides) Method 531 (Insecticides)**

E. Bacterial contamination:

	YES	NO
Any bacterial detection(s) in the past 3 years in samples taken from the source (not distribution sampling records).	____	__X__
Has source (in past 3 years) had a bacteriological contamination problem found in distribution samples that was attributed to the source.	____	__X__

Source sampling records for bacteria unavailable ... X

Part VI: Geographic or Hydrologic Factors Contributing to a Non-Circular Zone of Contribution

The following questions will help identify those ground water systems which may not be accurately represented by the calculated fixed radius (CFR) method described in Part IV. For these sources, the CFR areas should be used as a preliminary delineation of the critical time of travel zones for that source. As a system develops its Wellhead Protection Plan for theses sources, a more detailed delineation method should be considered.

1) Is there evidence of obvious hydrologic boundaries within the 10 year time of travel zone of the CFR? (Does the largest circle extend over a stream, river, lake, up a steep hillside, and/or over a mountain or ridge?)
*** Need map from Engineering Department to ascertain**

X YES __ NO

Describe with references to map produced in Part IV:

There is a small pond and stream within the 10 year time of travel Zone

2) Aquifer Material:

A) Does the drilling log, well log or other geologic/engineering reports identify that the well is located in an area where the underground conditions are identified as fractured rock and/or basalt terrain?

__ YES X NO

B) Does the drilling log, well log or other geologic/engineering reports indicate that the well is located in an area where the underground conditions are primarily identified as coarse sand and gravel?

__ YES X NO

3) Is the source located in an aquifer with a high horizontal flow rate? (These can include sources located on flood plains of large rivers, artesian wells with high water pressure, and/or shallow flowing wells and springs.)

__ YES _X_ NO

4) Are there other high capacity wells (agricultural, municipal and/or industrial) located within the CFRs?

a) Presence of ground water extraction wells removing more than approximately 500 gal/min within...

	YES	NO	unknown
< 6 month travel time	_X_	___	____
6 month–1 year travel time	_X_	___	____
1–5 year travel time	_X	___	____
5–10 year travel time	_X_	___	____

b) Presence of ground water recharge wells (dry wells) or heavy irrigation within...

	YES	NO	unknown
< 1 year travel time	___	_X_	____
1–5 year travel time	___	_X_	____
5–10 year travel time	___	_X_	____

Please identify or describe additional hydrologic or geographic conditions that you believe may affect the shape of the zone of contribution for this source. Where possible, reference them to locations on the map produced in Part IV.

Suggestions and Comments

Did you attend one of the susceptibility workshops? _X_ YES __ NO

Did you find it useful? _X_ YES __ NO

Did you seek outside assistance to complete the assessment? __ YES _X_ NO

This form and instruction packet are still in the process of development. Your comments, suggestions and questions will help us upgrade and improve this assessment form. If you found particular sections confusing or problematic please let us know. How could this susceptibility assessment be improved or made clearer? Did the instruction package help you find the information needed to complete the assessment? How much time did it take you to complete the form? Were you able to complete the assessment without additional/outside expertise? Do you feel the assessment was valuable as a learning experience? Any other comments or constructive criticisms you have would be appreciated.

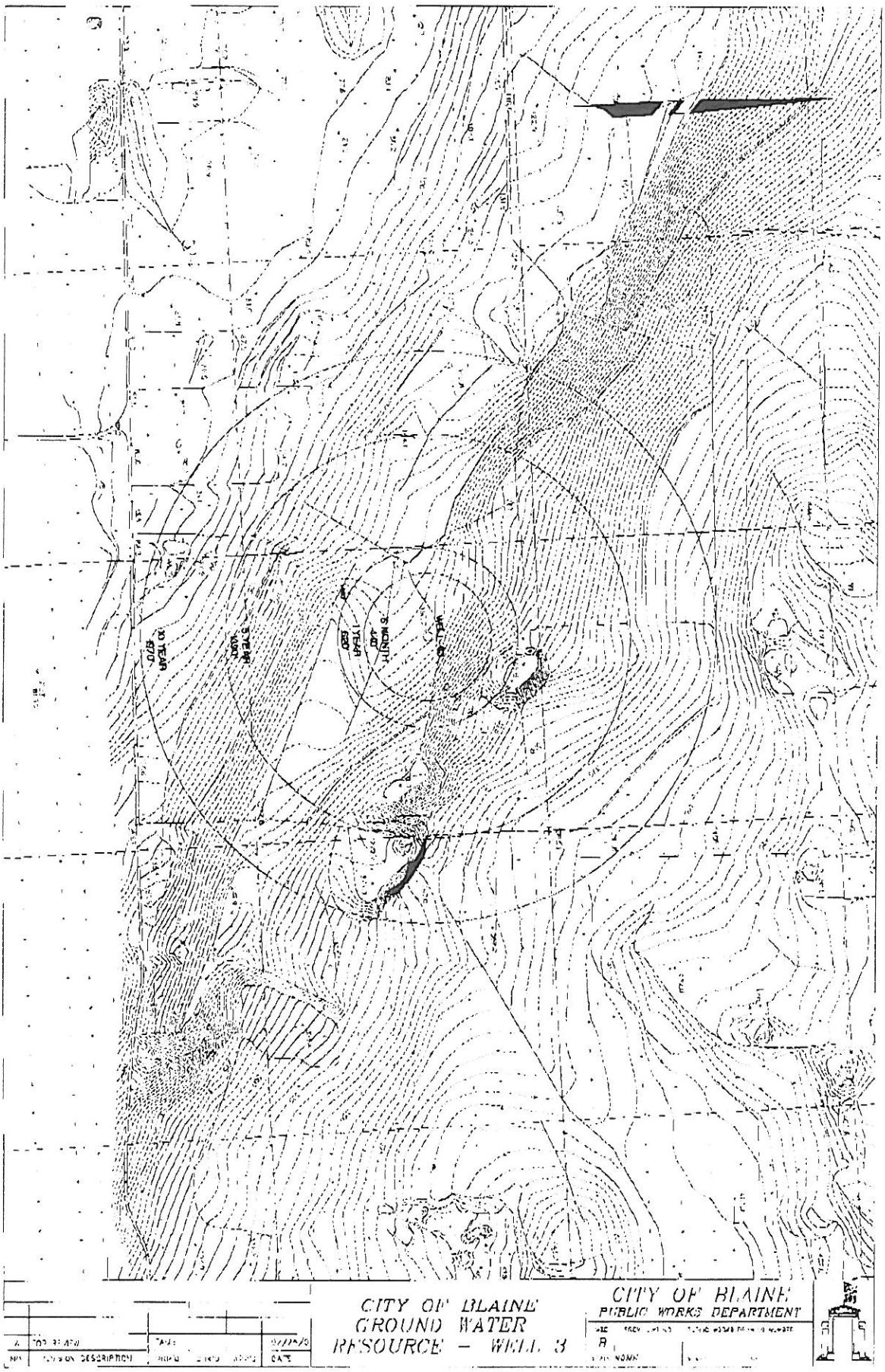

CITY OF BLAINE
GROUND WATER
RESOURCE – WELL 3

CITY OF BLAINE
PUBLIC WORKS DEPARTMENT

Ground Water Contamination
Susceptibility Assessment Survey Form

IMPORTANT! Please complete one form for each ground water source (well, wellfield, spring) used in your water system. Photocopy as necessary.

PART I: System Information

Well owner/manager: City of Blaine

Water system name: City of Blaine

County: Whatcom

Water system number: 073004 Source number: to be assigned

Well depth: 800 (ft.)

Source name: PW - 5.1

WA well identification tag number: _ _ _ - _ _ _

___ well not tagged

Number of connections: Will be one of eight wells serving 3 approved Group A system Population served:

Township: 40N Range: 1E

Section: 4 1/4 1/4 Section: NE/SE

Latitude/longitude (if available): N48°58min58sec / W122° 41min 12sec

How was lat./long. determined?

___ global positioning device ___ survey _X_ map

___ other:

* Refer to Assistance Packet for details and explanations of all questions in Parts II through V.

PART II: Well Construction Information

1) Date well originally constructed: 04 / 24 / 07 month/day/year

last reconstruction: ___ / ___ / ___ month/day/year

___ information unavailable

2) Well driller: Boart Longyear

___ well driller unknown

3) Type of well:

___ Drilled: ___ rotary ___ bored X cable (percussion)

___ Dug

___ Other: ___ spring(s) ___ lateral collector (Ranney)

___ driven ___ jetted ___ other:_____

Additional comments:_____

4) Well report available? X yes (attach copy to form) ___ no

If no well log is available, please attach any other records documenting well construction; e.g.. boring logs, "as built" sheets, engineering reports, well reconstruction logs.

5) Average pumping rate: 500 (gallons/min)

Source of information: Civil Engineer Estimates

If not documented, how was pumping rate determined? Temporary pumping rate is 500 gpm for 3 months. New assessment form will be completed for permanent system.

___ Pumping rate unknown

PART III: Hydrogeologic Information

1) Depth to top of open interval: [check one]

___ < 20 ft ___ 20-50 ft ___ 50-100 ft X > 100 ft

___ 100-200 ft (mostly coarse sand/gravel in unsaturated zone above the aquifer being tapped)

___ information unavailable

2) Depth to ground water (static water level):

___ < 20 ft ___ 20-50 ft X 50-100 ft ___ >100 ft

___ flowing well/spring (artesian)

How was water level determined?

___well log X other: Electric tape

___ depth to ground water unknown

3) Wellhead elevation (height above mean sea level): 133 (ft)

How was elevation determined? X topographic map

___ altimeter ___ other:_____

___ information unavailable

4) Confining layers: (This can be completed only for those sources with a drilling log, well log or geologic report describing subsurface conditions.)

X evidence of a confining layer in well log

___ no evidence of a confining layer in well log

If there is evidence of a confining layer, is the depth to ground water more than 20 feet above the top of the open interval?

X yes ___ no

___ information unavailable

5) Sanitary setback:

___ < 100 ft* X 100-120 ft ___ 120-200 ft

___ > 200 ft

* if less than 100 ft describe the site conditions:

_____

_____

6) Wellhead construction:

___ wellhead enclosed in a wellhouse

X controlled access (describe): Well is located within City's watershed. Wellhead will be sealed.

___ other uses for wellhouse (describe):_____

_____

___ no wellhead control

7) Surface seal:

___ < 18 ft (no Department of Ecology approval)

___ < 18 ft (Ecology approved)

X > 18 ft ___ depth of seal unknown

___ no surface seal

8) Annual rainfall:

___ < 10 in/yr ___ 10-25 in/yr X > 25 in/yr

PART IV: Mapping Your Ground Water Resource

1) Annual volume of water pumped: 44.8 million gallons) 500 gpm continuous for 3 months.

How was this determined?

___ meter

X estimated: ___ pumping rate ___ pump capacity

___ other: _____

2) "Calculated Fixed Radius" estimate of ground water movement:
(see Instruction Packet)

1 year ground water travel time: 371 (ft)

5 year ground water travel time: 830 (ft)

10 year ground water travel time: 1174 (ft)

Information available on length of screened/open interval?

X Yes ___ No

Length of screened/open interval: 80 (ft)

Comments: Well PW-5.1 and CFR protection areas are located within the City's designated well head Protection area for the City's Wellfield. (see attached figure)

PART V: Assessment of Water Quality

1) Regional sources of risk to ground water:

Please indicate if any of the following are present within a circular area around your water source having a radius equivalent to the five year ground water travel time:

	yes	no	unknown
likely pesticide application		X	
stormwater injection wells		X	
other injection wells		X	
abandoned ground water wells	X		
landfills, dumps, disposal areas		X	
known hazardous materials clean-up site		X	
water system(s) with known quality problems		X	
population density > 1 house/acre		X	
residences commonly have septic tanks	X		

If other recorded or potential sources of ground water contamination exist within the ten year time of travel circular zone around your water supply, please describe:

2) Source specific water quality records:

Please indicate any violations since 1986.

A. Nitrate:	yes	no
MCL violation(s) for nitrate/nitrite		X
< 2 mg/liter nitrate		
2-5 mg/liter nitrate		
> 5 mg/liter nitrate		
Nitrate sampling records unavailable		

	Yes	No
B. VOCs:		
MCL or SAL violation(s) for VOCs	___	___
VOCs detected at least once	___	___
VOCs never detected	X	___
___ VOC sampling records unavailable		
C. EDB/DBCP:		
EDB/DBCP detected below MCL at least once	___	___
EDB/DBCP detected above MCL at least once	___	___
EDB/DBCP never detected	___	___
___ EDB/DBCP tests required but not yet completed		
X EDB/DBCP tests not required (assumed not required)		
D. Other SOCs:		
Other SOCs detected	___	___
X Other SOC tests not performed		
E. Bacterial contamination:		
Any bacterial detection(s) in the past 3 years	___	___
X Source sampling records for bacteria unavailable		

If any SOCs in addition to EDB/DBCP were detected, please identify and date: _____

Part VI: Geographic or Hydrologic Factors Contributing to a Non-Circular Zone of Contribution

The following questions will help identify those ground water systems which may not be accurately represented by the calculated fixed radius (CFR) method described in Part IV. For these sources, the CFR areas should be used as a preliminary delineation of the critical time of travel zones for that source. As a system develops its Wellhead Protection Plan for theses sources, a more detailed delineation method should be considered.

1) Is there evidence of obvious hydrologic boundaries within the 10 year time of travel zone of the CFR? (Does the largest circle extend over a stream, river, lake, up a steep hillside, and/or over a mountain or ridge?)

_X_ Yes _____ No

Describe with references to map produced in Part IV:

Deep confined aquifer. Boundaries of aquifer not consistent with topography.

2) Does the drilling log, well log or other geologic/engineering reports identify that the well is located in an area where the underground conditions are identified as fractured rock and/or basalt terrain?

_____ Yes __X__ No

3) Is the source located in an aquifer with a high horizontal flow rate? (These can include sources located on flood plains of large rivers, artesian wells with high water pressure, and/or shallow flowing wells and springs.)

_____ Yes __X__ No

4) Are there other high capacity wells (agricultural, municipal and/or industrial) located within the CFRs?

a) Presence of ground water extraction wells removing more than approximately 500 gal/min within...

	yes	no	unknown
< 1 year travel time.....	__	X	__
1-5 year travel time.....	X	__	__
5-10 year travel time.....	X	__	__

b) Presence of ground water recharge wells (dry wells) or heavy irrigation within...

	yes	no	unknown
< 1 year travel time.....	___	X	___
1-5 year travel time.....	___	X	___
5-10 year travel time.....	___	X	___

a) 1 year time of travel zone: ____ Yes ____ No
b) 5 year time of travel zone: ____ Yes ____ No
c) 10 year time of travel zone: ____ Yes ____ No

Please identify or describe additional hydrologic or geographic conditions that you believe may affect the shape of the zone of contribution for this source. Where possible, reference them to locations on the map produced in Part IV.

Suggestions and Comments

This form and the Instruction Packet are still in the process of development. Your comments and suggestions for improving this survey tool will be greatly appreciated. Did you have difficulty obtaining the necessary information? Were any of the questions or instructions difficult to understand? Did we do an adequate job of explaining the purpose of this mailing? Do you feel the survey was valuable as a learning experience? Any other comments or criticisms you might have would be appreciated.

Project Exhibit

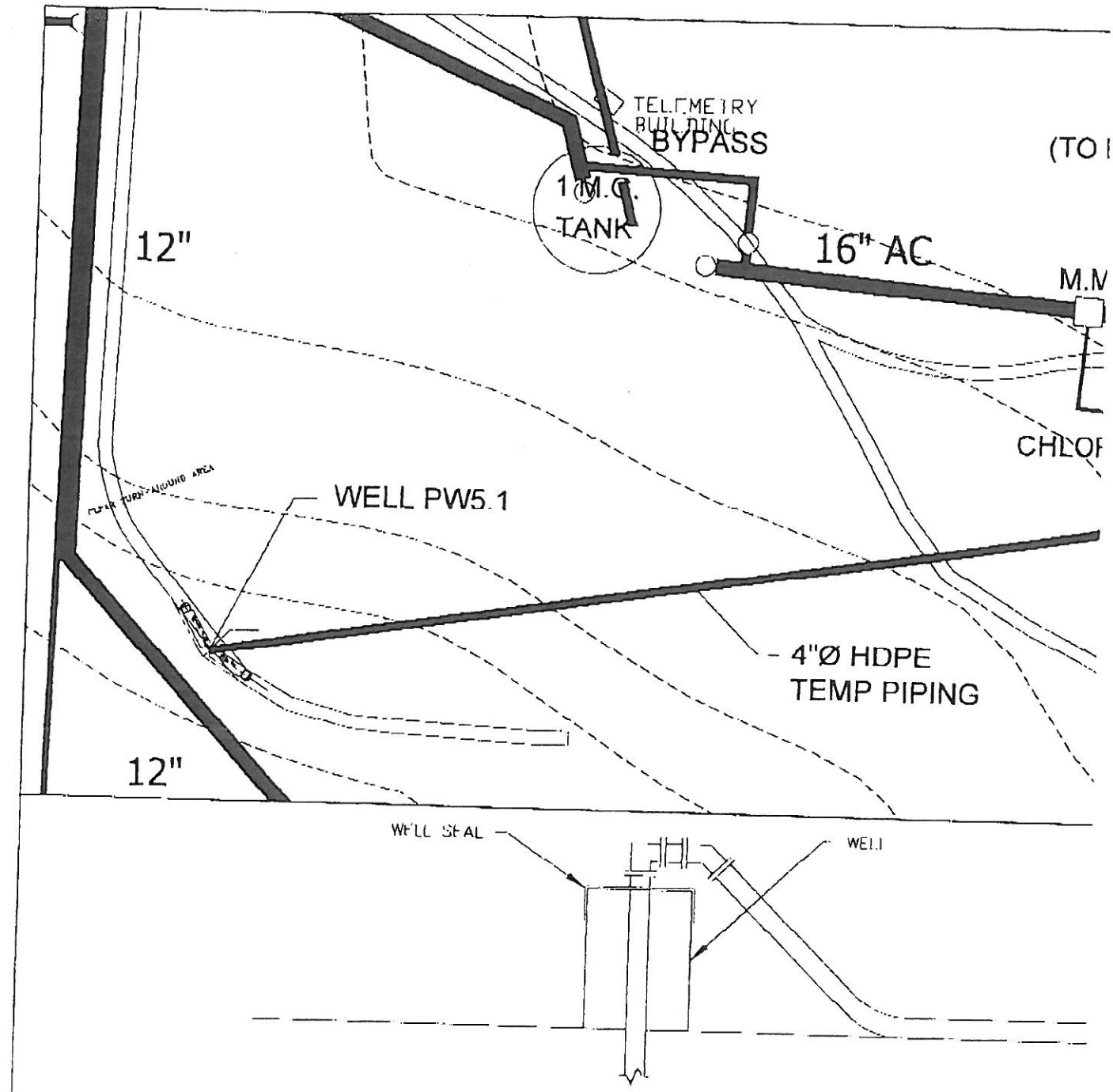

DESIGNED BY	DLB
DRAWN BY	IDH
CHECKED BY	

R&E

REICHHARDT & EBE
ENGINEERING, INC.
CONSULTING ENGINEERS
423 Front St., Suite 201 PO Box 978
Lynden, Washington 98264
Phone 360-354-3687
Fax 360-354-0407

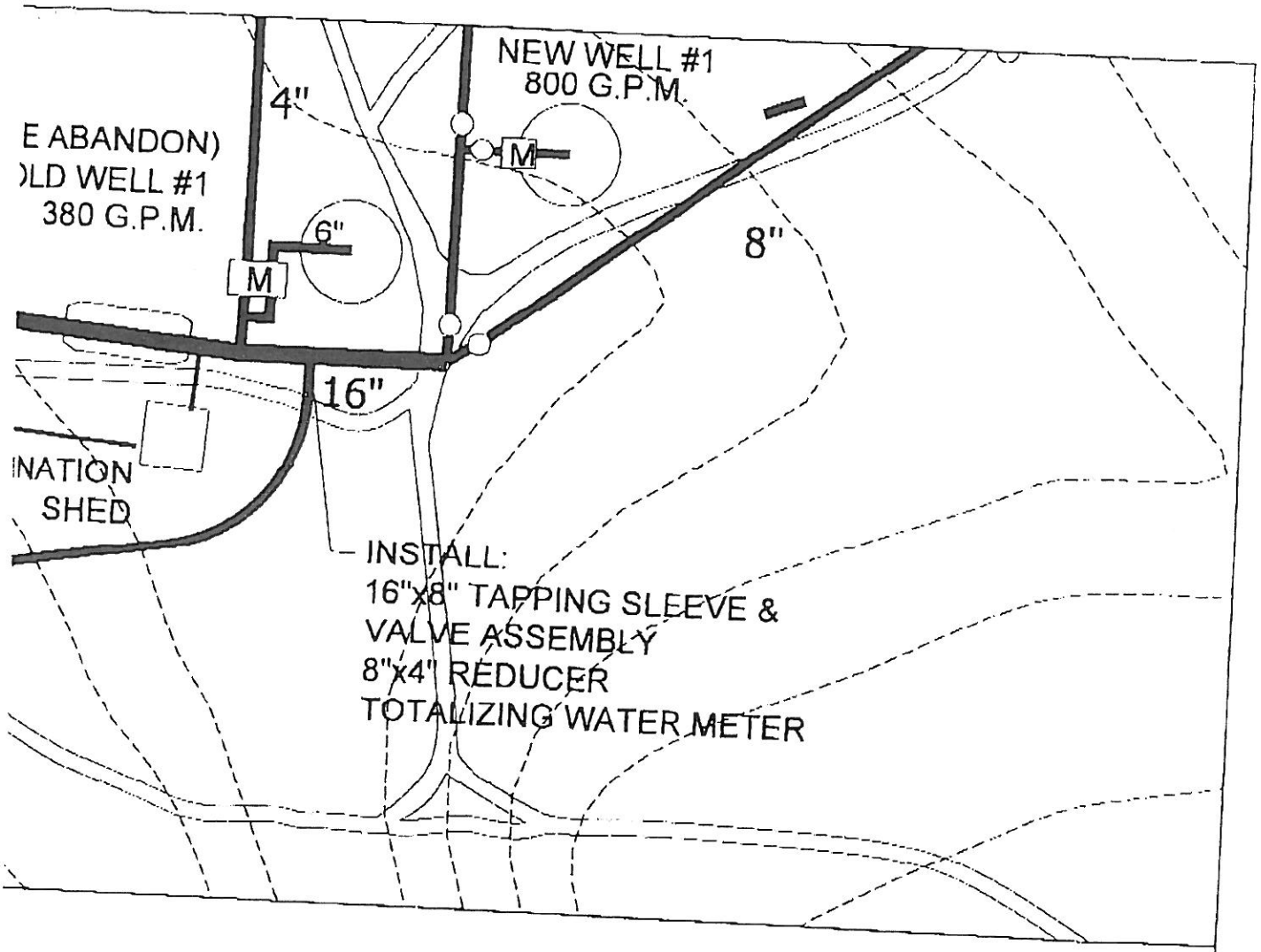

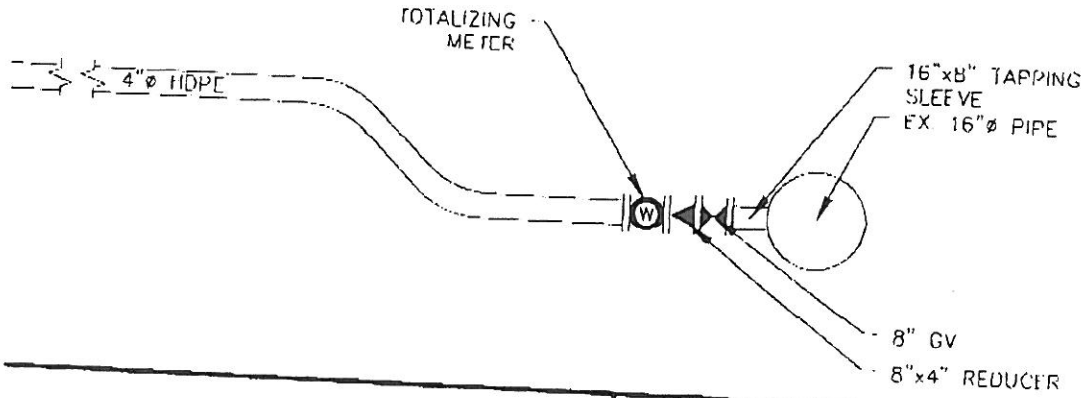

PW5.1 TEMPORARY COMMISSIONING	JOB# / DWG 04039	DATE 6/19/07
	SCALE H: n/a V: n/a	SHEET 1 of 1

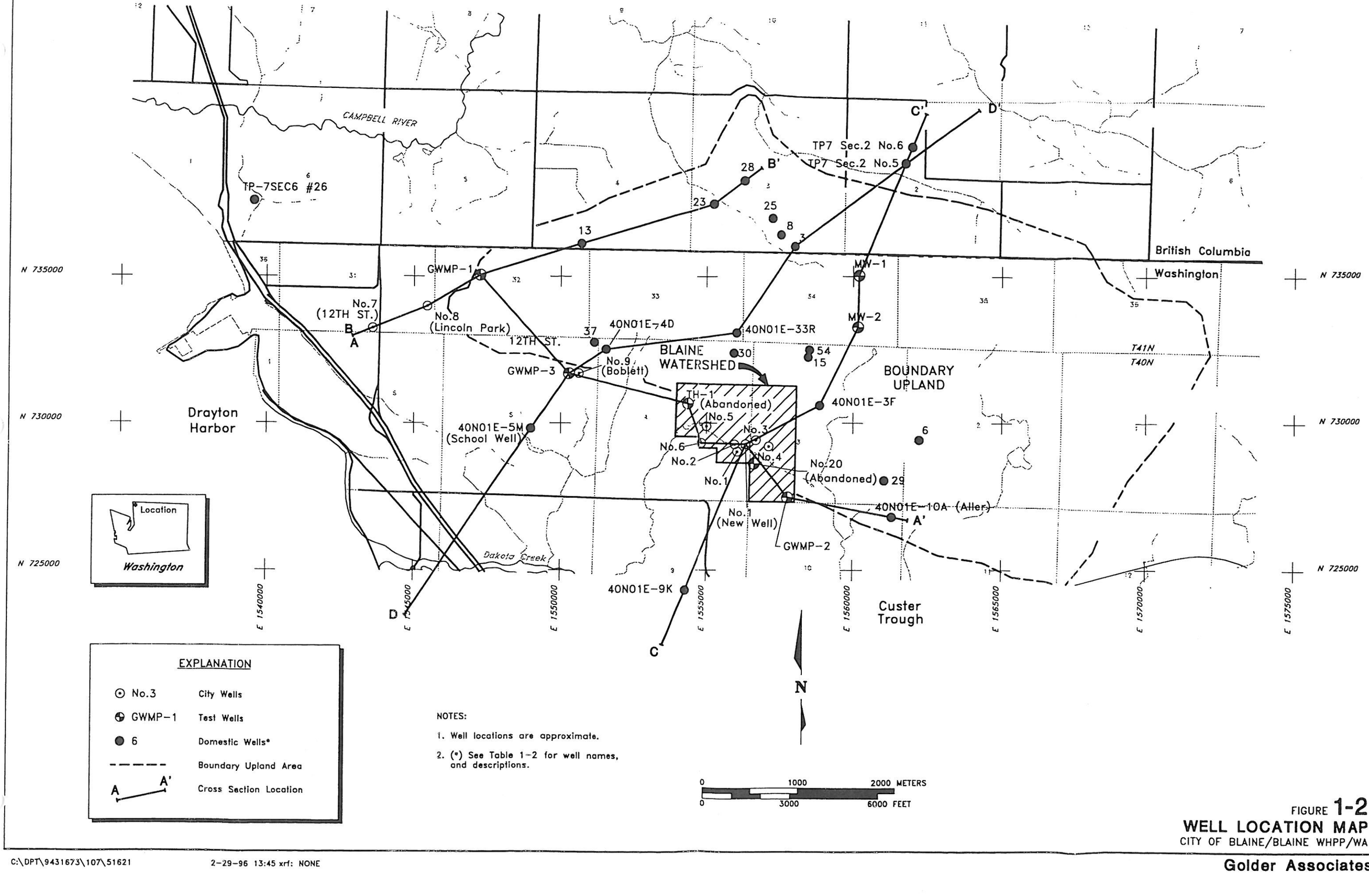

EXPLANATION

⊙ No.3	City Wells
⊕ GWMP-1	Test Wells
● 6	Domestic Wells*
- - - - -	Boundary Upland Area
A A'	Cross Section Location

NOTES:

1. Well locations are approximate.
2. (*) See Table 1-2 for well names, and descriptions.

FIGURE **1-2**

WELL LOCATION MAP

CITY OF BLAINE/BLAINE WHPP/WA

C:\DPT\9431673\107\51621 2-29-96 13:45 xrf: NONE

Golder Associates

A
NORTHWEST

A'
NORTHWEST

Blaine Watershed

No. 7 (12th Street Well)
No. 8 (Lincoln Park)
GWMP-1
GWMP-3
TH-1 (abandoned)
No. 6
New No. 1
No. 20 (abandoned)
GWMP-2
40N01E-10A

500
400
300
200
100
0
-100
-200
-300
-400
-500
-600

(10/10/91)
(6/6/95)
(6/5/95)
(11/2/95)
(8/78)

A/B
C
D
E
F

Shallow Aquifer System

Deep Aquifer System

?

0 3000
FEET

LEGEND

- Clay and Silt
- Silty Sand to Fine Sand
- Sand, Sand and Gravel
- (10/10/91) Water Level and Date of Measure
- Screened or Open Interval
- A/B Hydrostratigraphy (see description in Table 3-1)

FIGURE **3-1**
CROSS SECTION A-A'
BLAINE/WHPP/WA

PROJECT NO. 943 1673 107 DRAWING NO. 65074 DATE 2/29/96 DRAWN BY CB

Golder Associates

B
SOUTHWEST

B'
NORTHEAST

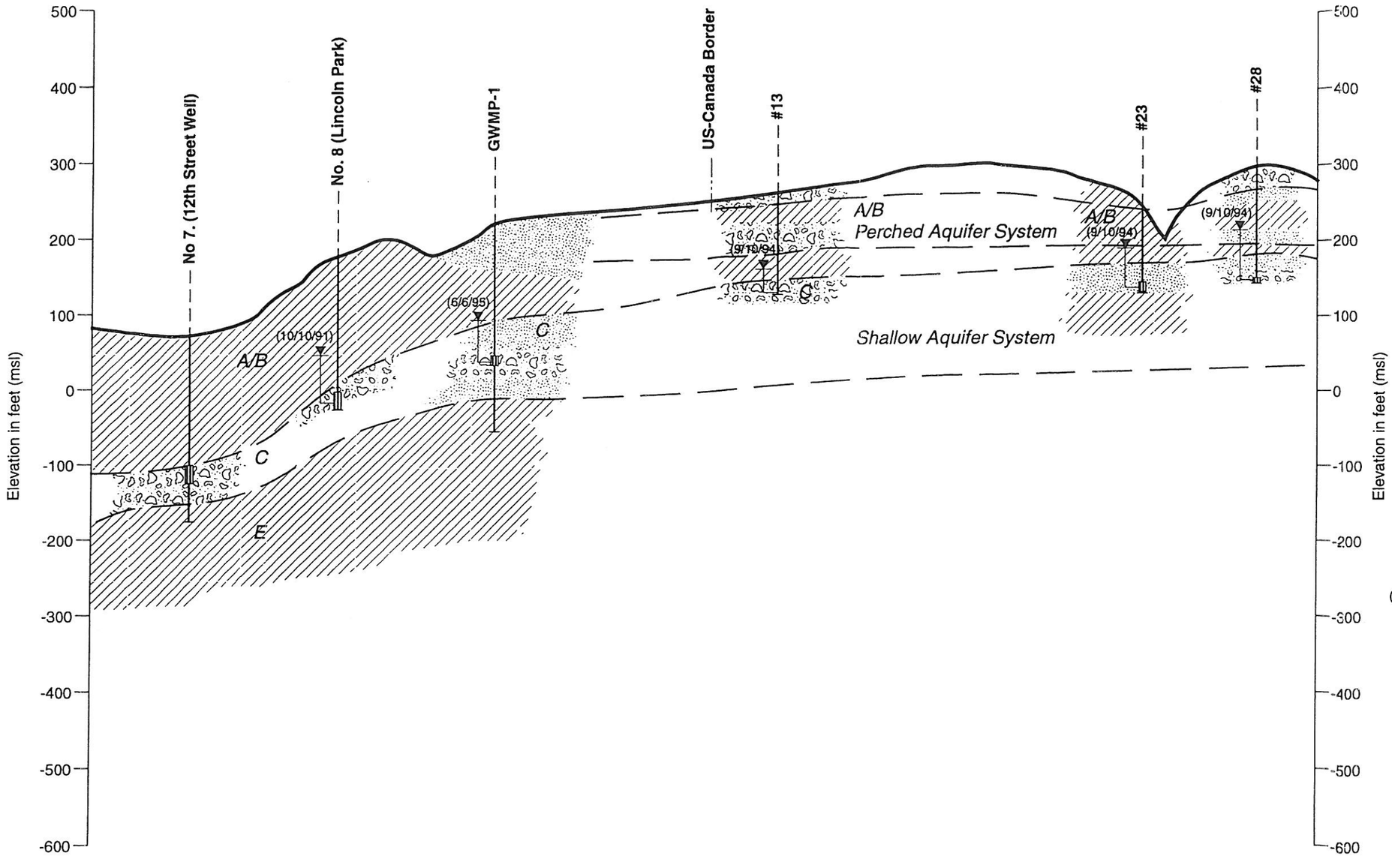

LEGEND

- Clay and Silt
- Silty Sand to Fine Sand
- Sand, Sand and Gravel
- (10/10/91) Water Level and Date of Measure
- Screened or Open Interval
- *A/B* Hydrostratigraphy (see description in Table 3-1)
- **#13** Domestic Well ID Number , see Table 1-2

0 3000
FEET

FIGURE **3-2**
CROSS SECTION B-B'
BLAINE/WHPP/WA

PROJECT NO. 943 1673.107 DRAWING NO. 65075 DATE 2/22/96 DRAWN BY CB

Golder Associates

C
SOUTHWEST

C'
NORTHEAST

Elevation in feet (msl)

500
400
300
200
100
0
-100
-200
-300
-400
-500
-600

40N01E-9K
New No. 1
No. 3
40N01E-3F
MW-2
MW-1
TP-7 Sec.2 No.6
Tp-7 Sec. 2 No. 5

Dakata Creek

A/B
or
E

A/B
(11/2/95)
D
E
F

A/B
or
C

Perched
Aquifer
System

C

Shallow
Aquifer
System

(9/29)
(10/94)
(3/72)

A/B
C
E

?
?

Deep
Aquifer
System

0 3000
FEET

LEGEND

- Clay and Silt
- Silty Sand to Fine Sand
- Sand, Sand and Gravel
- (10/10/91) Water Level and Date of Measure
- Screened or Open Interval
- A/B Hydrostratigraphy (see description in Table 3-1)

FIGURE **3-3**
CROSS SECTION C-C'
BLAINE/WHPP/WA

PROJECT NO. 943 1673.107 DRAWING NO. 65076 DATE 2/23/96 DRAWN BY CB

Golder Associates

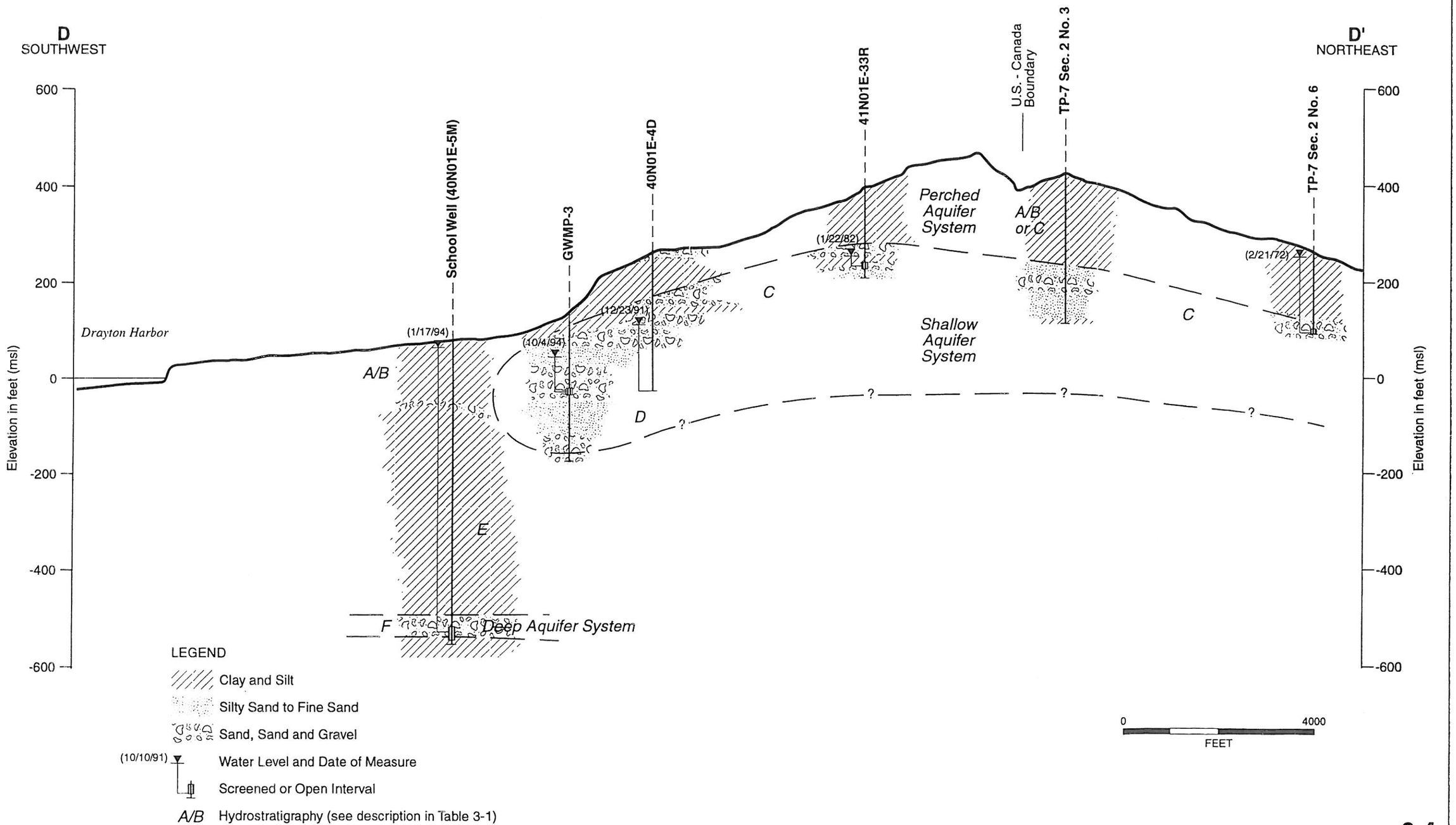

FIGURE **3-4**
CROSS SECTION D-D'
BLAINE/WHPP/WA

PROJECT NO. 943 1673.107 DRAWING NO. 65086 DATE 2/22/96 DRAWN BY CB

Golder Associates

January 20, 2010
Project No. EH080152A

City of Blaine Public Works Department
1200 Yew Avenue
Blaine, Washington 98230

Attention: Mr. Steve Banham – Public Works Director

Subject: DRAFT - Ground Water Monitoring Plan
City of Blaine Water System
Blaine, Washington

INTRODUCTION AND PROJECT BACKGROUND

This report presents the results of our hydrogeologic services regarding the development of a ground water monitoring plan for the City of Blaine's (City's) and the Birch Bay Water & Sewer District's (District's) production wells located in the northwestern portion of Whatcom County, Washington. The services described in this report were jointly authorized by the City and the District and completed under our General Services Contract with the District, which was authorized on March 3, 2005.

The City currently provides municipal water to a total population base of approximately 13,270, with 5,550 located within the City's service area, approximately 7,350 in the District service area, and roughly 420 in the Bell-Bay Jackson Water Association (Bell-Bay) service area (CHS, 2008). Twelve production wells (PW-1R, PW-2, PW-3R, PW-4, PW-4.1, PW-5, PW-5.1, PW-6, PW-7, PW-8, PW-8.1, and PW-9), located within the City limits or the City's watershed, currently are the City's sole source of potable water. The District is also in the process of acquiring water rights for PW-2D, which is located within the District's service area. We understand that PW-2D will be incorporated into the City/District's water supply system if water rights are successfully acquired for the well.

The City's and District's production wells are completed within two distinct aquifer units that are separated by over a hundred feet of low-permeability sediments (Associated Earth Sciences, Inc. [AESI], 2008). Production wells PW-4, PW-4.1, PW-5, PW-6, PW-7, PW-8, PW-8.1, and PW-9 are completed in what is referred to as the Intermediate Aquifer. Production wells PW-1R, PW-2, PW-3R, PW-5.1, and PW-2D are completed in a lower water-bearing unit that is referred to as the Deep Aquifer. The City, in accordance with Washington State Department of Health (Health) standards and regulations, monitors water quality on a routine bases in their

DRAFT

production wells. The water quality data is recorded in a database developed and controlled by the City. For the purposes of this ground water monitoring plan, it is assumed that the City/District will continue to monitor water quality in their production wells in accordance with applicable Health requirements.

The approximate locations of the City/District's production wells and other nearby wells are shown on the "Well Location Map," Figure 1. AESI previously developed a comprehensive summary of the City's and District's ground water based water system. The results of our previous services, including detailed discussions of the geologic/hydrogeologic setting of the project area and water quality in the Intermediate and Deep Aquifers, were provided to the City and District in our report "Geologic, Hydrogeologic, and Ground Water Right Evaluation, Technical Report, City of Blaine Ground Water Management Area," dated October 28, 2008. The background geologic, hydrogeologic, and water quality data presented in this report is summarized from our October 28, 2008 report.

PURPOSE AND SCOPE

The purpose of this project was to assist the City/District in developing a ground water monitoring plan for their water supply system. The services provided by AESI consisted of the following:

1. Compile pertinent information for the City's current monitoring wells. The information included: (1) location, (2) construction, (3) existing water level data, and (4) existing water quality data.

2. Interview selected City employees regarding the locations of the City's monitoring wells.

3. Field-verify the location and condition of each proposed monitoring well. The location of each well was recorded in the field using a GPS receiver. The approximate elevation of the wells were determined using a GPS receiver and topographic maps.

4. Develop recommendations for additional monitoring wells, if needed.

5. Prepare an appropriately scaled map of the region that shows the existing and proposed monitoring well locations relative to the City/District's production wells.

6. Prepare a ground water monitoring plan for the wells that addresses frequency of water level monitoring and water quality testing for existing and proposed monitoring wells.

EXISTING MONITORING WELLS

In the early to mid 1990s, the City installed five ground water monitoring wells (GWMP-1, GWMP-2, GWMP-3, MW-1, and MW-2) in the vicinity of the City's watershed, at the

DRAFT

approximate locations shown on Figure 1. Monitoring wells MW-1 and MW-2 were located on private property roughly 3,000 feet northeast of the watershed. We were unable to field-locate MW-1 and MW-2 and, for the purposes of this report, it was assumed that they are inaccessible. Monitoring wells GWMP-1, GWMP-2, and GWMP-3 are located on City-controlled property and are currently accessible. All three of these monitoring wells are completed within the Intermediate Aquifer. Details regarding the construction of the monitoring wells and the City/District's production wells are included in Attachment 1, Tables A-1 and A-2.

The three existing ground water monitoring wells (GWMP-1, GWMP-2, and GWMP-3) were drilled and installed in August and September 1990 by Hayes Drilling Inc., of Bow, Washington. A summary of the pertinent construction details for the three wells is presented in Table 1. Detailed logs of each well are included in Attachment 2.

The three existing ground water monitoring wells are completed within the Intermediate Aquifer. GWMP-2 and GWMP-3 are located hydraulically downgradient of the City's watershed and GWMP-1 is located hydraulically upgradient of PW-7, PW-8, and PW-8.1 (Figure 1). Our review of the available information indicates that down-hole submersible sampling pumps may have been originally installed in the wells. However, the available information also indicates that water samples have not been obtained from these wells since June 1995. Control boxes and some associated wiring were observed at each wellhead during our site visits in June 2008, but it is unclear if submersible pumps are currently installed in the wells or if the pumps are operational.

Table 1
Summary of Monitoring Wells Construction Details

Monitoring Well	Elevation (feet)	Casing Diameter (inches)	Completion Depth (feet)	Static Water Level[1] (feet)
GWMP-1	230	8.0	176.2 - 186.5	140.0
GWMP-2	175	8.0	83.5 - 88.5	70.3
GWMP-3	175	8.0	148.0 - 161.3	85.0

Notes:
[1] Depth to static water level as reported by well drillers.

GROUND WATER QUALITY

The available information indicates that ground water quality samples were obtained from the existing monitoring wells in October 1990 and June 1995. Water quality data for GWMP-1, GWMP-2, GWMP-3, and other wells completed within the Intermediate Aquifer system are displayed on the Piper diagram shown on Figure 2.

DRAFT

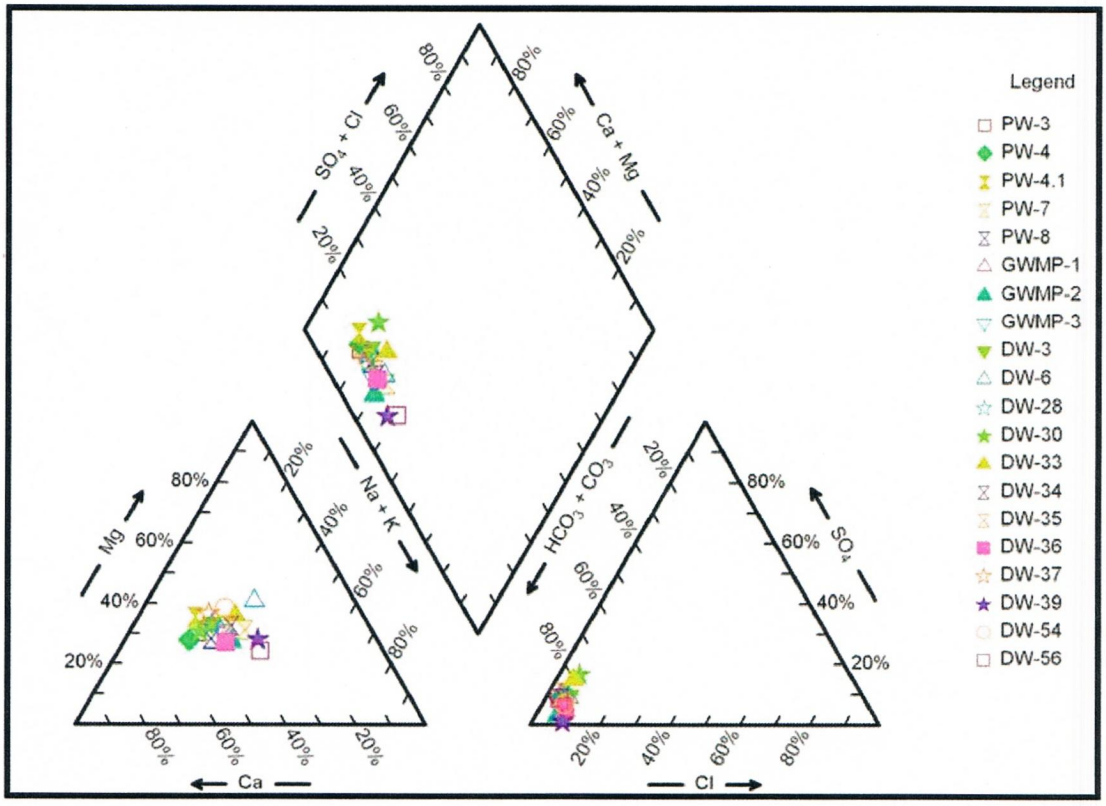

Figure 2. Water Quality Diagram – Intermediate Aquifer

The Piper trilinear diagram allows the water chemistry (cation and anion composition) of many water samples to be plotted on a single graph where major groupings or trends in the data can be observed. Ground water in the Intermediate Aquifer appears to be a bicarbonate type with a slight trend toward calcium as a dominant cation (Figure 2).

Water quality data for wells completed within the Deep Aquifer system are displayed on the Piper diagram shown on Figure 3. Water quality in the Deep Aquifer is generally a sodium bicarbonate type, which is significantly different than the water quality observed in the Intermediate Aquifers (Figures 2 and 3). The significant difference in water quality between the Intermediate and Deep Aquifer systems suggests a relatively high degree of hydraulic separation between the aquifers and a significantly different recharge source area.

DRAFT

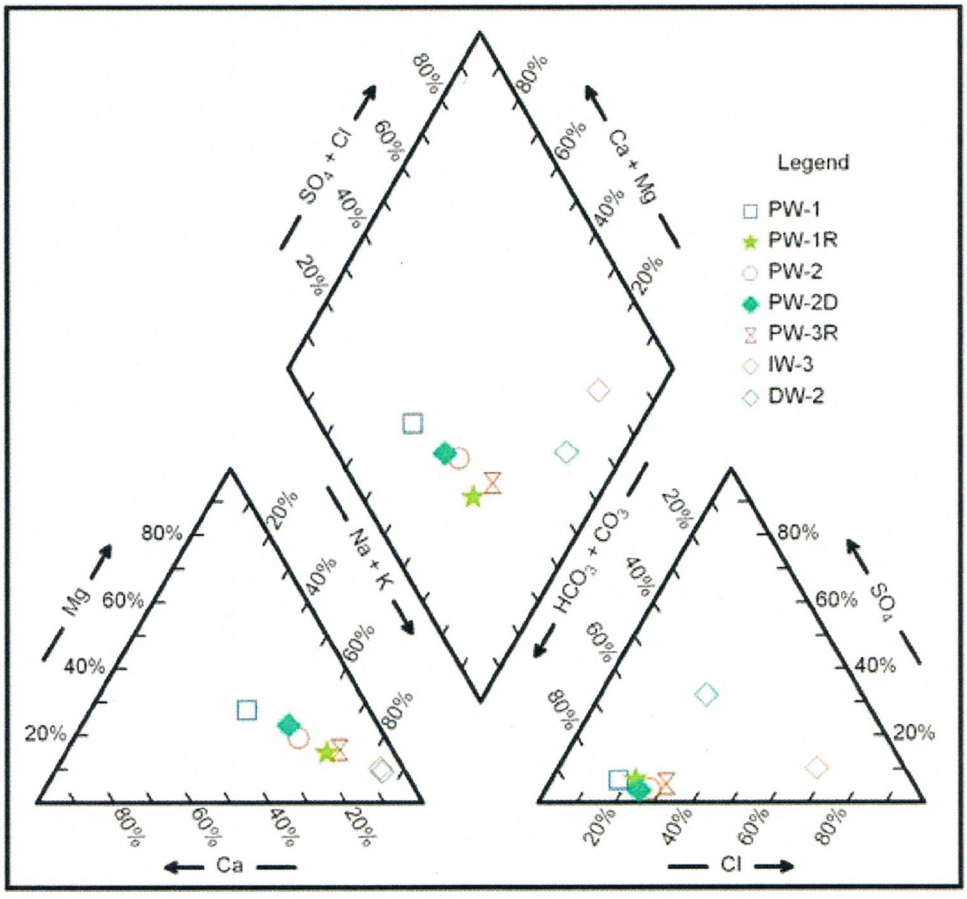

Figure 3. Water Quality Diagram – Deep Aquifer

DISCUSSION

GENERAL

The purpose of this ground water monitoring plan is to develop temporally consistent ground water quality and quantity data for the Intermediate and Deep Aquifer at specific locations that are hydraulically upgradient of the City/District's production wells. This will allow the City/District to identify potential long-term water quality/quantity trends in the aquifers prior to the trends potentially affecting water quality in their production wells. This ground water monitoring plan focuses on identifying a program to collect pertinent water quality/quantity data from two existing (GWMP-1 and GWMP-2) and three proposed ground water monitoring wells (GWMP-4, GWMP-5, and GWMP-6). The water quality/quantity data obtained from the monitoring wells will be analyzed and compared with similar ground water data that are routinely obtained from the City/District's active production wells in accordance with the monitoring requirements outlined in Chapter 246-290 WAC. A summary of the ground water monitoring plan is presented in Table 2.

DRAFT

Table 2
Ground Water Monitoring Plan
City of Blaine/Birch Bay Water & Sewer District

Well	Water Level	Chloride (mg/L)	Sulfate (mg/L)	Sodium (mg/L)	Alkalinity (mg $CaCO_3$)	Magnesium (mg/L)	Calcium (mg/L)	Bicarbonate (mg $CaCO_3$)	Carbonate (mg $CaCO_3$)	Potassium (mg/L)	Arsenic (mg/L)
Active Production Wells	Q	C	C	C	C	C	C	C	C	C	C
GWMP-1	Q	A	A	A	A	A	A	A	A	A	A
GWMP-2	Q	A	A	A	A	A	A	A	A	A	A
GWMP-4[(1)]	Q	A	A	A	A	A	A	A	A	A	A
GWMP-5[(1)]	Q	A	A	A	A	A	A	A	A	A	A
GWMP-6[(1)]	Q	A	A	A	A	A	A	A	A	A	A

Notes:
[(1)] Proposed monitoring wells.
A = Annual.
Q = Quarterly.
C = Samples will be obtained in accordance with the currently established schedule for primary and secondary inorganic chemicals. It should be noted that alkalinity, magnesium, calcium, bicarbonate, carbonate, and potassium are not included in the primary or secondary inorganic chemicals required for monitoring by the Washington State Department of Health.
mg/L = milligrams per liter.
mg $CaCO_3$ = milligrams calcium carbonate.

DRAFT

Trends in the water quality data will be evaluated annually by the following methods:

- The water quality data for each monitoring and production well will be plotted on individual Piper trilinear diagrams. This will allow an evaluation of water chemistry trends in each well over time.

- Cumulative water quality data for the wells completed within the Deep and Intermediate Aquifers will be plotted on separate Piper trilinear diagrams. This will allow an evaluation of water chemistry trends in the Deep and Intermediate Aquifers relative to time.

- Chloride and arsenic concentrations in each well will be plotted on individual time series graphs to allow an evaluation of concentration versus time.

GROUND WATER MONITORING POINTS

As discussed in detail in AESI's October 2008 report, ground water in the Intermediate Aquifer flows radially off the Boundary Upland and generally flows to the southwest beneath the City's watershed. In the immediate vicinity of PW-7, PW-8, and PW-8.1, ground water in the Intermediate Aquifer appears to flow generally to the west. Based on limited data, ground water in the Deep Aquifer appears to flow toward the southwest beneath the City's watershed.

Based on its location, GWMP-1 appears to be adequately positioned to monitor water quality in the Intermediate Aquifer hydraulically upgradient from production wells PW-7, PW-8, and PW-8.1 (Figure 1). Monitoring point GWMP-2 is located hydraulically downgradient from the City's production wells located within the watershed (Figure 1). Deep production wells PW-1R, PW-2, PW-3R, and PW-5.1 are located hydraulically upgradient from the District's well (PW-2D). However, the City/District currently has no monitoring points established in the Deep or Intermediate Aquifers hydraulically upgradient of the City's watershed.

We understand that the City/District is considering installing ground water monitoring wells within both the Intermediate and Deep Aquifers at locations that are hydraulically upgradient of the City's watershed. These proposed monitoring points would be used to monitor ground water quality in the aquifers that are the City/District's water source. For the purpose of this ground water monitoring plan, it has been assumed that the City/District will install a minimum of three ground water monitoring wells (GWMP-4, GWMP-5, and GWMP-6) at the approximate locations shown on Figure 1. Ground water monitoring well GWMP-4 will be installed in the Intermediate Aquifer. GWMP-5 and GWMP-6 will be completed within the Deep Aquifer. In summary, GWMP-1 and GWMP-4 will be the hydraulically upgradient monitoring points for the Intermediate Aquifer and GWMP-5 and GWMP-6 will be the upgradient monitoring points for the Deep Aquifer. Detailed recommendations for the design of the ground water monitoring wells are beyond the scope of services developed for this task, but can be provided, if requested.

DRAFT

RECOMMENDATIONS

We have the follow recommendations regarding the implementation of the ground water monitoring plan presented in this report.

- Remove and evaluate existing pumps (if present) that are installed in GWMP-1 and GWMP-2. Install new dedicated pumps in both wells (if needed) and wire pump so that they can be operated using a portable generator during water sampling events.

- Install 1.5-inch-diameter PVC water level sounding tubes in GWMP-1 and GWMP-2.

- Ground water levels should be monitored using an electric water level indictor. As an alternative, ground water levels could also be monitored using pressure transducer/data logger systems.

- Install dedicated pumps and 1.5-inch-diameter PVC water level sounding tubes in GWMP-4, GWMP-5, and GWMP-6 following well construction. The pumps should be installed so they can be operated using a portable generator during water sampling events.

- The casing rim elevations of the existing and new monitoring wells should be determined by surveying to NAV 88 datum.

- Water samples should be obtained from each monitoring well after at least five well volumes of water have been removed from each casing.

- Water samples should be stored in containers provided by the analytical laboratory. The water sample containers should be properly labeled, packaged to prevent breakage, and transported to the laboratory in sealed coolers. Blue Ice™ in sealed bags should be used in each cooler to maintain the sample temperature at approximately 4 degrees Celsius.

- Chain-of-custody forms should be completed for each sampling event. The chain-of-custody forms should be placed within a watertight sealable plastic bag and placed within the coolers for transport to the laboratory.

LIMITATIONS

We prepared this report for use by the City of Blaine and the Birch Bay Water & Sewer District regarding the development of a ground water monitoring plan for the City/District's water system. The information presented in this report is based on the above-described research and field activities.

DRAFT

Within the limitations of scope, schedule, and budget, AESI attempted to execute these services in accordance with generally accepted professional principles in the field of hydrogeology at the time this report was prepared. No warranty, express or implied, is made.

We have enjoyed working with you and are confident that these recommendations will aid in the successful completion of your project. If you should have any questions, or require further assistance, please do not hesitate to call.

Sincerely,
ASSOCIATED EARTH SCIENCES, INC.
Everett, Washington

Charles S. Lindsay, L.G., L.E.G., L.Hg.
Principal Geologist/Hydrogeologist

Attachments:	Figure 1:	Well Location Map
	Figure 2:	Water Quality Diagram – Intermediate Aquifer
	Figure 3:	Water Quality Diagram – Deep Aquifer
	Attachment 1:	Well Construction Information
	Attachment 2:	Well Logs

CSL/ld
EH080152A6
Projects\20080152\EH\WP

DRAFT

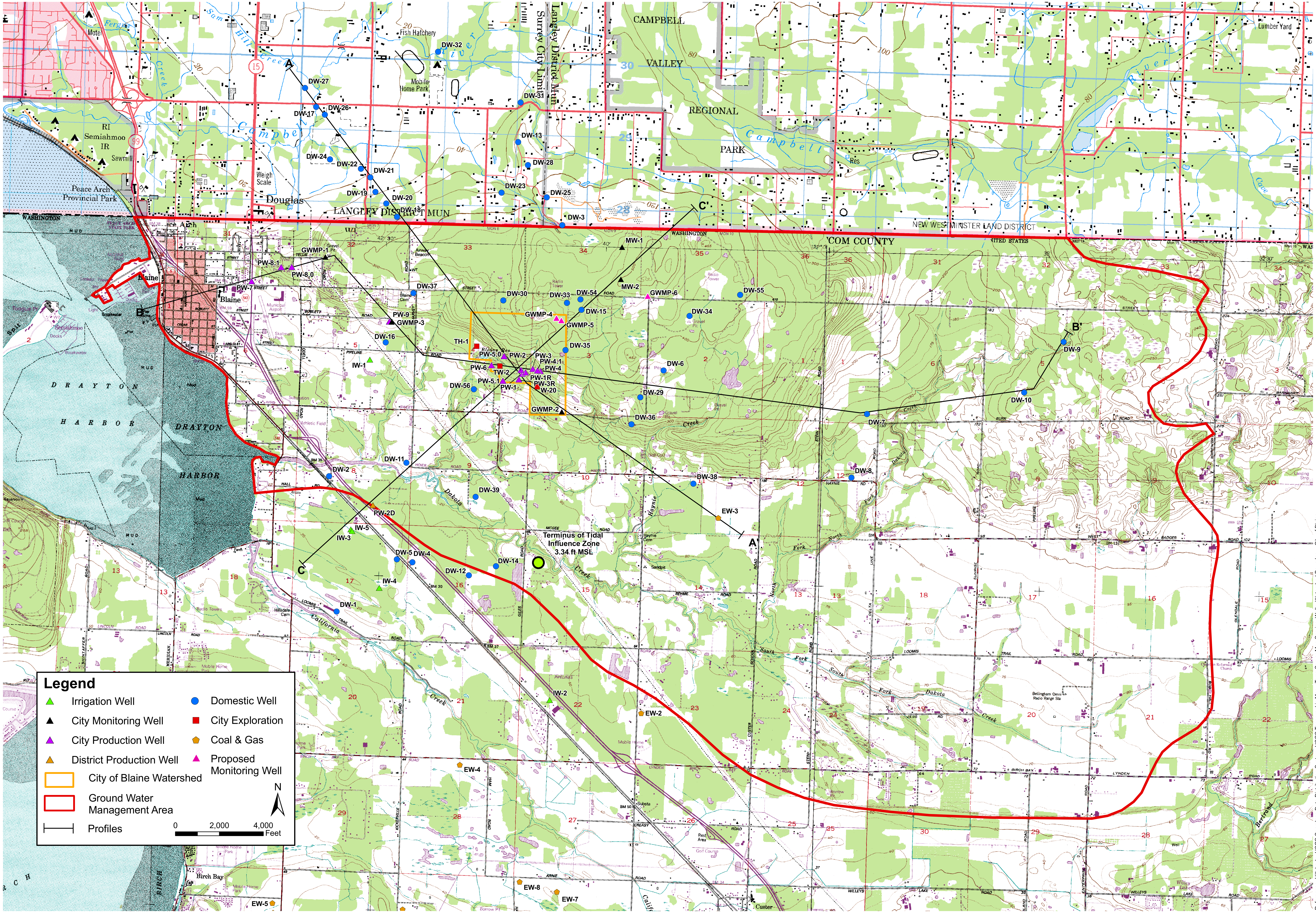

References: Hillshade- USGS Seamless Data Distribution System; USGS Topographic Map - Terra Server Map Service; Wells, Watershed Boundary - City of Blaine

Associated Earth Sciences, Inc.

WELL LOCATION MAP
CITY OF BLAINE / BIRCH BAY WATER AND SEWER DISTRICT
WHATCOM COUNTY, WASHINGTON

FIGURE 1
DATE 6/09
PROJ. NO. EH080152A

ATTACHMENT 1

Well Construction Information

Table A-1
SUMMARY OF CITY/DISTRICT PRODUCTION WELLS

Well Number	Other Designations	DOH Source No.	Ecology Tag	Location		Well Construction Information															Well Yeild/Aquifer Parameters						
									Casing Depth					Static Water Levels			Screen/Open Interval											
				Latitude	Longitude	Construction Date	Ground Surface Elevation	Well Depth	6-inc	8-in	10-in	12-in	16-in	Date	Depth	Elevation	Diameter (inches)	Depth to Top	Elevation Top	Depth to Bottom	Elevation Bottom	Discharge (gpm)	Drawdown (feet)	Specific Capacity (gmp/ft)	Aquifer Transmissivity (ft^2/d)	Aquifer Storativity	Aquifer Unit	Comments/References
PW-1		S01		48.98399	122.68378	1926	178.0	746.0	676-746	171-676	171-676	0-171		1/24/1992	107.0	71.0	8.0	172.0	6.0	746.0	-568.0						D	Golder 2/24/92 - Well Abandoned
PW-1R	PW-1A	S10	ABE837	48.98421	122.68342	10/1/1995	182.0	733.0		652-733	0-132	0-733		11/3/1995	116.0	66.0	8.0	706.0	-524.0	726.0	-544.0	536.0	127.0	4.2	3000 - 5600	$5X10^{-4}$ - $5X10^{-3}$	D	Golder 1/30/96
														3/25/1998											2050 - 2330	$4.9X10^{-4}$ - $5.6X10^{-4}$		Golder 4/21/98
														4/24/2007	127.9	54.1											
PW-2		S02	AGK383	48.98444	122.68410	4/11/1963	182.0	700.0	405.5-605.5	0-448	0-190			1/24/1992	109.0	73.0	6.0	605.5	-423.5	641.5	-459.5						D	Golder 2/24/92
														5/26/1992	105.0	77.0						200.0			720.0	$1X10^{-4}$ - $2.5X10^{-4}$		Golder 6/22/92
														3/25/1998											1810 - 2120	$5.3X10^{-4}$ - $7.9X10^{-4}$		Golder 4/21/98
														4/24/2007	127.7	54.3									2970-3800	0.0009		AESI 6/20/07
PW-3		S03		48.98471	122.68159	1961	198.0	75.0		0-75				1961	0.0	198.0	8.0	65.0	133.0	75.0	123.0	404.0	10.0	40.4			I	
PW-3R	PW-3A	S11	ABY237	48.98335	122.68373	3/1/1998	169.0	858.0	673-741			0-651	0-405	3/25/1998	120.0	49.0	6.0	673.0	-504.0	741.0	-572.0	402.0	175.0	2.3	1530 - 1850		D	Golder 4/21/98
														4/24/2007	131.6	37.4									1650-3770	0.0011		AESI 6/20/07
PW-4	PW-4.1	S04	AGK378	48.98415	122.67997		225.0	98.0	82-98	0-84				6/28/1965	24.5	200.5	6.0	82.0	143.0	98.0	127.0	600.0	54.0	11.1			I	
PW-4.1	PW-4.2	S13	AFT324	48.98434	122.68020	4/25/2005	210.0	108.0	86-99			0-86	0-85	4/18/2005	22.6	187.4	12.0	86.0	124.0	99.0	111.0	250.0	52.1	4.8			I	
PW-5	TW-3	S05	AGK384	48.98566	122.68684	8/4/1975	193.0	320.0	254-290	0-262				8/13/1975	78.0	115.0	6.0	262.0	-69.0	282.0	-89.0	545.0	73.2	7.4	1600.0	$5X10^{-4}$	I	S&W Nov. 1975
PW-5.1	PW-5R	S12		48.98278	122.68690	4/17/2007	145.0	820.0		715-805		0-720	0-387	4/24/2007	81.3	63.7	8.0	720.0	-575.0	800.0	-655.0	1260.0	348.4	3.6	2150-2700		D	AESI 6/20/07
PW-6	Well No. 19	S08	AGK377	48.98498	122.68829	11/7/1985	155.0	261.0		230-261		0-245		11/14/1985	75.0	80.0	8.0	245.0	-90.0	261.0	-106.0				1600 - 2400		I	S&W Nov. 1975
PW-7	12th Street	S07	ABB959			1929	65.0	247.0				0-177		8/23/2007	0.0	65.0	11.3	177.0	-112.0	200.0	-135.0						I	
PW-8	Lincoln Park	S06	AGK376	48.99649	122.72792	10/21/1969	185.0	200.0				0-174		8/23/2007	106.5	78.5	11.3	174.0	11.0	200.0	-15.0				3056-3361	$1.53X10^{-4}$	I	AESI 10/24/07
PW-8.1			BAM401	48.99636	122.72880	7/25/2007	165.0	760.0				135-280	0-153	8/23/2007	90.5	74.5	12.0	150.0	15.0	280.0	-115.0	525.0	40.1	13.1	2908-3089		I	AESI 10/24/07
PW-9	Boblett Street	S09	AGK382	48.99072	122.70887	7/10/1991	175.0	303.0		258.5-296.5		0-265		7/15/1991	84.2	90.8	8.0	271.5	-96.5	296.5	-121.5	200.0	145.0	1.4	330.0	0.005	I	Golder 11/17/95
PW-2D	District Well					5/7/2000	40.0	700.0	440-530	0-455				7/15/2000	-10.0	50.0	5.0	450.0	-410.0	530.0	-490.0	525.0	130.0	4.0	2300-5500	$1.9X10^{-3}$ - $1.1X10^{-3}$	D	GEI 4/30/01

Notes:
I = Intermediate Aquifer
D = Deep Aquifer

Table A-2
SUMMARY OF CITY/DISTRICT MONITORING WELLS

Well Number	Other Designations	Ecology Tag	Location		Well Construction Information															Well Yeild/Aquifer Parameters						
								Casing Depth					Static Water Levels			Screen/Open Interval											
			Latitude	Longitude	Construction Date	Ground Surface Elevation	Well Depth	6-inc	8-in	10-in	12-in	16-in	Date	Depth[1]	Elevation	Diameter (inches)	Depth to Top	Elevation Top	Depth to Bottom	Elevation Bottom	Discharge (gpm)	Drawdown (feet)	Specific Capacity (gmp/ft)	Aquifer Transmissivity (ft^2/d)	Aquifer Storativity	Hydro Unit	Comments/References
GWMP-1			48.99778	122.72105	8/31/1990	230.0	278.0		0-176.2				9/4/1990	140.0	90.0	7.5	176.2	53.8	186.5	43.5	6.3	25.0	0.3			I	
													10/2/1990	130.6	99.4												
													10/8/2007	134.2	95.8												AESI
													6/30/2008	132.6	97.4												AESI
GWMP-2			48.97937	122.67686	9/10/1990	175.0	303.0		0-83.5				9/10/1990	70.3	104.7	7.5	83.5	91.5	88.5	86.5	50.0					I	
													10/8/1990	70.8	104.2												
													6/30/2008	79.9	95.1												AESI
GWMP-3			48.99072	122.70887	9/14/1990	175.0	299.0		0-148				10/4/1990	85.0	90.1	7.5	148.0	27.0	161.3	13.7	396.0	44.8	8.8	4000.0		I	
MW-1					9/20/1994	450.0	217.0	0-209					9/16/1994	195.0	255.0	5.0	208.5	241.5	214.5	235.5						I	Well Inaccessible
													10/1/1994	129.9	320.1												
MW-2					10/30/1994	490.0	397.0																			I/D	Well Inaccessible

Notes:
[1] Below ground surface
I = Intermediate Aquifer
D = Deep Aquifer

ATTACHMENT 2

Well Logs

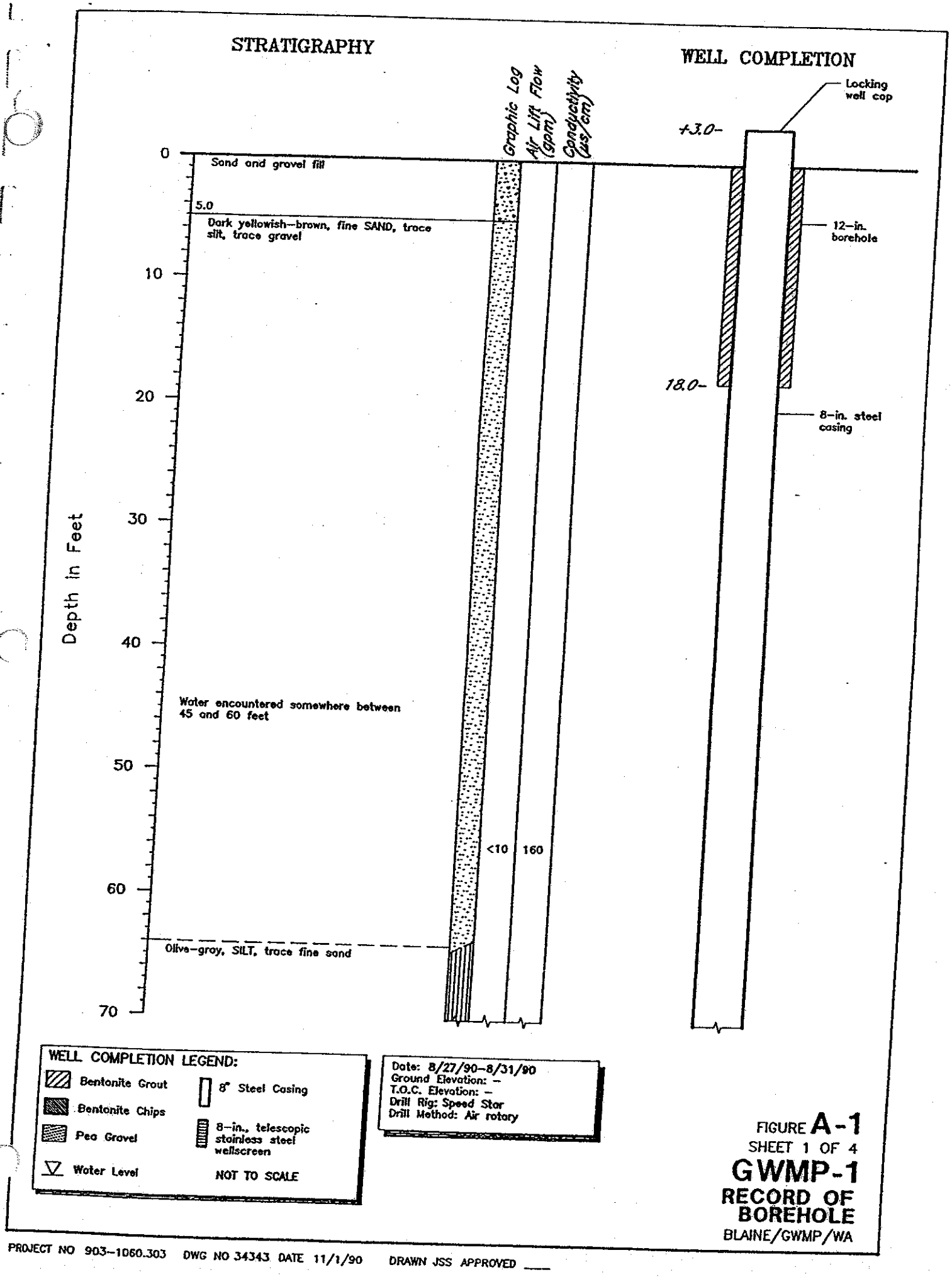

PROJECT NO 903-1060.303 DWG NO 34343 DATE 11/1/90 DRAWN JSS APPROVED ___

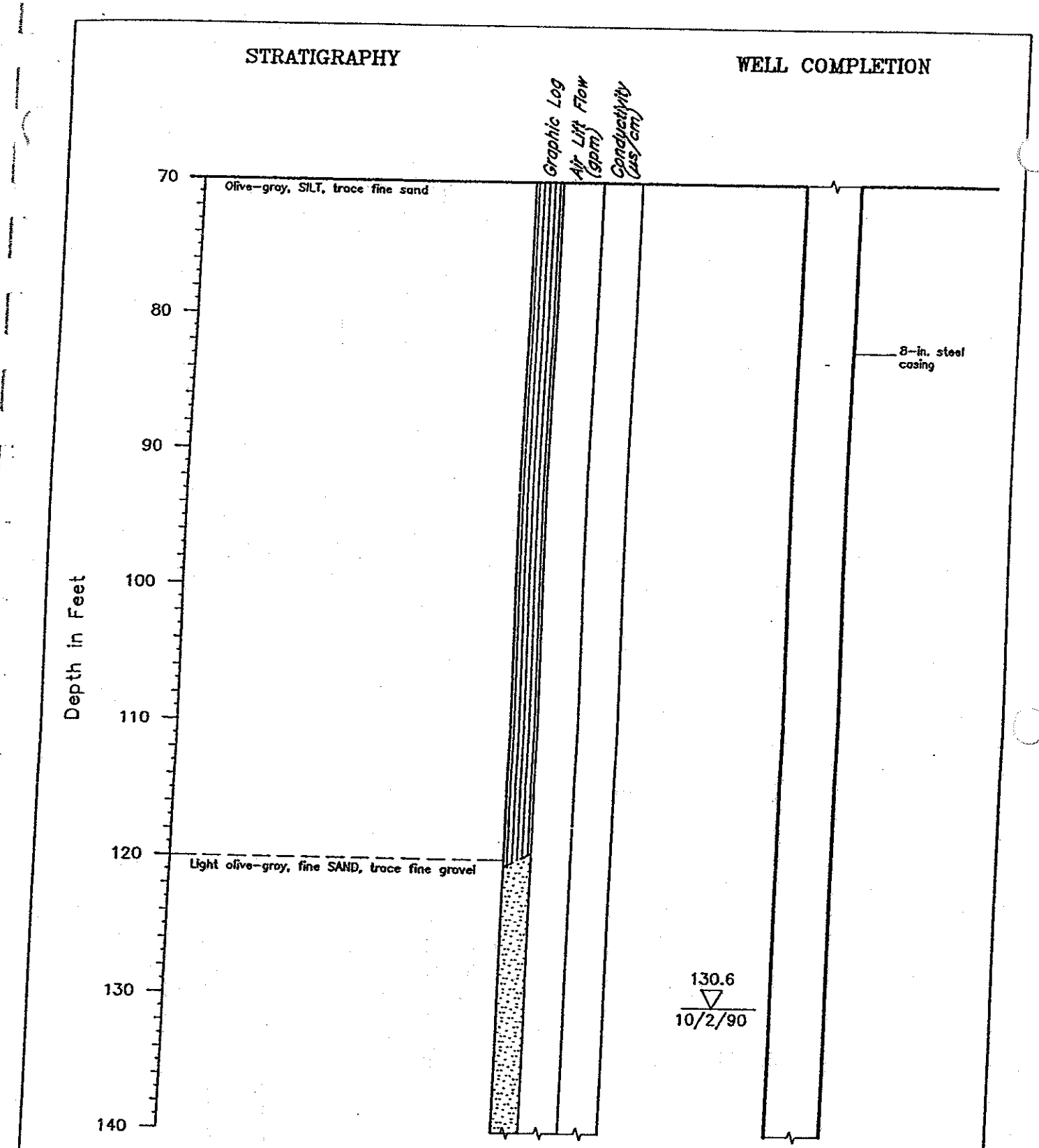

FIGURE **A-1**
SHEET 2 OF 4

GWMP-1
RECORD OF BOREHOLE

BLAINE/GWMP/WA

PROJECT NO 903-1060.303 DWG NO 34344 DATE 11/1/90 DRAWN JSS APPROVED ___

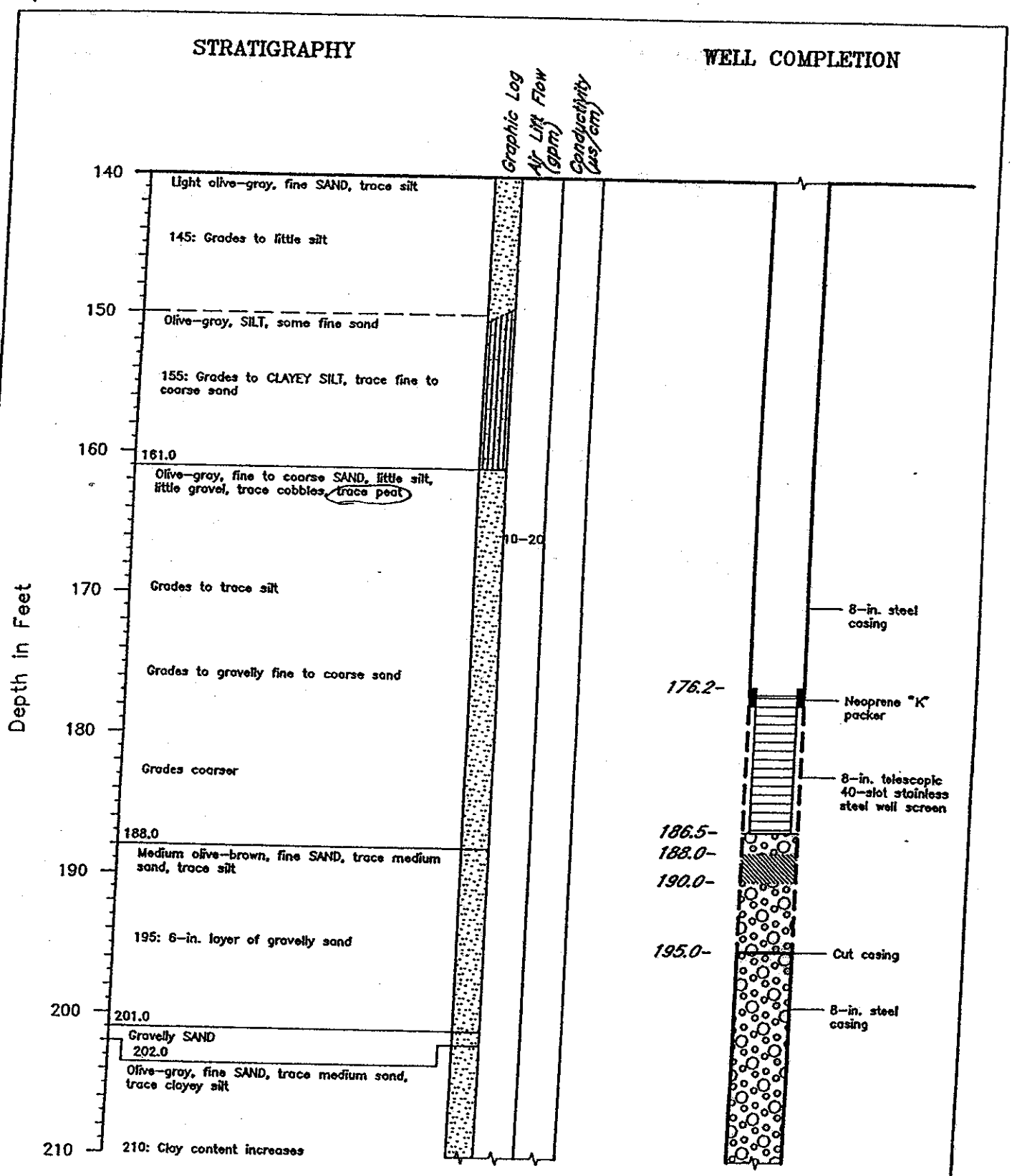

FIGURE **A-1**
SHEET 3 OF 4

GWMP-1
RECORD OF BOREHOLE

BLAINE/GWMP/WA

PROJECT NO 903-1060.303 DWG NO 34345 DATE 11/1/90 DRAWN JSS APPROVED ____

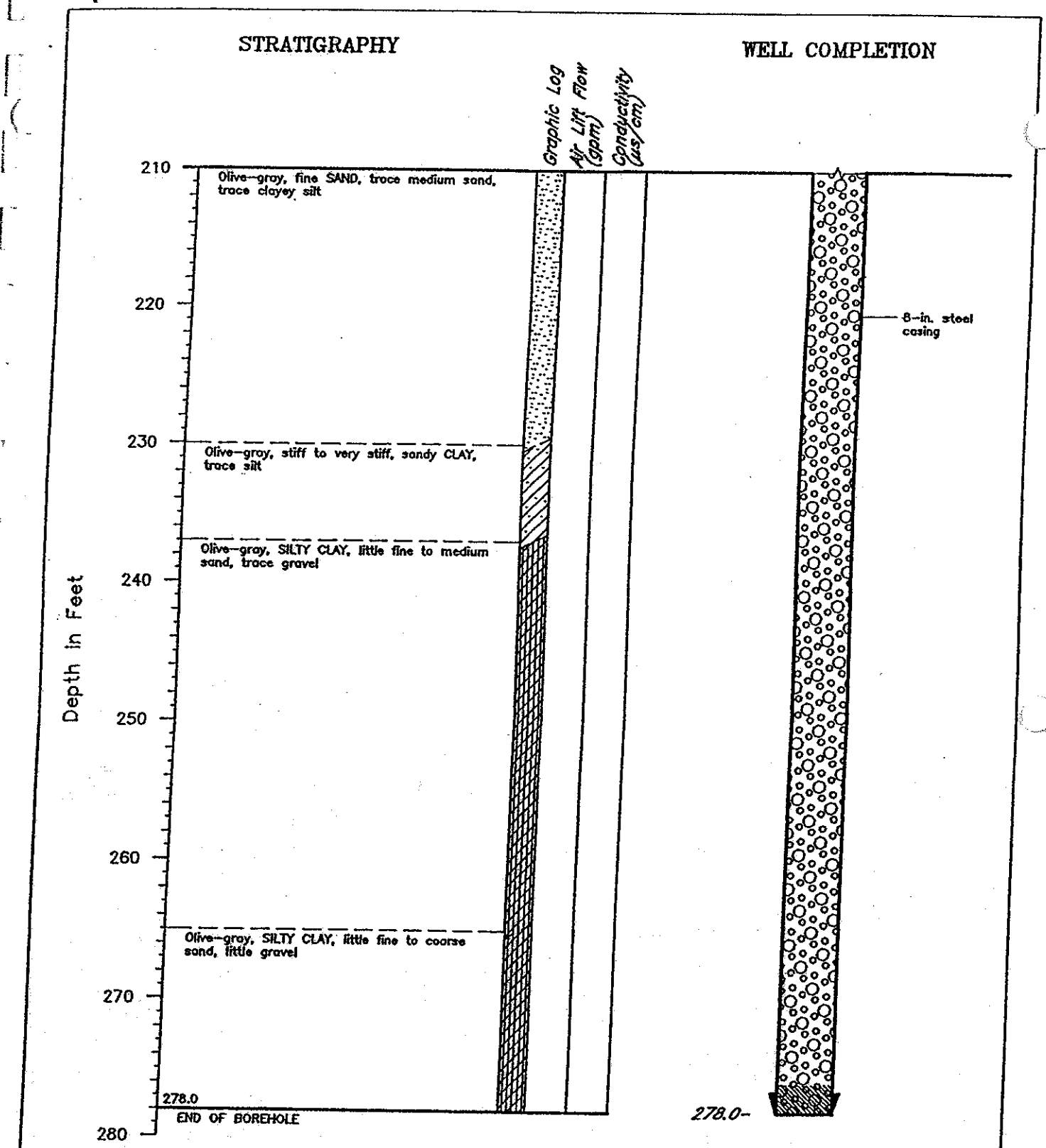

FIGURE **A-1**
SHEET 4 OF 4

GWMP-1
RECORD OF BOREHOLE

BLAINE/GWMP/WA

PROJECT NO 903-1060.303 DWG NO 34346 DATE 11/1/90 DRAWN JSS APPROVED ____

Golder 912195

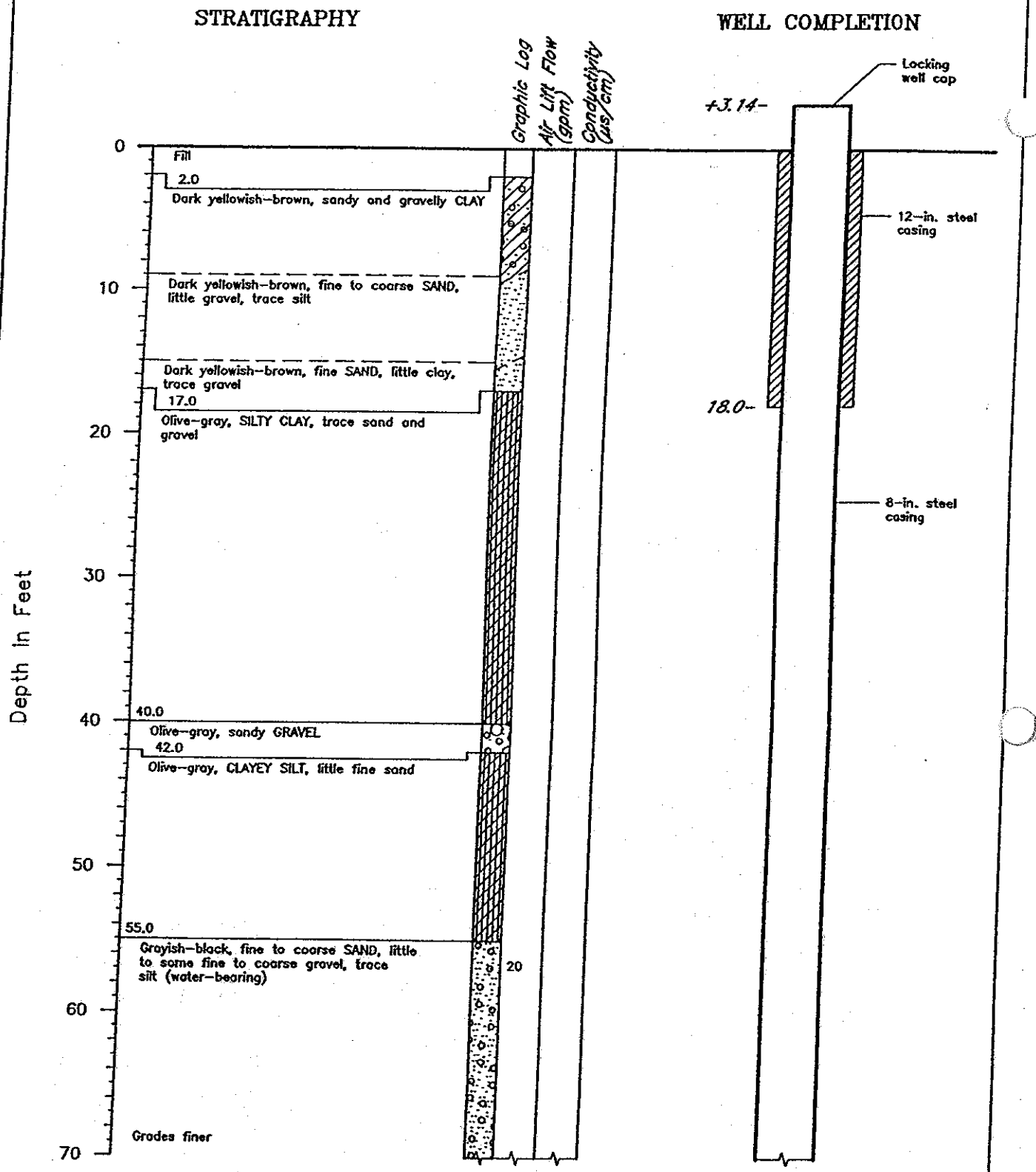

WELL COMPLETION LEGEND:

- Bentonite Grout
- Bentonite Chips
- Pea Gravel
- Water Level
- 8" Steel Casing
- 8-in., telescopic stainless steel wellscreen

NOT TO SCALE

Date: 9/4/90-9/10/90
Ground Elevation: --
T.O.C. Elevation: --
Drill Rig: Speed Star
Drill Method: Air rotary

FIGURE A-2
SHEET 1 OF 5

GWMP-2
RECORD OF BOREHOLE

BLAINE/GWMP/WA

PROJECT NO 903-1060.303 DWG NO 34333 DATE 11/1/90 DRAWN JSS APPROVED ___

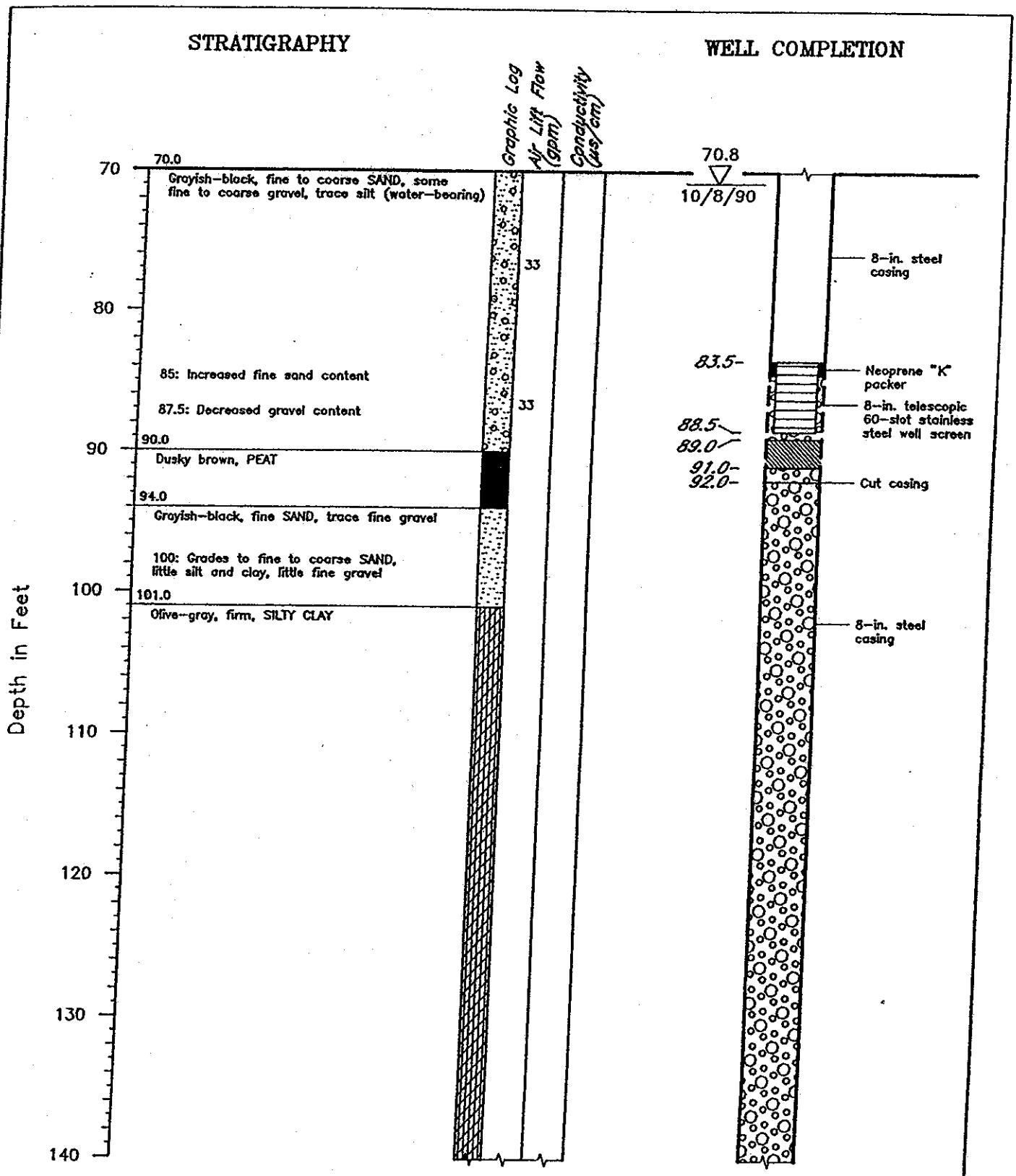

FIGURE **A-2**
SHEET 2 OF 5

GWMP-2
RECORD OF BOREHOLE

BLAINE/GWMP/WA

PROJECT NO 903-1060.303 DWG NO 34334 DATE 11/1/90 DRAWN JSS APPROVED ___

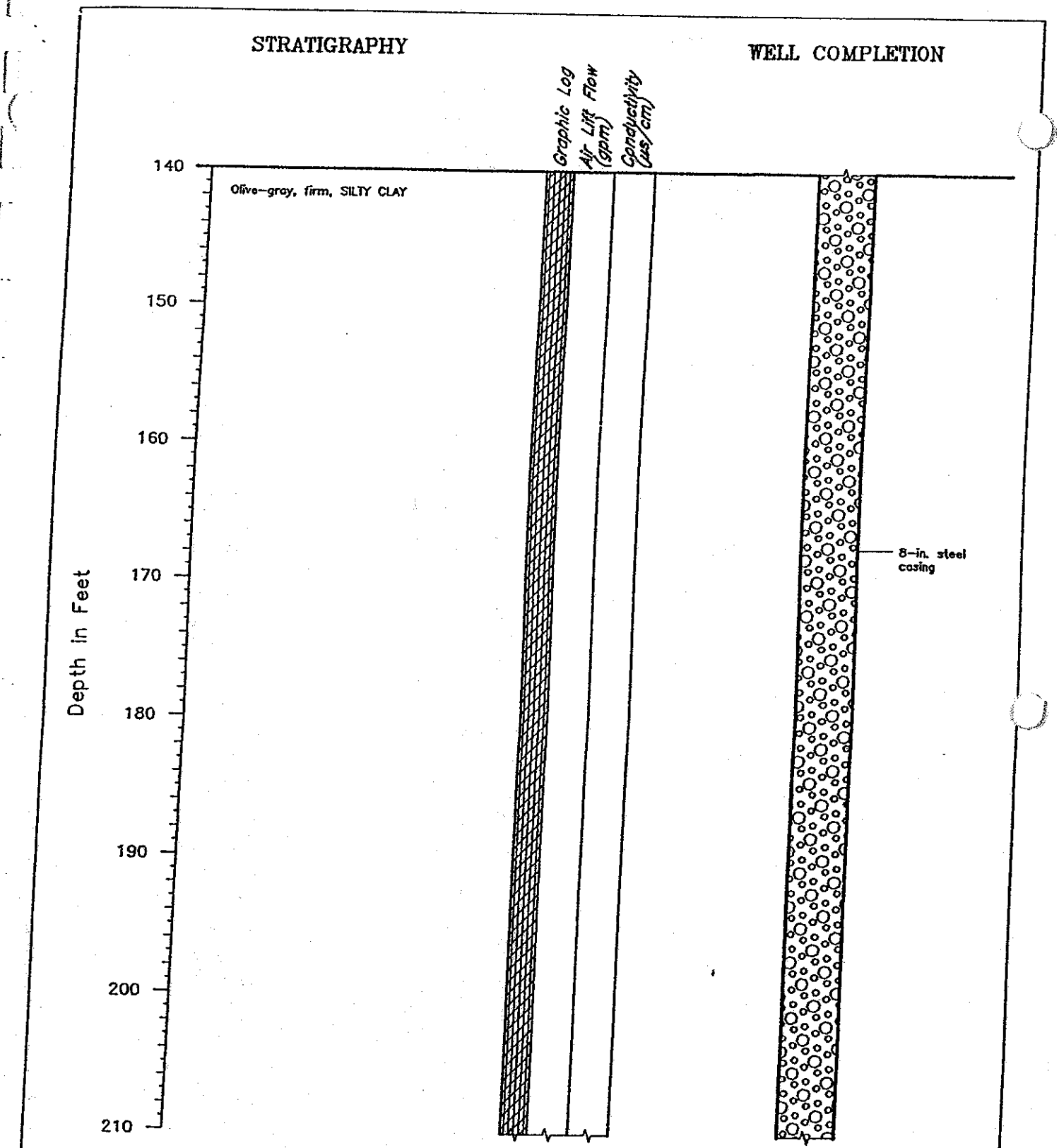

FIGURE **A-2**
SHEET 3 OF 5
GWMP-2
RECORD OF BOREHOLE
BLAINE/GWMP/WA

PROJECT NO 903-1060.303 DWG NO 34335 DATE 11/1/90 DRAWN JSS APPROVED ____

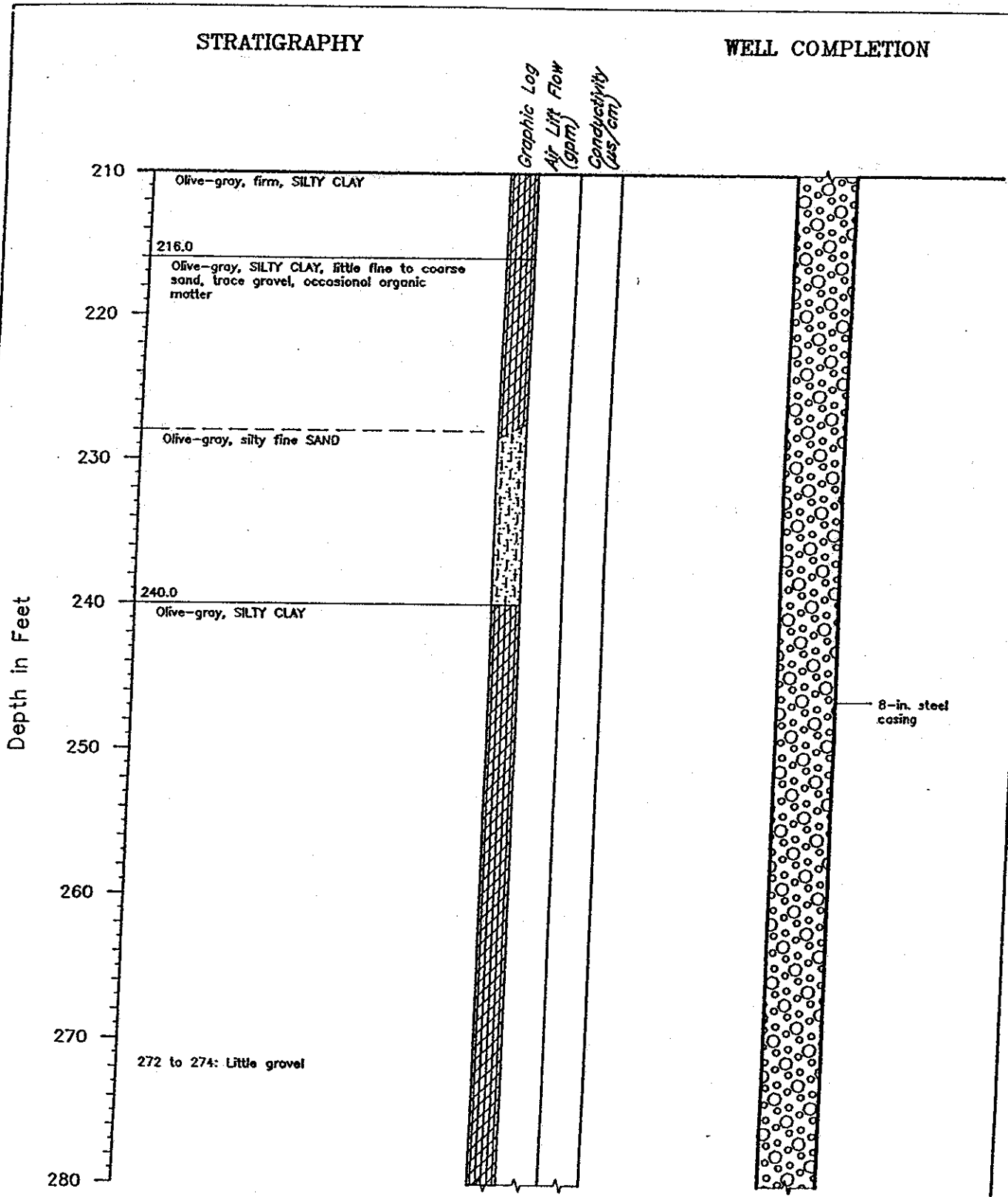

FIGURE **A-2**
SHEET 4 OF 5

GWMP-2
RECORD OF BOREHOLE

BLAINE/GWMP/WA

PROJECT NO 903-1060.303 DWG NO 34336 DATE 11/1/90 DRAWN JSS APPROVED ____

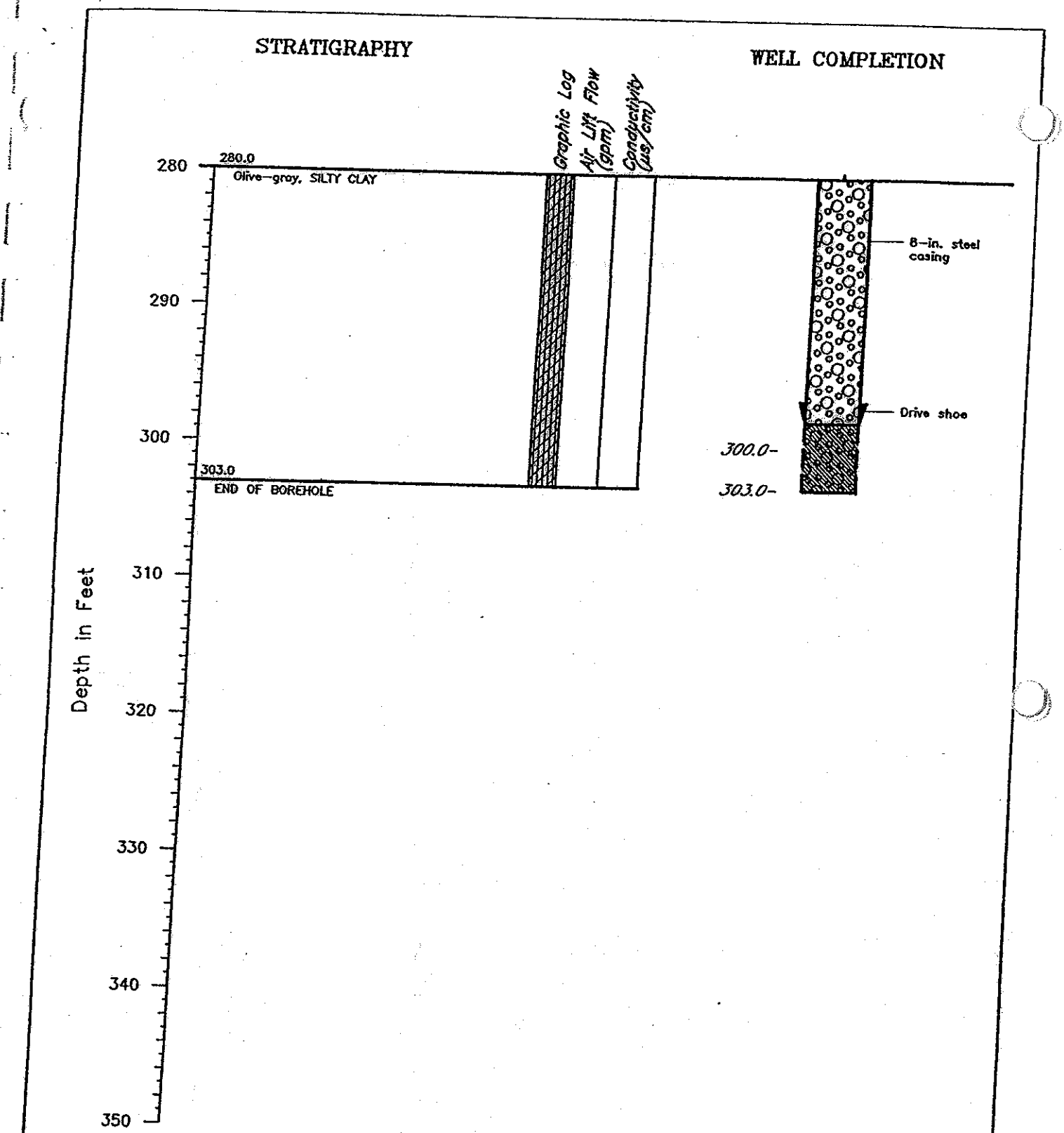

FIGURE **A-2**
SHEET 5 OF 5
GWMP-2
RECORD OF BOREHOLE
BLAINE/GWMP/WA

PROJECT NO 903-1060.303 DWG NO 34337 DATE 10/29/90 DRAWN JSS APPROVED ___

Golder 9/2/92 / 11/17/95

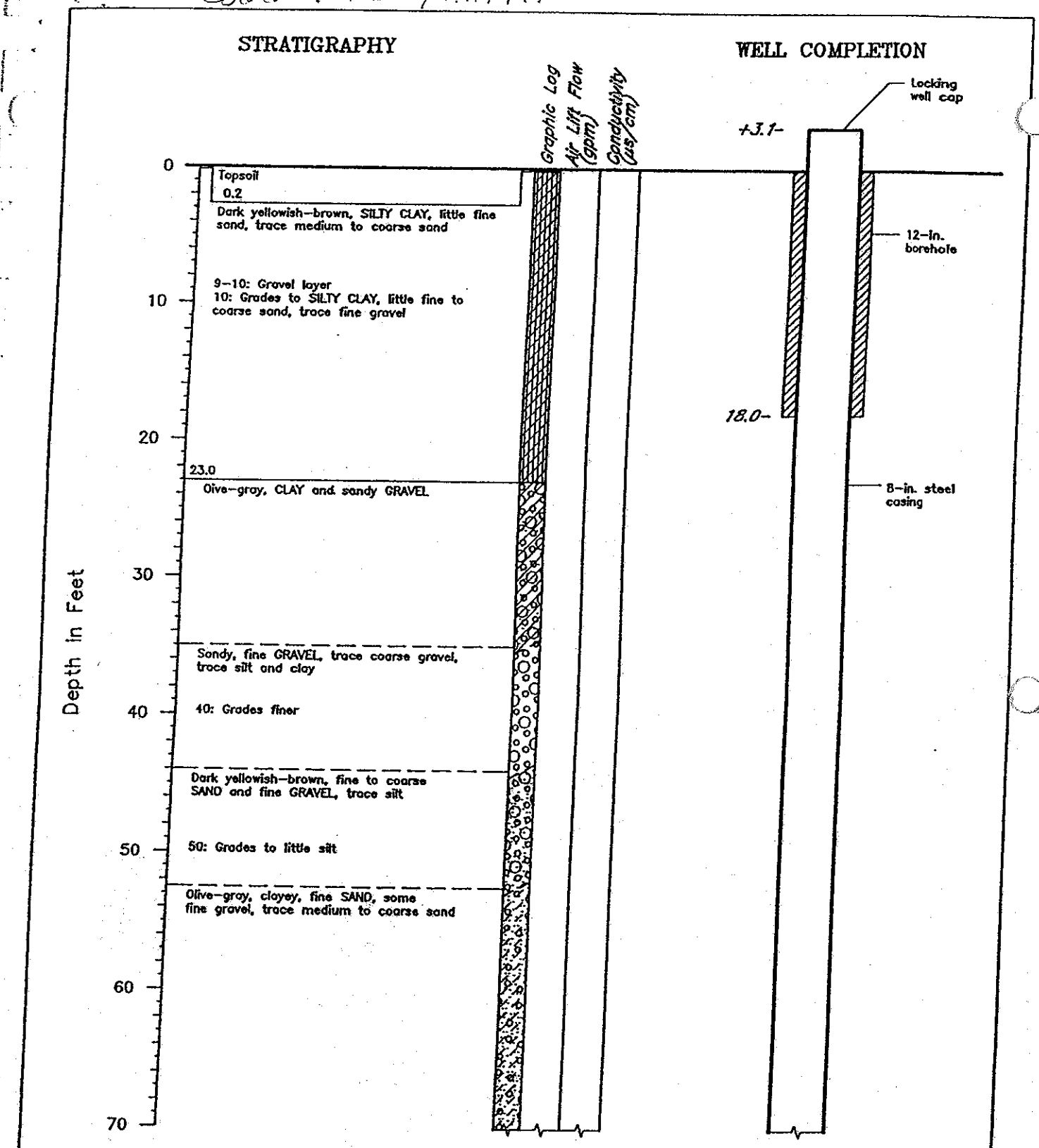

WELL COMPLETION LEGEND:

- Bentonite Grout
- Bentonite Chips
- Pea Gravel
- Water Level
- 8" Steel Casing
- 8-in., telescopic stainless steel wellscreen

NOT TO SCALE

Date: 9/10/90-9/14/90
Ground Elevation: --
T.O.C. Elevation: --
Drill Rig: Speed Star
Drill Method: Air rotary

FIGURE A-3
SHEET 1 OF 5
GWMP-3
RECORD OF BOREHOLE
BLAINE/GWMP/WA

PROJECT NO 903-1060.303 DWG NO 34338 DATE 11/1/90 DRAWN JSS APPROVED ___

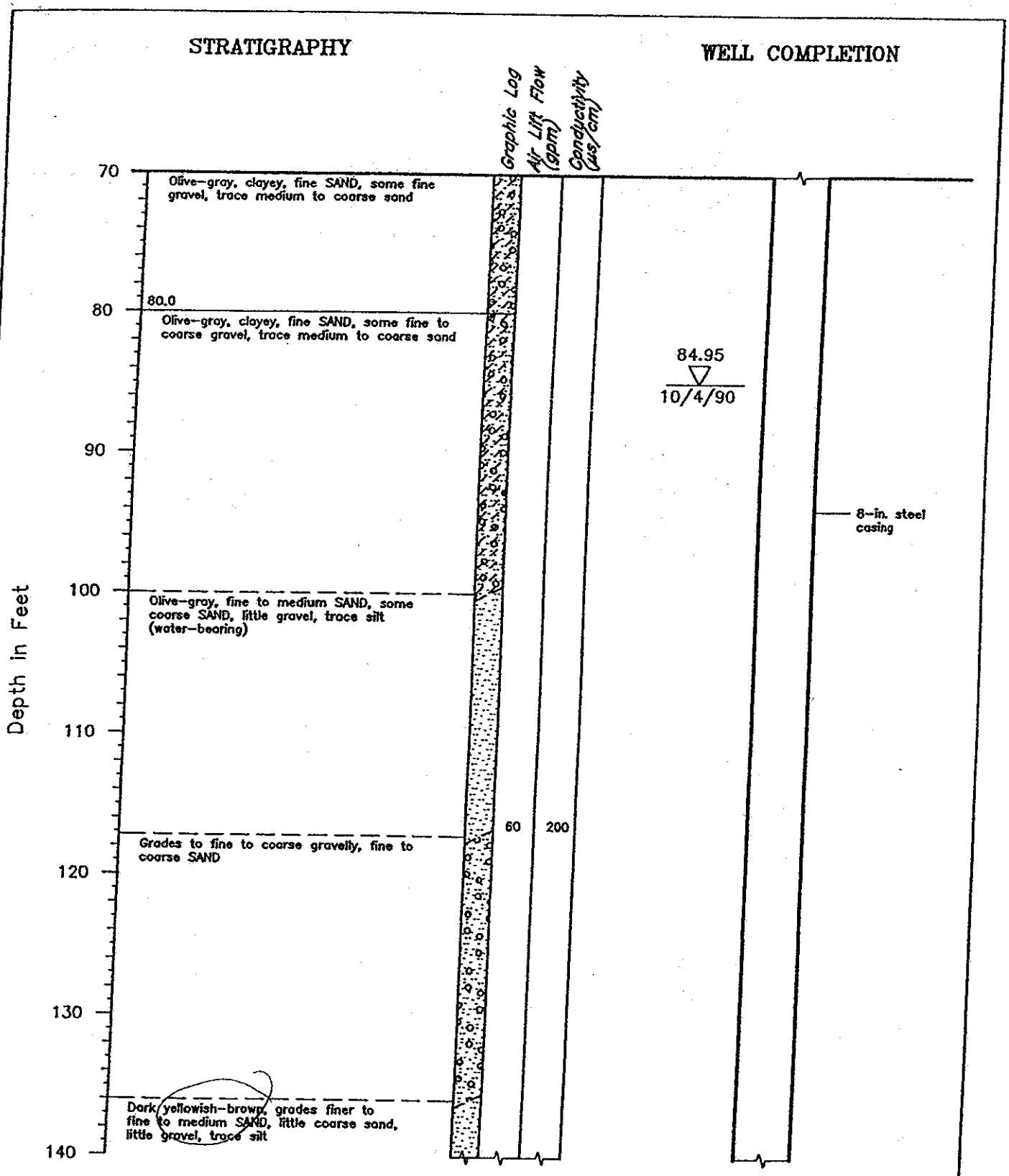

FIGURE **A-3**
SHEET 2 OF 5

GWMP-3
RECORD OF BOREHOLE

BLAINE/GWMP/WA

PROJECT NO 903-1060.303 DWG NO 34339 DATE 11/1/90 DRAWN JSS APPROVED ____

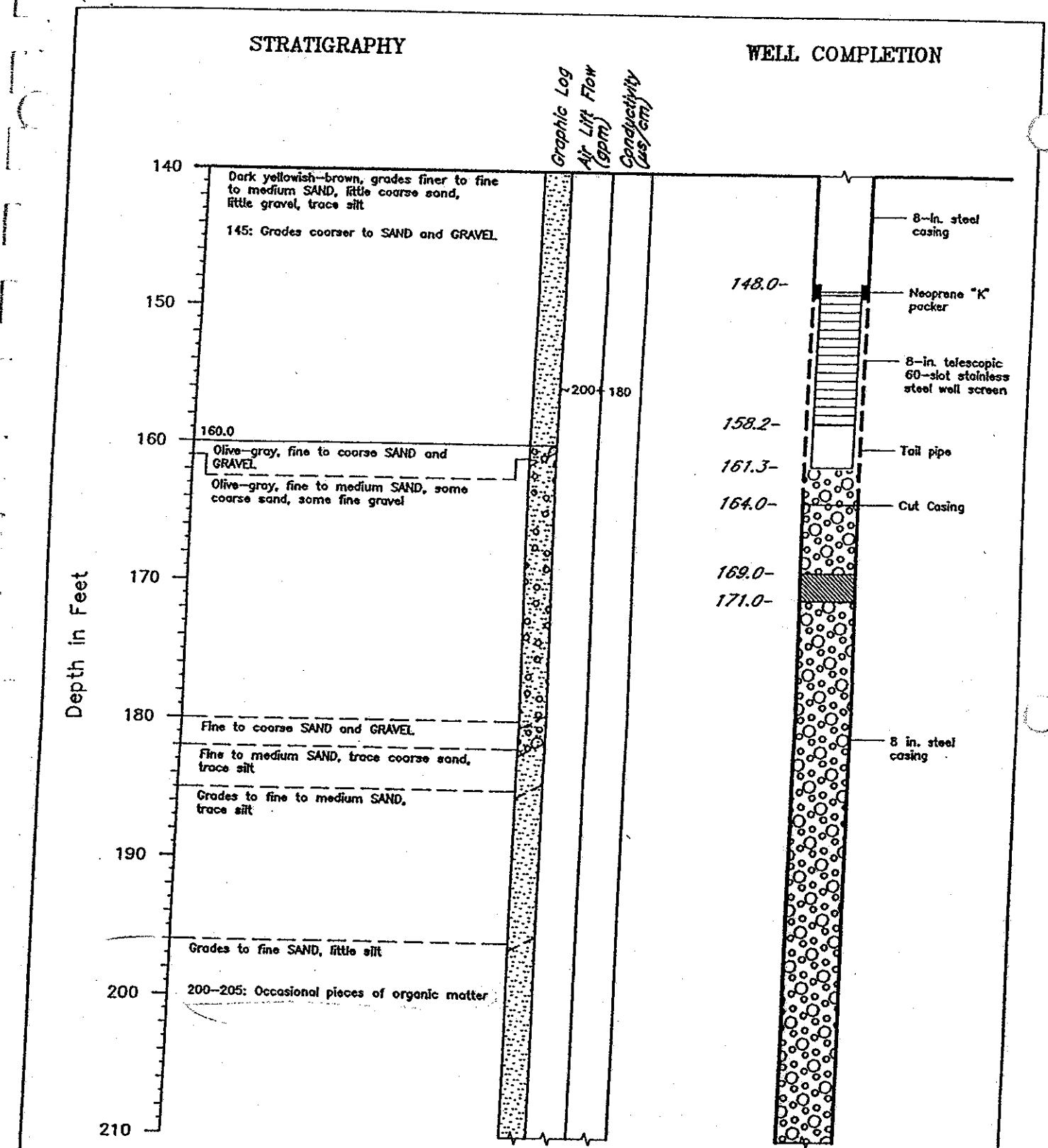

FIGURE **A-3**
SHEET 3 OF 5

GWMP-3
RECORD OF BOREHOLE
BLAINE/GWMP/WA

PROJECT NO 903-1060.303 DWG NO 34340 DATE 11/1/90 DRAWN JSS APPROVED ___

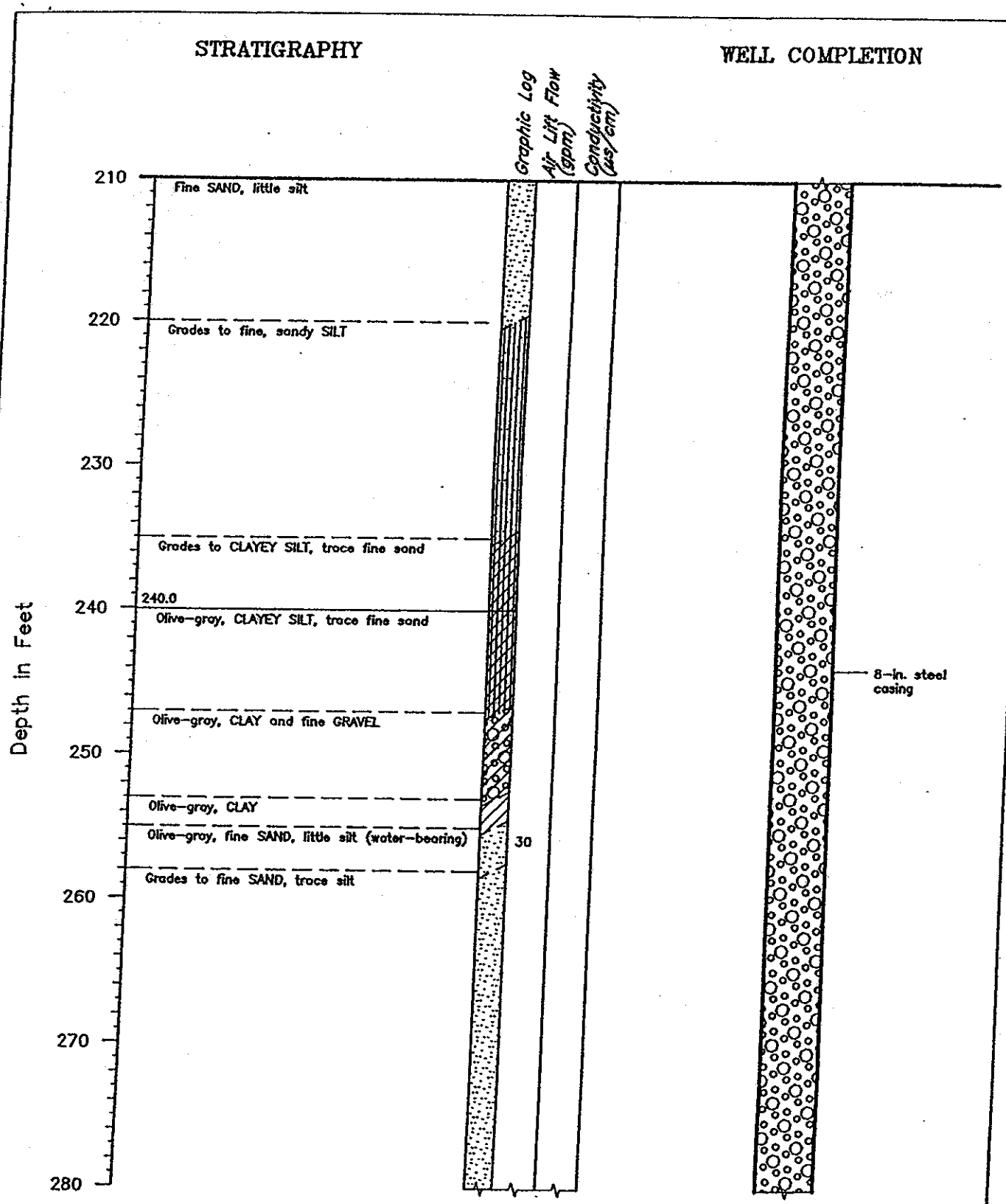

FIGURE **A-3**
SHEET 4 OF 5
GWMP-3
RECORD OF BOREHOLE
BLAINE/GWMP/WA

PROJECT NO 903-1060.303 DWG NO 34341 DATE 11/1/90 DRAWN JSS APPROVED ____

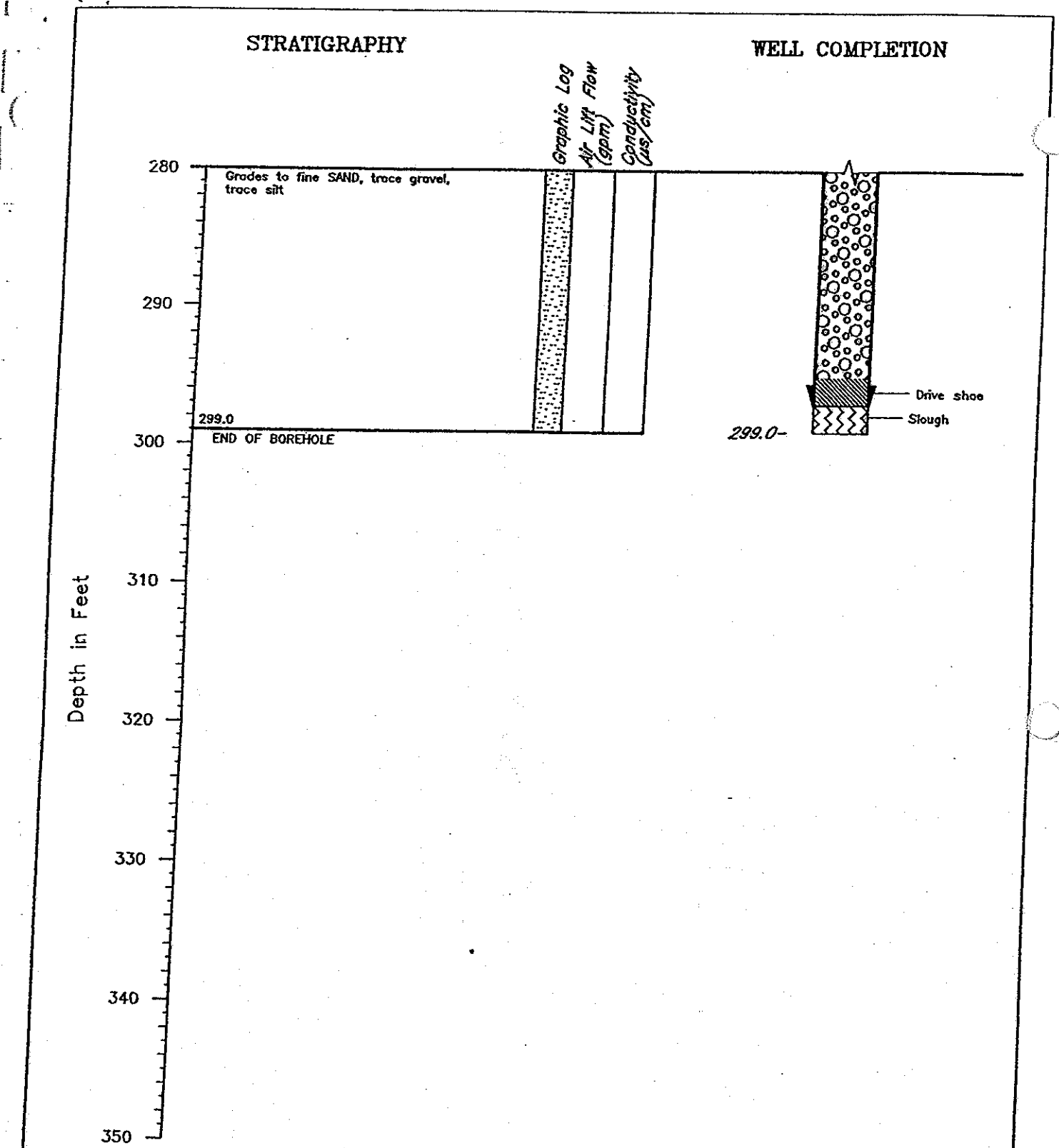

FIGURE **A-3**
SHEET 5 OF 5

GWMP-3
RECORD OF BOREHOLE

BLAINE/GWMP/WA

PROJECT NO 903-1060.303 DWG NO 34342 DATE 11/1/90 DRAWN JSS APPROVED ____

Emcon 2/8/?

LOG OF EXPLORATORY BORING

PROJECT NAME	Vicwood Development	BORING NO.	MW
LOCATION		PAGE	1 OF 1
DRILLED BY	B and C Well Drilling	GROUND ELEV.	450.00'
DRILL METHOD	Air Rotary	TOTAL DEPTH	217.00'
LOGGED BY	Sharon Burkett	DATE COMPLETED	09/20/94

GROUND WATER LEVELS	DEPTH IN FEET	SAMPLES	LITHOLOGIC COLUMN	WELL DETAILS	LITHOLOGIC DESCRIPTION
					0 to 1.0 foot: TOPSOIL
					0 to 45.0 feet: SILTY CLAY (CL), gray, soft, low to medium plasticity, trace fine sand, damp. (UNIT A/B?)
	5				
	10				
	15				
	20				

REMARKS

EMCON Northwest, Inc.

LOG OF EXPLORATORY BORING

PROJECT NAME Vicwood Development
LOCATION
DRILLED BY B and C Well Drilling
DRILL METHOD Air Rotary
LOGGED BY Sharon Burkett

BORING NO. MW-1
PAGE 2 OF 11
GROUND ELEV. 450.00'
TOTAL DEPTH 217.00'
DATE COMPLETED 09/20/94

GROUND WATER LEVELS	DEPTH IN FEET	SAMPLES	LITHOLOGIC COLUMN	WELL DETAILS	LITHOLOGIC DESCRIPTION
					0 to 45.0 feet: SILTY CLAY (CL), gray, soft, low to medium plasticity, trace fine sand, damp. (UNIT A/B?)

25
30
35
40

REMARKS

EMCON Northwest, Inc.

LOG OF EXPLORATORY BORING

PROJECT NAME Vicwood Development
LOCATION
DRILLED BY B and C Well Drilling
DRILL METHOD Air Rotary
LOGGED BY Sharon Burkett

BORING NO. MW-1
PAGE 3
GROUND ELEV. 450.00'
TOTAL DEPTH 217.00'
DATE COMPLETED 09/20/94

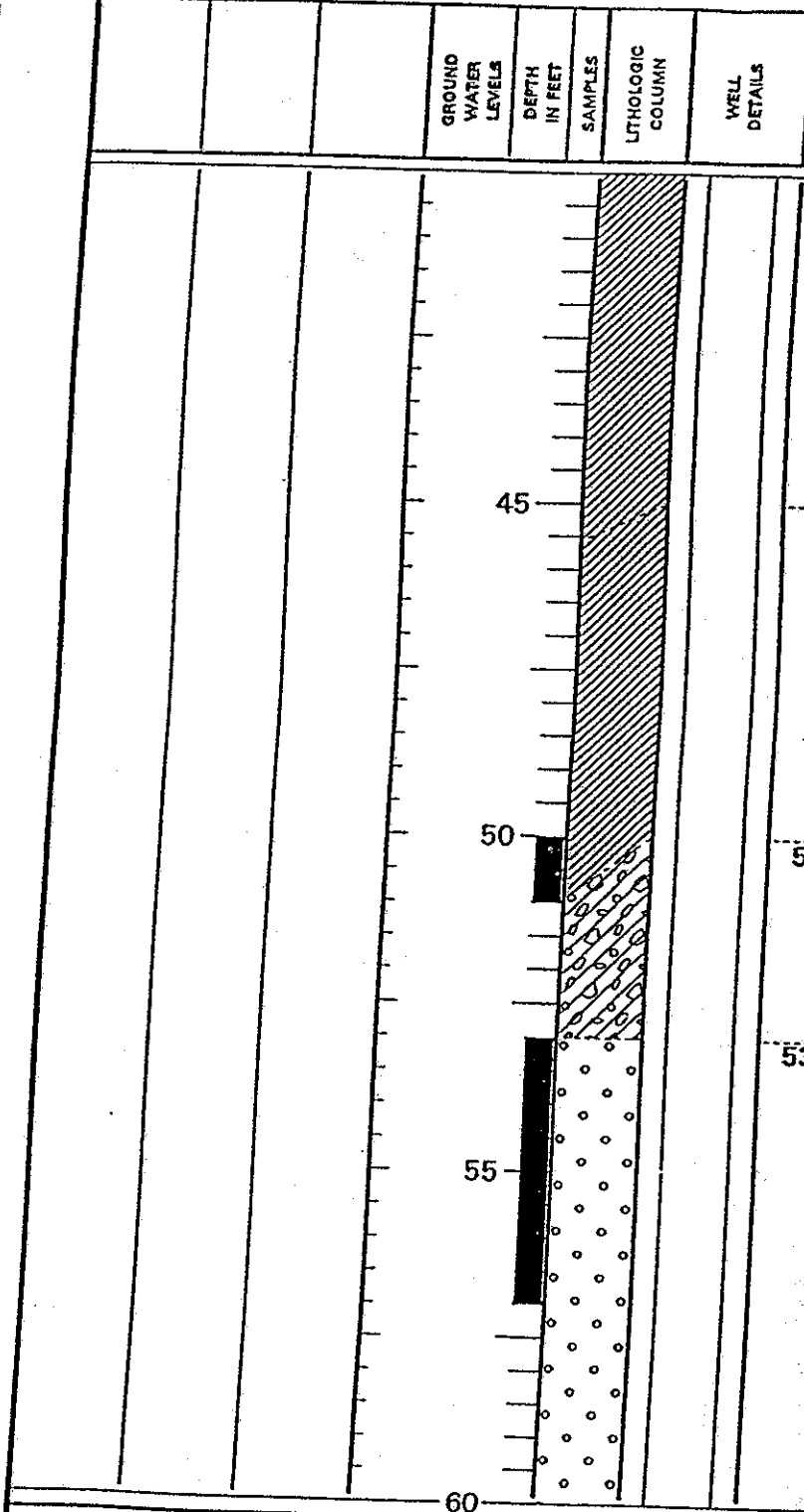

LITHOLOGIC DESCRIPTION

0 to 45.0 feet: SILTY CLAY (CL), gray, soft, low to medium plasticity, trace fine sand, damp. (UNIT A/B?)

45.0 to 50.0 feet: SILTY CLAY (CL), with gravel, gray, soft, low to medium plasticity, trace to few fine sand, few fine to medium gravel, subrounded, damp. (UNIT A/B?)

50.0 to 53.0 feet: CLAYEY GRAVEL (GC), gray, fine subrounded gravel, little medium sand, trace coarse sand, wet.

53.0 to 60.0 feet: SANDY GRAVEL (GP), gray, fine to medium gravel, some well-graded sand, few fines, damp to moist. (UNIT C1?)

REMARKS

LOG OF EXPLORATORY BORING

PROJECT NAME	Vicwood Development	BORING NO.	MW- 1
LOCATION		PAGE	4 OF 11
DRILLED BY	B and C Well Drilling	GROUND ELEV.	450.00'
DRILL METHOD	Air Rotary	TOTAL DEPTH	217.00'
LOGGED BY	Sharon Burkett	DATE COMPLETED	09/20/94

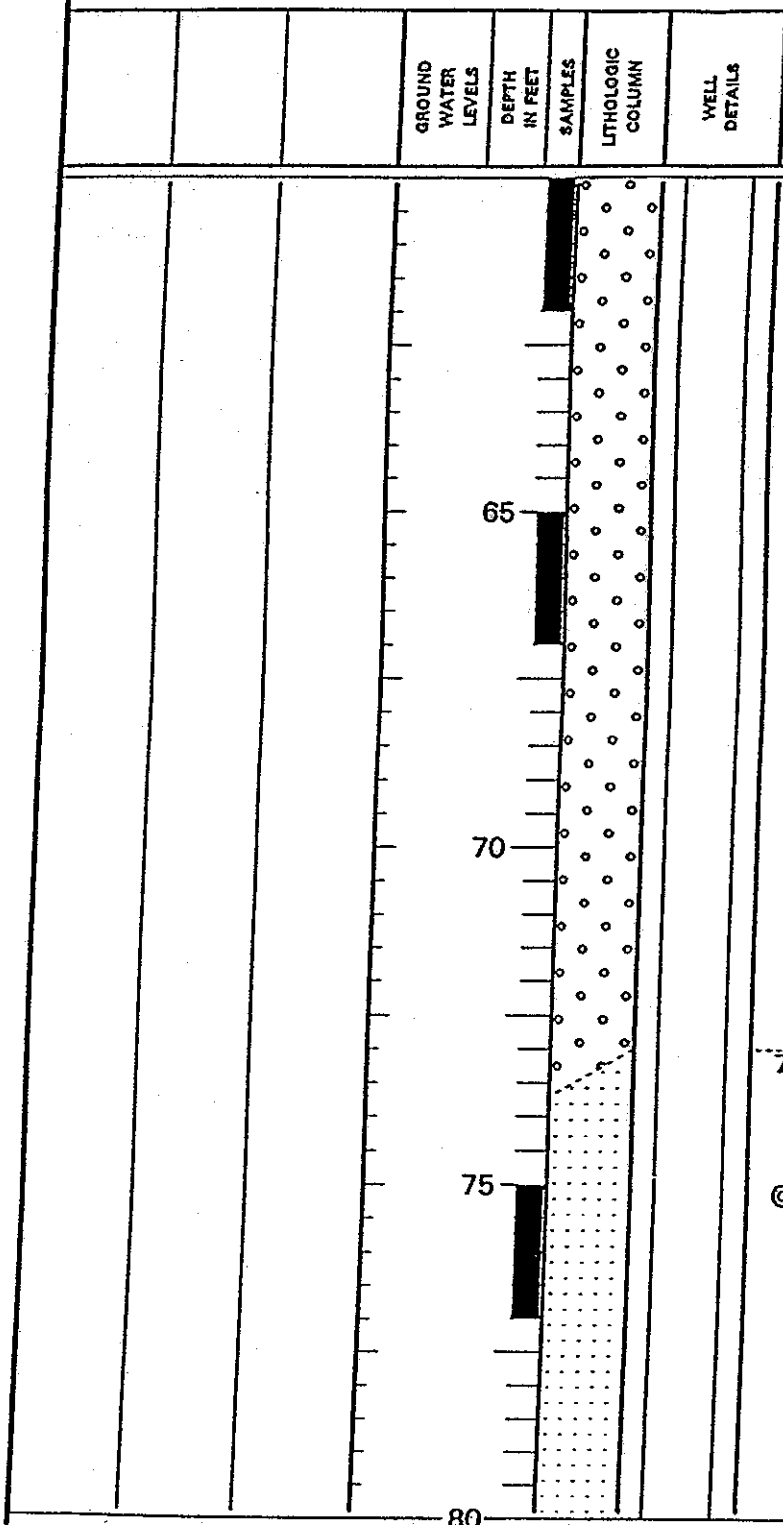

LITHOLOGIC DESCRIPTION

60.0 to 73.0 feet: SANDY GRAVEL (GP), gray brown, fine to medium subrounded gravel, little fine to medium sand, few fines, damp to moist. (UNIT C17)

@ 60.0 feet: hard drilling.

@ 65.0 feet: gravel coarsens.

73.0 to 80.0 feet: GRAVELLY SAND (SP), gray brown, fine sand, trace to few coarse sand, few fines, little fine to medium subrounded gravel, damp. (UNIT C17)

@ 75.0 feet: increasing moisture.

REMARKS

LOG OF EXPLORATORY BORING

PROJECT NAME	Vicwood Development	BORING NO.	MW-5
LOCATION		PAGE	5 of 11
DRILLED BY	B and C Well Drilling	GROUND ELEV.	450.00'
DRILL METHOD	Air Rotary	TOTAL DEPTH	217.00'
LOGGED BY	Sharon Burkett	DATE COMPLETED	09/20/94

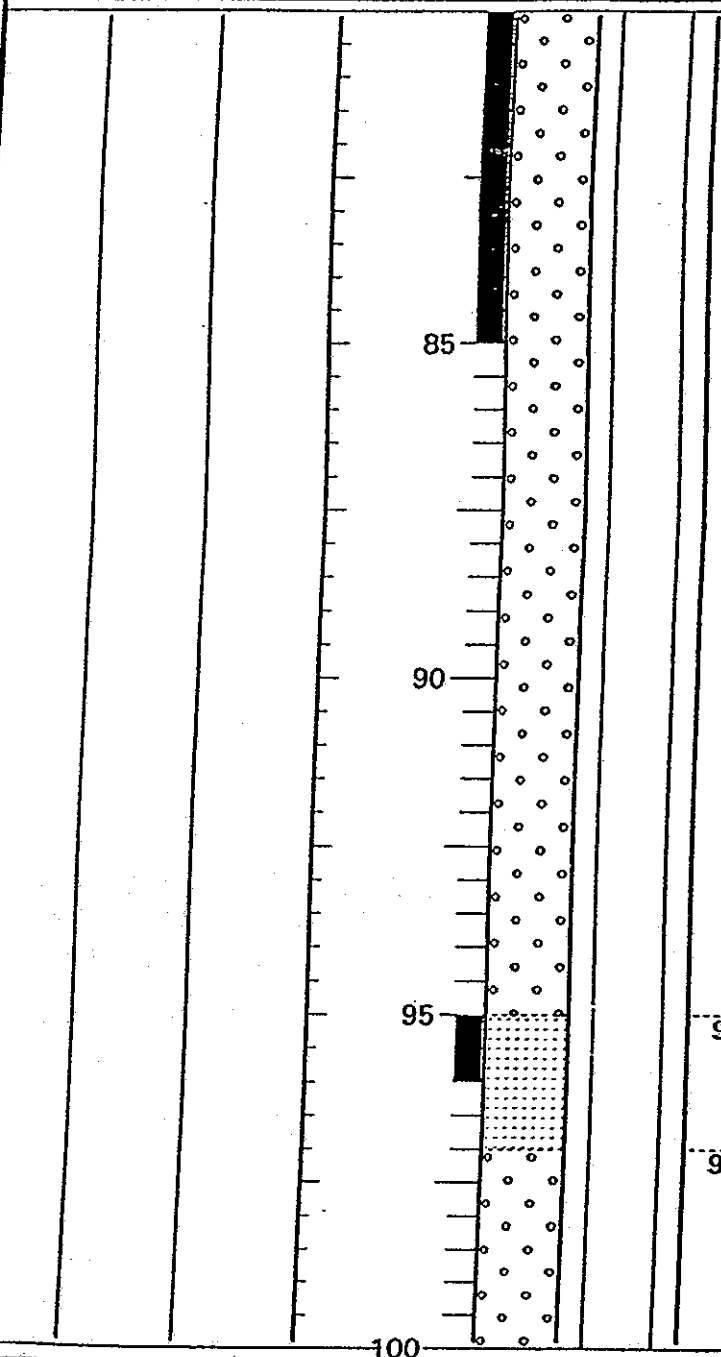

LITHOLOGIC DESCRIPTION

80.0 to 95.0 feet: SANDY GRAVEL (GP), gray brown, fine to medium rounded to subrounded gravel, little well-graded sand, trace fines, damp. (UNIT C17)

@ 80.0 feet: casing dropped 3 feet quickly, driller indicated there was a "cavern under the pipe".

@ 90.0 feet: fine gravel.

95.0 to 97.0 feet: SAND (SW), gray brown, trace fine gravel, damp.

97.0 to 105.0 feet: SANDY GRAVEL (GP), gray brown, fine to medium gravel, some well-graded sand, trace to few fines, moist.

REMARKS

LOG OF EXPLORATORY BORING

PROJECT NAME Vicwood Development
LOCATION
DRILLED BY B and C Well Drilling
DRILL METHOD Air Rotary
LOGGED BY Sharon Burkett

BORING NO. MW- 1
PAGE 6 OF 11
GROUND ELEV. 450.00'
TOTAL DEPTH 217.00'
DATE COMPLETED 09/20/94

GROUND WATER LEVELS	DEPTH IN FEET	SAMPLES	LITHOLOGIC COLUMN	WELL DETAILS	LITHOLOGIC DESCRIPTION
	105				97.0 to 105.0 feet: SANDY GRAVEL (GP), gray brown, fine to medium gravel, some well-graded sand, trace to few fines, moist.
					105.0 to 120.0 feet: GRAVELLY SAND (SW), gray brown, little to some fine gravel, moist. (UNIT C1?)
	110				
	115				
	120				

REMARKS

LOG OF EXPLORATORY BORING

PROJECT NAME Vicwood Development
LOCATION
DRILLED BY B and C Well Drilling
DRILL METHOD Air Rotary
LOGGED BY Sharon Burkett

BORING NO. MW-1
PAGE 7 of
GROUND ELEV. 450.
TOTAL DEPTH 217.00'
DATE COMPLETED 09/20/94

GROUND WATER LEVELS	DEPTH IN FEET	SAMPLES	LITHOLOGIC COLUMN	WELL DETAILS	LITHOLOGIC DESCRIPTION
	125				120.0 to 134.0 feet: GRAVELLY SAND (SW), gray brown, some well-graded gravel, trace cobbles, dry to damp. (UNIT C1?) @ 125.0 feet: harder drilling, color change to gray.
	130				
	135				134.0 to 135.0 feet: BOULDER 135.0 to 145.0 feet: SANDY SILT WITH GRAVEL (ML), gray, little well-graded sand, some fine to medium subrounded gravel, dry to damp. (UNIT A/B?)
	140				

REMARKS

LOG OF EXPLORATORY BORING

PROJECT NAME	Vicwood Development	BORING NO.	MW- 1
LOCATION		PAGE	8 OF 11
DRILLED BY	B and C Well Drilling	GROUND ELEV.	450.00'
DRILL METHOD	Air Rotary	TOTAL DEPTH	217.00'
LOGGED BY	Sharon Burkett	DATE COMPLETED	09/20/94

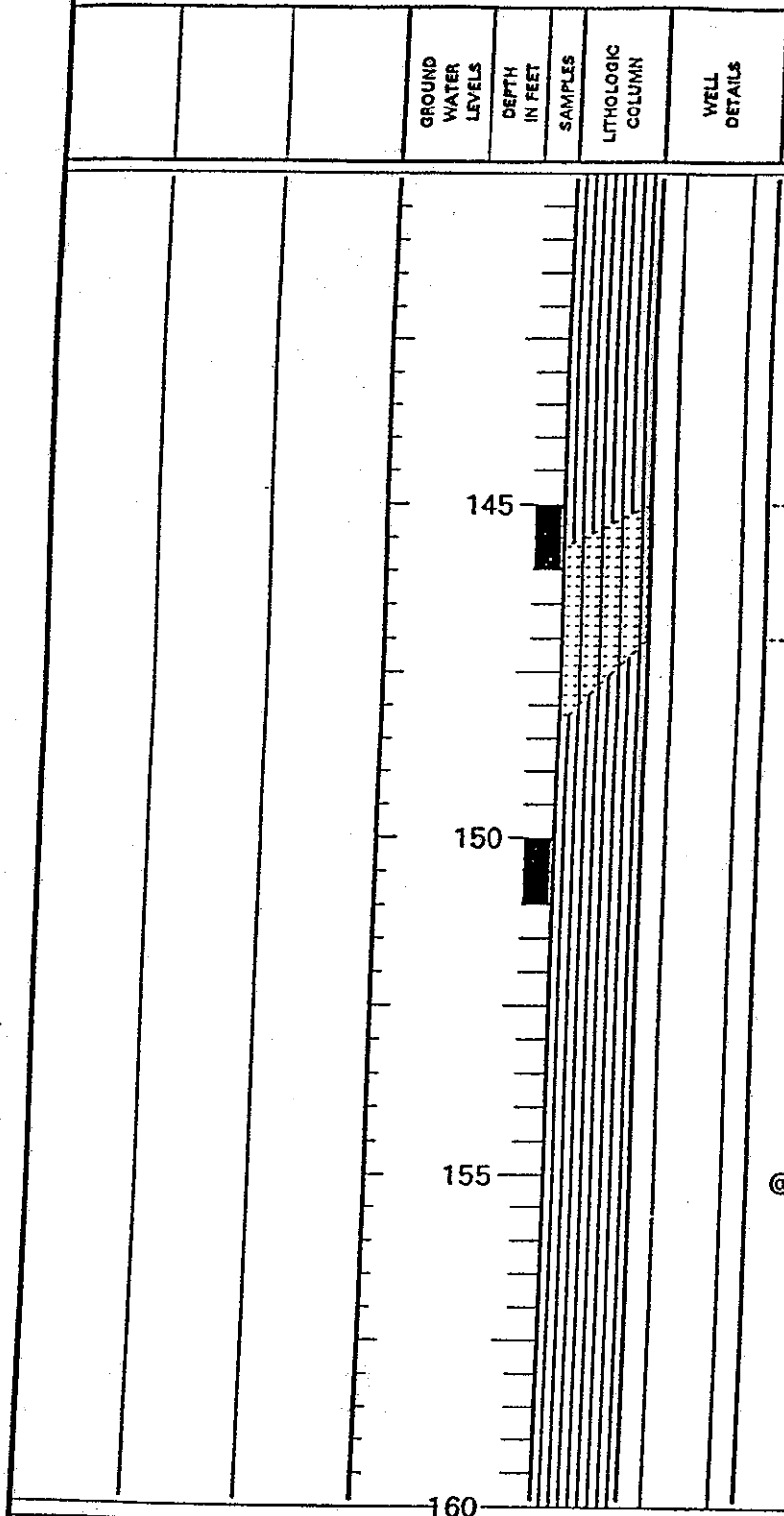

LITHOLOGIC DESCRIPTION

135.0 to 145.0 feet: SANDY SILT WITH GRAVEL (ML), gray, little well-graded sand, some fine to medium subrounded gravel, dry to damp. (UNIT A/B?)

145.0 to 147.0 feet: SILTY SAND WITH GRAVEL (SW-SM), gray, trace to few fine to medium subrounded gravel, few fines, damp.

147.0 to 160.0 feet: SANDY SILT (ML), gray, some fine sand, trace coarse sand, trace fine gravel, low plasticity, damp. (UNIT A/B?)

@ 155.0 feet: increased moisture, moist, few fine gravel.

REMARKS

LOG OF EXPLORATORY BORING

PROJECT NAME	Vicwood Development	BORING NO.	MW-1
LOCATION		PAGE	9 of 1
DRILLED BY	B and C Well Drilling	GROUND ELEV.	450.00'
DRILL METHOD	Air Rotary	TOTAL DEPTH	217.00'
LOGGED BY	Sharon Burkett	DATE COMPLETED	09/20/94

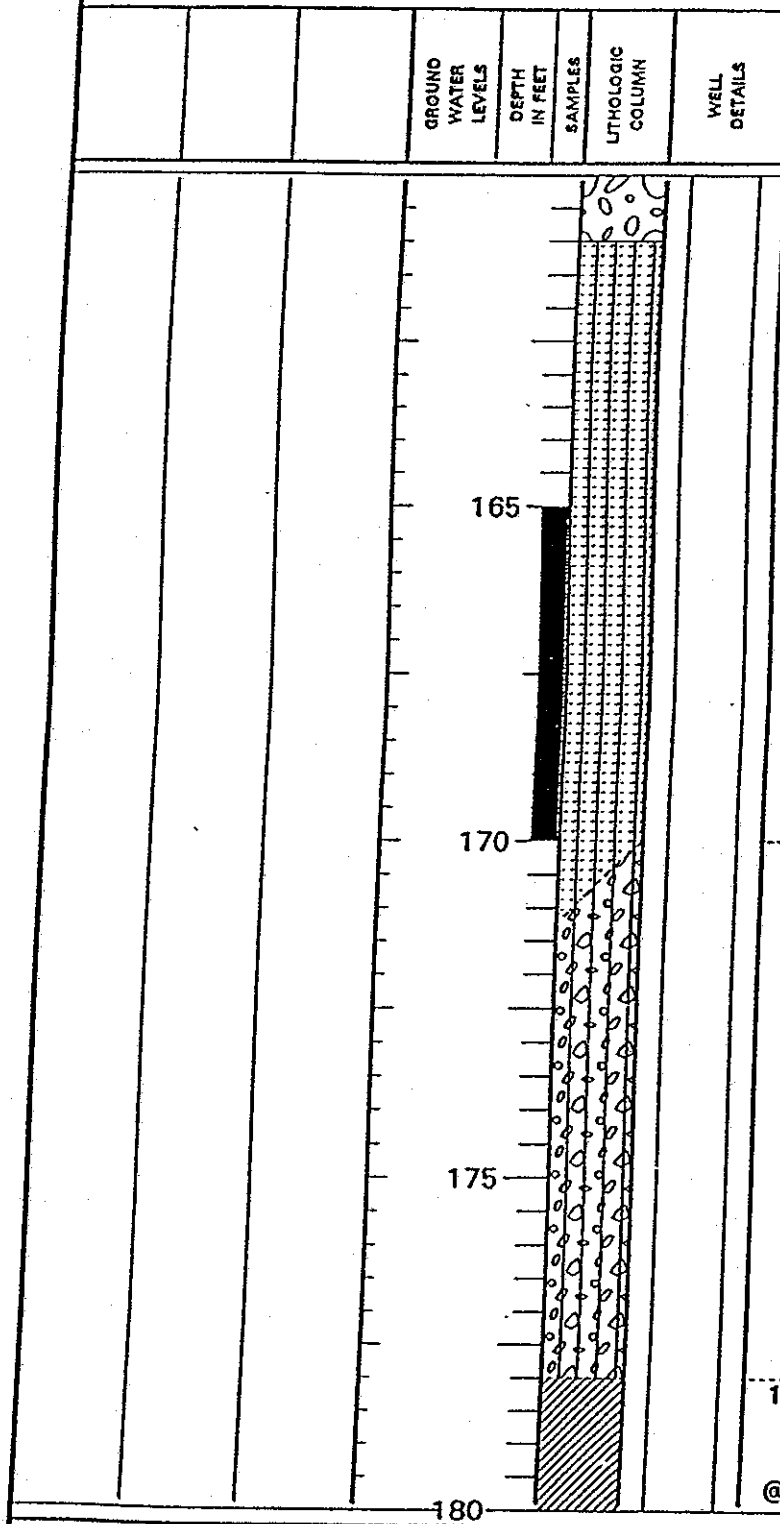

LITHOLOGIC DESCRIPTION

160.0 to 161.0 feet: BOULDER
@ 160.0 feet: hard drilling.

161.0 to 170.0 feet: SILTY SAND WITH GRAVEL (SW-SM), gray, well-graded sand, little fine to medium gravel, some fines, damp.

@ 163.0 feet: BOULDER.

170.0 to 178.0 feet: SILTY GRAVEL (GM), gray, fine gravel, some fines, few well-graded sand. (UNIT C1?)
@ 170.0 feet: adding water.

178.0 to 195.0 feet: SANDY CLAY (CL), gray, few fine to medium sand, trace fine gravel, stiff. (UNIT A/B?)
@ 178.0 feet: added drilling foam "Versafoam"

REMARKS

LOG OF EXPLORATORY BORING

PROJECT NAME	Vicwood Development	BORING NO.	MW- 1
LOCATION		PAGE	10 OF 11
DRILLED BY	B and C Well Drilling	GROUND ELEV.	450.00'
DRILL METHOD	Air Rotary	TOTAL DEPTH	217.00'
LOGGED BY	Sharon Burkett	DATE COMPLETED	09/20/94

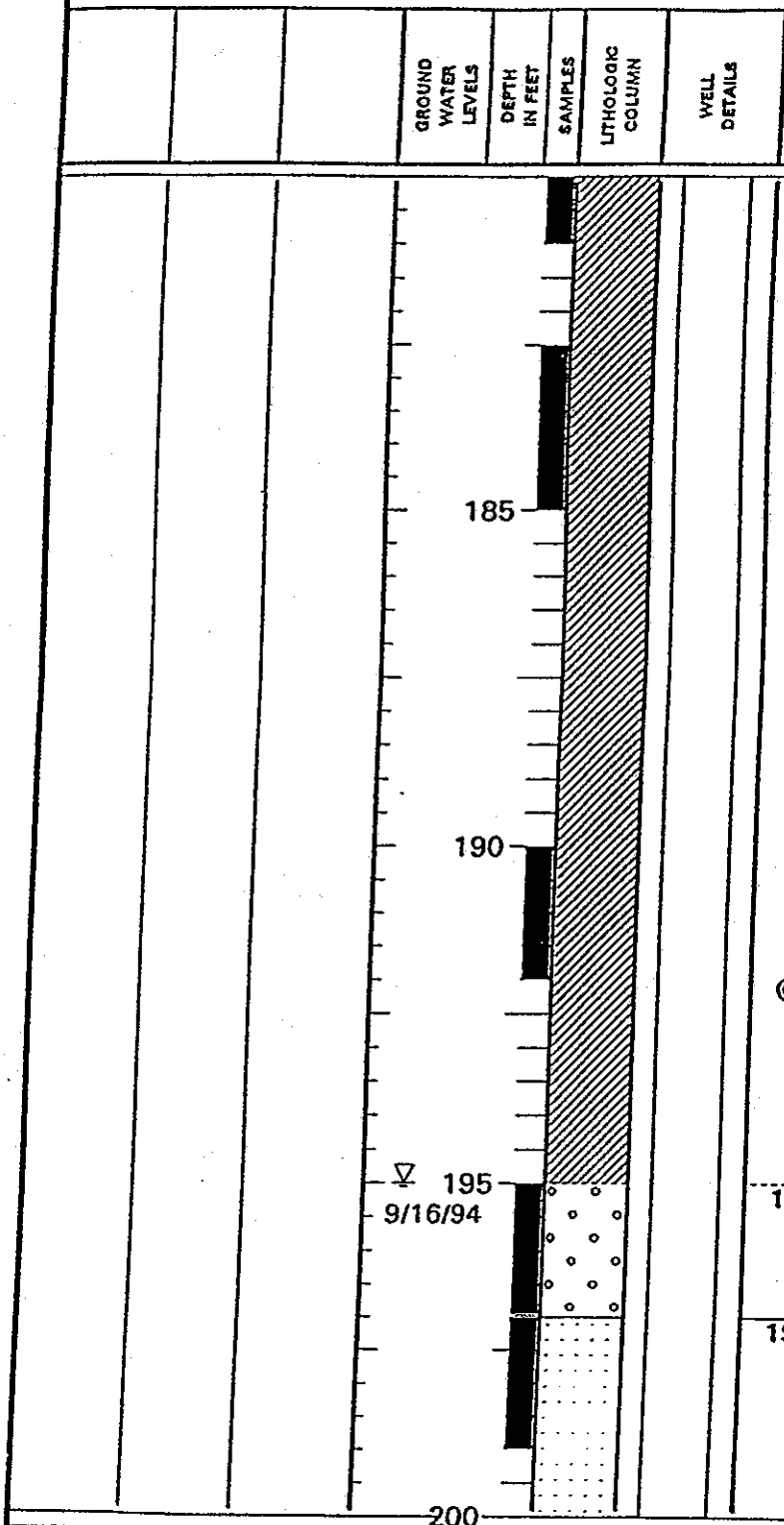

LITHOLOGIC DESCRIPTION

178.0 to 195.0 feet: SANDY CLAY (CL), gray, few fine to medium sand, trace fine gravel, stiff. (UNIT A/B?)

@ 192.0 feet: color change to light brown. Increased gravel.

195.0 to 197.0 feet: SANDY GRAVEL (GP), fine to medium subrounded gravel, few to little well-graded sand, wet.

197.0 to 217.0 feet: SAND (SP), light brown, fine sand, trace medium to coarse sand, trace fine gravel.

REMARKS

LOG OF EXPLORATORY BORING

PROJECT NAME Vicwood Development
LOCATION
DRILLED BY B and C Well Drilling
DRILL METHOD Air Rotary
LOGGED BY Sharon Burkett

BORING NO. MW-
PAGE 11 of
GROUND ELEV. 450.00'
TOTAL DEPTH 217.00'
DATE COMPLETED 09/20/94

GROUND WATER LEVELS	DEPTH IN FEET	SAMPLES	LITHOLOGIC COLUMN	WELL DETAILS	LITHOLOGIC DESCRIPTION
	205				197.0 to 217.0 feet: SAND (SP), light brown, fine sand, trace medium to coarse sand, trace fine gravel.
	210				@ 210.0 feet: fine to medium sand, color change to gray brown.
	215				Bottom of boring at 217.0 feet.
	220				

WELL COMPLETION DETAILS:
0 to 209.0 feet: 6-inch-diameter, steel well casing.
208.5 to 209.0 feet: 5-inch-diameter, steel casing with rubber gasket packer.
209.0 to 214.0 feet: 5-inch-diameter, stainless steel wire-wrapped well screen with 0.010-inch slots.
214.0 to 214.5 feet: 5-inch-diameter steel end plug.

0 to 18.0 feet: Bentonite chips hydrated with potable water.

REMARKS

EMCON Northwest, Inc.

Emcon 2/8/95

LOG OF EXPLORATORY BORING

PROJECT NAME	Keeting & Sons	BORING NO.	MW- 2
LOCATION	Blaine, Washington	PAGE	1 OF 20
DRILLED BY	B & C Drilling	GROUND ELEV.	490
DRILL METHOD	6-inch Air Rotary	TOTAL DEPTH	397.00'
LOGGED BY	G. S. Mack	DATE COMPLETED	10/30/94

GROUND WATER LEVELS	DEPTH IN FEET	SAMPLES	LITHOLOGIC COLUMN	WELL DETAILS	LITHOLOGIC DESCRIPTION
	5				0 to 17.0 feet: SILTY SAND (SP), yellowish brown, fine sand, little nonplastic fines.
	10				
	15				
	20				17.0 to 22.0 feet: SANDY SILT (ML), yellowish brown, nonplastic fines, low toughness, slow to none dilatency, little fine sand, moist.

REMARKS

LOG OF EXPLORATORY BORING

PROJECT NAME	Keeting & Sons	BORING NO.	MW-2
LOCATION	Blaine, Washington	PAGE	2 of
DRILLED BY	B & C Drilling	GROUND ELEV.	
DRILL METHOD	6-inch Air Rotary	TOTAL DEPTH	397.00'
LOGGED BY	G. S. Mack	DATE COMPLETED	10/30/94

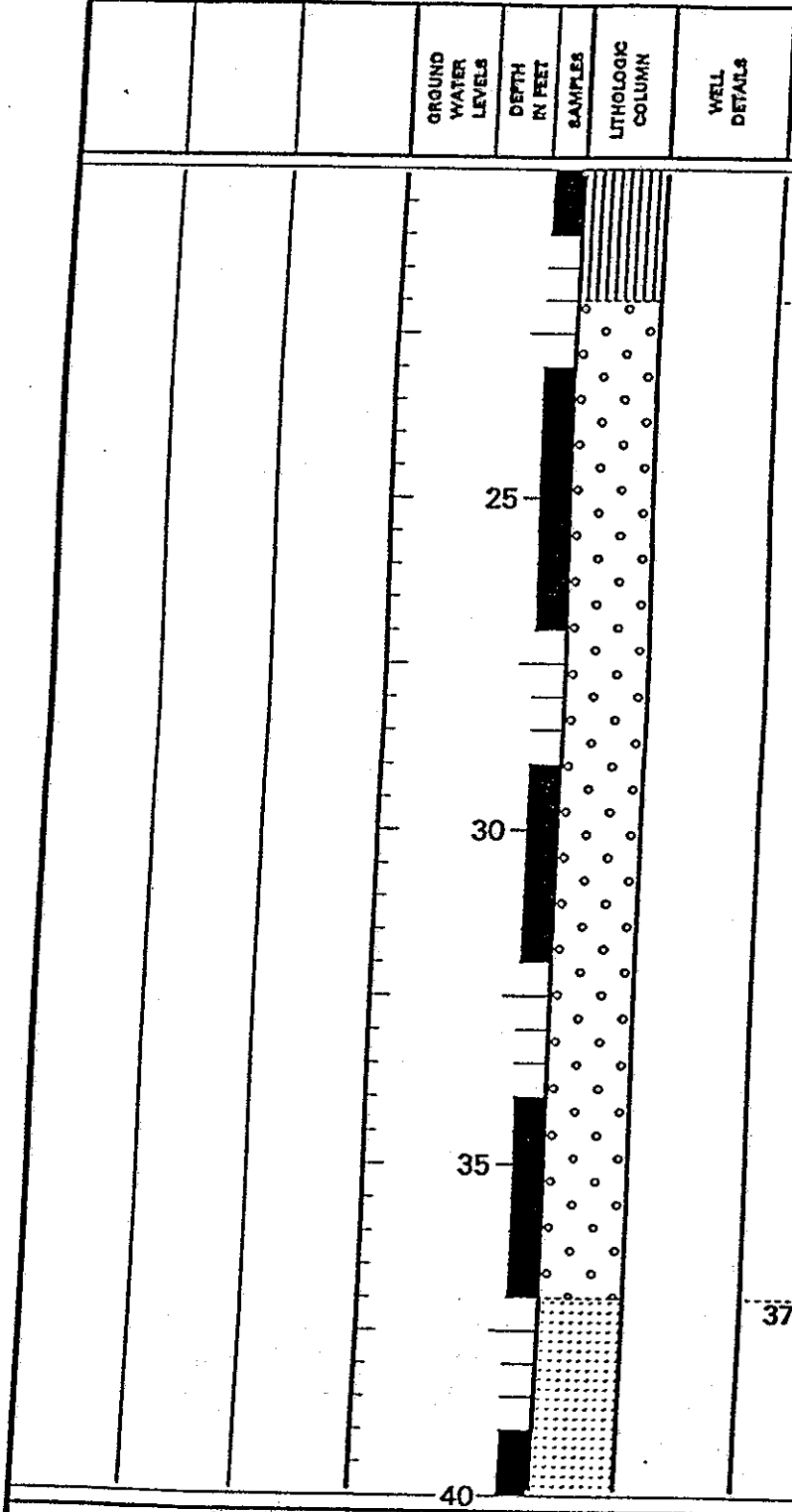

LITHOLOGIC DESCRIPTION

17.0 to 22.0 feet: SANDY SILT (ML), continued.

22.0 to 37.0 feet: SILTY GRAVEL WITH SAND (GP), yellowish brown, fine to coarse gravel, little nonplastic fines, little sand, moist.

37.0 to 62.0 feet: SILTY SAND WITH GRAVEL (SW), olive green, fine to coarse sand, little fine to coarse gravel, little nonplastic fines, moist.

REMARKS

LOG OF EXPLORATORY BORING

PROJECT NAME	Keeting & Sons	BORING NO.	MW- 2
LOCATION	Blaine, Washington	PAGE	3 OF 20
DRILLED BY	B & C Drilling	GROUND ELEV.	
DRILL METHOD	6-inch Air Rotary	TOTAL DEPTH	397.00'
LOGGED BY	G. S. Mack	DATE COMPLETED	10/30/94

GROUND WATER LEVELS	DEPTH IN FEET	SAMPLES	LITHOLOGIC COLUMN	WELL DETAILS	LITHOLOGIC DESCRIPTION
	45				27.0 to 62.0 feet: SILTY SAND WITH GRAVEL (SW), continued.
	50				
	55				
	60				

REMARKS

LOG OF EXPLORATORY BORING

PROJECT NAME Keeting & Sons
LOCATION Blaine, Washington
DRILLED BY B & C Drilling
DRILL METHOD 6-inch Air Rotary
LOGGED BY G. S. Mack

BORING NO. MW-2
PAGE 4 OF 20
GROUND ELEV.
TOTAL DEPTH 397.00'
DATE COMPLETED 10/30/94

GROUND WATER LEVELS	DEPTH IN FEET	SAMPLES	LITHOLOGIC COLUMN	WELL DETAILS	LITHOLOGIC DESCRIPTION
	65				27.0 to 62.0 feet: SILTY SAND WITH GRAVEL (SW), continued.
	70				62.0 to 87.0 feet: SANDY GRAVEL WITH SILT (GW), olive gray, fine to coarse subangular to subrounded gravel, little fine sand, few fines, moist.
	75				
	80				

REMARKS

LOG OF EXPLORATORY BORING

PROJECT NAME	Keeting & Sons	BORING NO.	MW- 2
LOCATION	Blaine, Washington	PAGE	5 OF 20
DRILLED BY	B & C Drilling	GROUND ELEV.	
DRILL METHOD	6-inch Air Rotary	TOTAL DEPTH	397.00'
LOGGED BY	G. S. Mack	DATE COMPLETED	10/30/94

GROUND WATER LEVELS	DEPTH IN FEET	SAMPLES	LITHOLOGIC COLUMN	WELL DETAILS	LITHOLOGIC DESCRIPTION
	85				62.0 to 87.0 feet: SANDY GRAVEL WITH SILT (GW), continued.
	90				87.0 to 105.0 feet: GRAVELLY SAND (SP), olive gray, predominantly fine sand with trace of medium to coarse sand, trace of gravel, trace of fines, moist.
	95				
	100				

REMARKS

LOG OF EXPLORATORY BORING

PROJECT NAME	Keeting & Sons	BORING NO.	MW-3
LOCATION	Blaine, Washington	PAGE	6 OF 6
DRILLED BY	B & C Drilling	GROUND ELEV.	
DRILL METHOD	6-inch Air Rotary	TOTAL DEPTH	397.00'
LOGGED BY	G. S. Mack	DATE COMPLETED	10/30/94

GROUND WATER LEVELS	DEPTH IN FEET	SAMPLES	LITHOLOGIC COLUMN	WELL DETAILS	LITHOLOGIC DESCRIPTION
	105				87.0 to 105.0 feet: GRAVELLY SAND (SP), continued.
	110				105.0 to 124.0 feet: SAND (SP), yellowish brown to olive gray, fine sand, trace of fines, moist.
	115				
	120				

REMARKS

LOG OF EXPLORATORY BORING

PROJECT NAME	Keeting & Sons	BORING NO.	MW-2
LOCATION	Blaine, Washington	PAGE	7 OF 20
DRILLED BY	B & C Drilling	GROUND ELEV.	
DRILL METHOD	6-inch Air Rotary	TOTAL DEPTH	397.00'
LOGGED BY	G. S. Mack	DATE COMPLETED	10/30/94

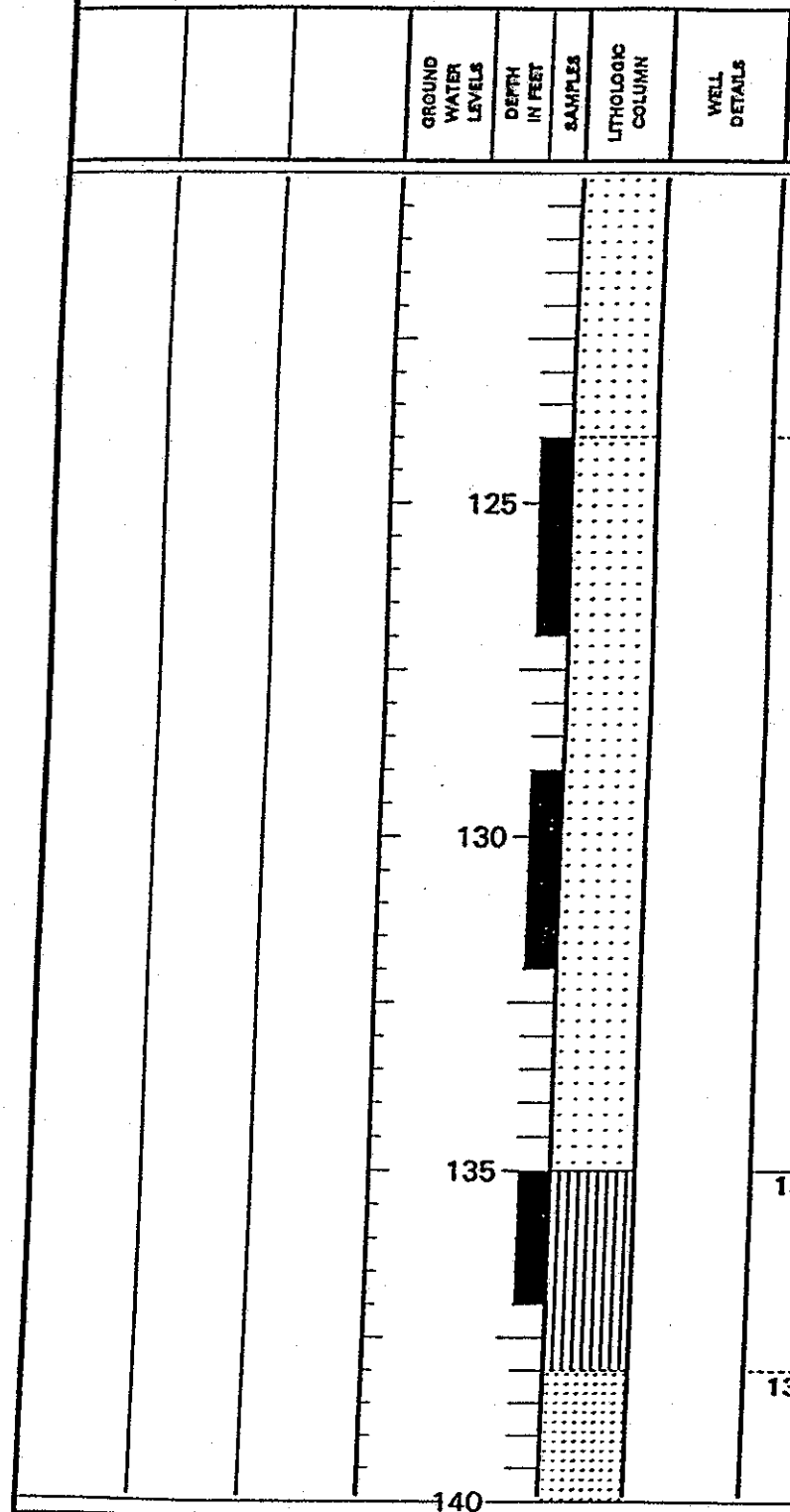

LITHOLOGIC DESCRIPTION

105.0 to 124.0 feet: SAND (SP), continued.

124.0 to 135.0 feet: GRAVELLY SAND (SP), light olive gray, predominantly fine sand with medium to coarse, little subangular to subrounded hard gravel up to 3/4-inch, trace of fines, moist.

135.0 to 138.0 feet SILT WITH SAND (ML), light olive gray, low to nonplastic fines, low toughness, slow dilatory, little fine to coarse sand, trace of fine gravel, moist.

138.0 to 143.0 feet: SILTY SAND WITH GRAVEL (SW), light olive gray, fine to coarse sand, little fine gravel.

REMARKS

LOG OF EXPLORATORY BORING

PROJECT NAME	Keeting & Sons	BORING NO.	MW- 2
LOCATION	Blaine, Washington	PAGE	8 of 10
DRILLED BY	B & C Drilling	GROUND ELEV.	
DRILL METHOD	6-inch Air Rotary	TOTAL DEPTH	397.00'
LOGGED BY	G. S. Mack	DATE COMPLETED	10/30/94

GROUND WATER LEVELS	DEPTH IN FEET	SAMPLES	LITHOLOGIC COLUMN	WELL DETAILS	LITHOLOGIC DESCRIPTION
	145				138.0 to 143.0 feet: SILTY SAND WITH GRAVEL (SW), continued.
	150				143.0 to 156.0 feet: SANDY GRAVEL (GP), olive gray, fine subrounded gravel, some predominantly fine sand with medium to coarse, trace of fines, moist.
	155				156.0 to 186.0 feet: GRAVELLY SAND (SP), light olive gray to light gray, predominantly fine sand with few medium to coarse, little fine gravel, trace of fines, moist.
	160				

REMARKS

LOG OF EXPLORATORY BORING

PROJECT NAME Keeting & Sons
LOCATION Blaine, Washington
DRILLED BY B & C Drilling
DRILL METHOD 6-inch Air Rotary
LOGGED BY G. S. Mack

BORING NO. MW-2
PAGE 9 of 20
GROUND ELEV.
TOTAL DEPTH 397.00'
DATE COMPLETED 10/30/94

GROUND WATER LEVELS	DEPTH IN FEET	SAMPLES	LITHOLOGIC COLUMN	WELL DETAILS	LITHOLOGIC DESCRIPTION
	165				156.0 to 186.0 feet: GRAVELLY SAND (SP), continued.
	170				
	175				
	180				

REMARKS

LOG OF EXPLORATORY BORING

PROJECT NAME	Keeting & Sons	BORING NO.	MW- 2
LOCATION	Blaine, Washington	PAGE	10 OF 20
DRILLED BY	B & C Drilling	GROUND ELEV.	
DRILL METHOD	6-inch Air Rotary	TOTAL DEPTH	397.00'
LOGGED BY	G. S. Mack	DATE COMPLETED	10/30/94

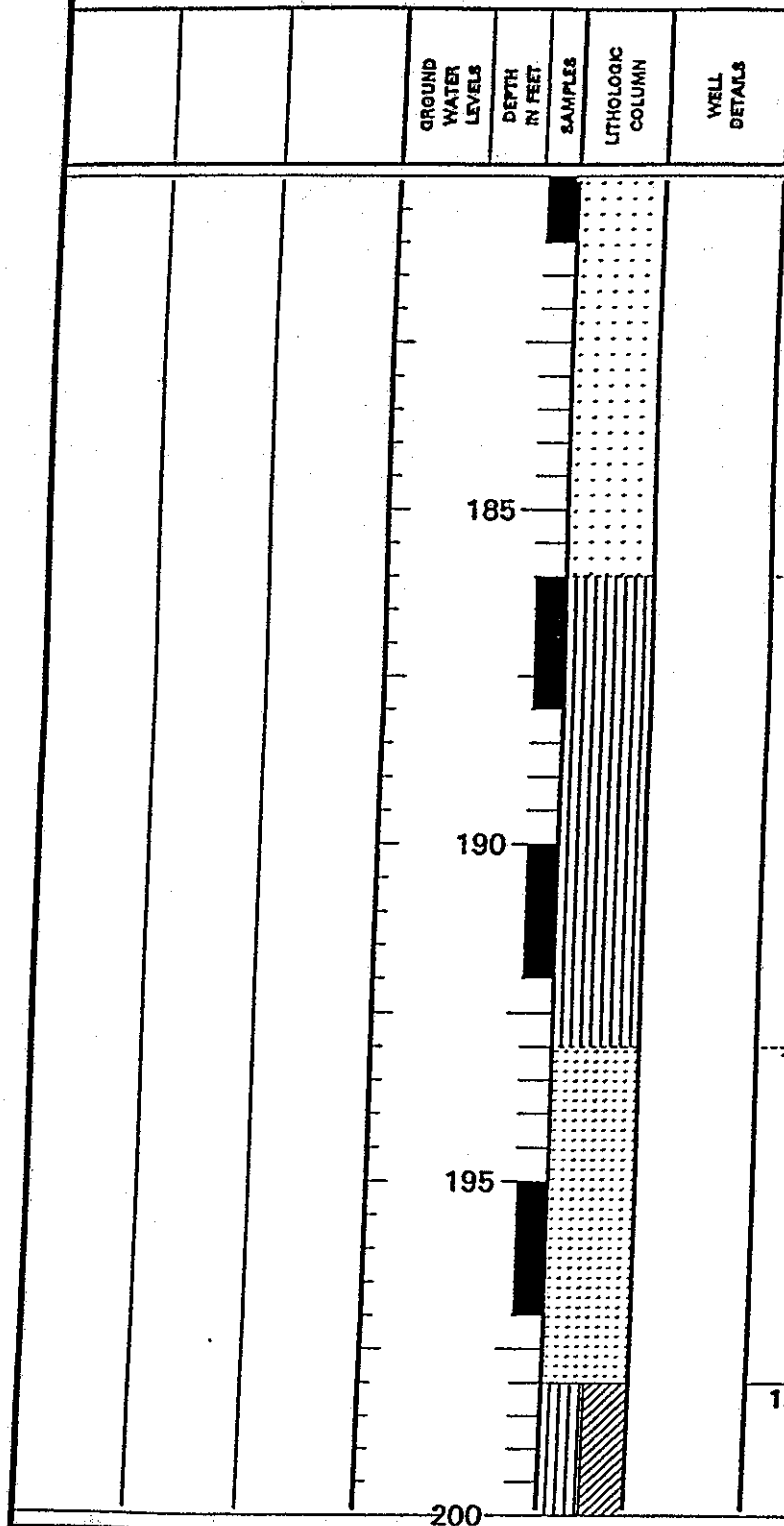

LITHOLOGIC DESCRIPTION

156.0 to 186.0 feet: GRAVELLY SAND (SP), continued.

186.0 to 193.0 feet: SILT WITH SAND (ML), light olive gray, nonplastic, low to toughness, rapid dilatency silt, little fine sand, trace of gravel, moist.

193.0 to 198.0 feet: GRAVELLY SAND WITH SILT (SW), olive gray, fine to coarse sand, some fine gravel, few fines, moist.

198.0 to 203.0 feet: CLAYEY SILT WITH SAND (ML/CL), light olive gray, nonplastic fines, low toughness, rapid dilatency, medium to high dry strength, little fine sand, wet.

REMARKS

LOG OF EXPLORATORY BORING

PROJECT NAME Keeting & Sons
LOCATION Blaine, Washington
DRILLED BY B & C Drilling
DRILL METHOD 6-inch Air Rotary
LOGGED BY G. S. Mack

BORING NO. MW-
PAGE 11 C
GROUND ELEV.
TOTAL DEPTH 397.00'
DATE COMPLETED 10/30/94

GROUND WATER LEVELS	DEPTH IN FEET	SAMPLES	LITHOLOGIC COLUMN	WELL DETAILS	LITHOLOGIC DESCRIPTION
	205				198.0 to 203.0 feet: CLAYEY SILT WITH SAND (ML/CL), continued. @ 200.0 feet: first water out of hole.
	210				203.0 to 220.0 feet: SANDY GRAVEL (GW), light olive gray to yellowish brown, fine to coarse subangular to subrounded gravel, little to some fine to coarse sand, water bearing.
	215				
	220				

REMARKS

LOG OF EXPLORATORY BORING

PROJECT NAME	Keeting & Sons	BORING NO.	MW- 2
LOCATION	Blaine, Washington	PAGE	12 OF 20
DRILLED BY	B & C Drilling	GROUND ELEV.	
DRILL METHOD	6-inch Air Rotary	TOTAL DEPTH	397.00'
LOGGED BY	G. S. Mack	DATE COMPLETED	10/30/94

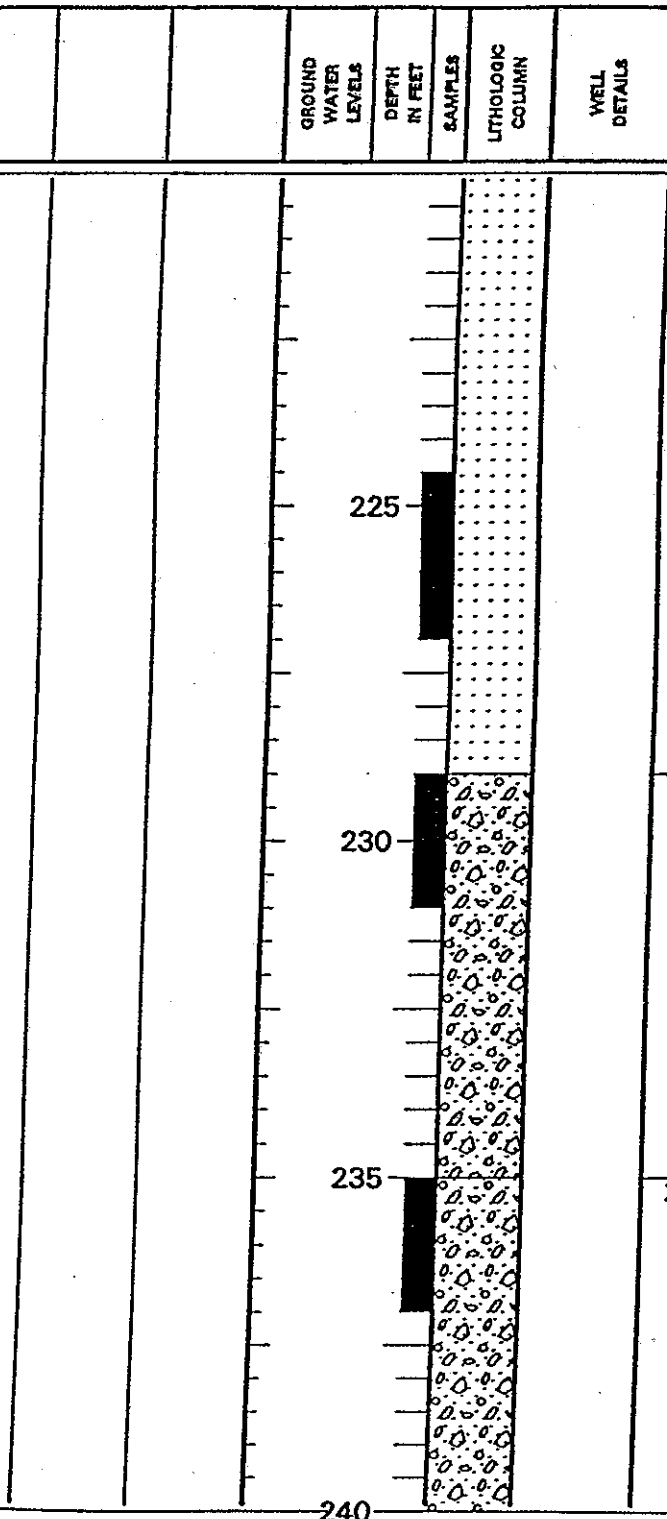

LITHOLOGIC DESCRIPTION

220.0 to 235.0 feet: SILTY SAND (SP), olive gray, fine sand, some nonplastic fines, trace of gravel to 1/4-inch, wet.

229.0 to 235.0 feet: SILTY SAND WITH GRAVEL (GW), olive gray to medium gray, fine to coarse sand, some nonplastic fines, little fine gravel to 1/4-inch, wet.

235.0 to 246.0 feet: SANDY GRAVEL (GW), light olive gray, fine to coarse subangular to subrounded hard gravel, some fine to coarse sand, gravel up to 1 1/2-inch, wet.

REMARKS

LOG OF EXPLORATORY BORING

PROJECT NAME	Keeting & Sons	BORING NO.	MW- 2
LOCATION	Blaine, Washington	PAGE	13 [illegible]20
DRILLED BY	B & C Drilling	GROUND ELEV.	
DRILL METHOD	6-inch Air Rotary	TOTAL DEPTH	397.00'
LOGGED BY	G. S. Mack	DATE COMPLETED	10/30/94

GROUND WATER LEVELS	DEPTH IN FEET	SAMPLES	LITHOLOGIC COLUMN	WELL DETAILS	LITHOLOGIC DESCRIPTION
	245				235.0 to 246.0 feet: SANDY GRAVEL (GW), continued. @ 241.0 feet: low returns.
	250				246.0 to 333.0 feet: FAT TO LEAN CLAY WITH SAND (CL/CH), dark greenish gray, none dilatency, medium toughness, high to very high dry strength, little fine sand, wet, drilling with foam, trace of gravel occurring in layers.
	255				@ 254.0 feet: low returns.
	260				

REMARKS

LOG OF EXPLORATORY BORING

PROJECT NAME	Keeting & Sons	BORING NO.	MW-2
LOCATION	Blaine, Washington	PAGE	14 OF 20
DRILLED BY	B & C Drilling	GROUND ELEV.	
DRILL METHOD	6-inch Air Rotary	TOTAL DEPTH	397.00'
LOGGED BY	G. S. Mack	DATE COMPLETED	10/30/94

GROUND WATER LEVELS	DEPTH IN FEET	SAMPLES	LITHOLOGIC COLUMN	WELL DETAILS	LITHOLOGIC DESCRIPTION
	265				246.0 to 333.0 feet: FAT TO LEAN CLAY WITH SAND (CL/CH), continued.
					@ 261.0 feet: drilling with foam.
	270				
	275				
	280				

REMARKS

LOG OF EXPLORATORY BORING

PROJECT NAME	Keeting & Sons	BORING NO.	MW-2
LOCATION	Blaine, Washington	PAGE	15
DRILLED BY	B & C Drilling	GROUND ELEV.	
DRILL METHOD	6-inch Air Rotary	TOTAL DEPTH	397.00'
LOGGED BY	G. S. Mack	DATE COMPLETED	10/30/94

GROUND WATER LEVELS	DEPTH IN FEET	SAMPLES	LITHOLOGIC COLUMN	WELL DETAILS	LITHOLOGIC DESCRIPTION
	285				246.0 to 333.0 feet: FAT TO LEAN CLAY WITH SAND (CL/CH), continued.
					@ 280.0 feet: water accumulated in hole over night.
					@ 283.0 feet: no returns.
	290				@ 287.0 feet: trace of gravel, making little water.
	295				
	300				

REMARKS

LOG OF EXPLORATORY BORING

PROJECT NAME	Keeting & Sons	BORING NO.	MW- 2
LOCATION	Blaine, Washington	PAGE	16 OF 20
DRILLED BY	B & C Drilling	GROUND ELEV.	
DRILL METHOD	6-inch Air Rotary	TOTAL DEPTH	397.00'
LOGGED BY	G. S. Mack	DATE COMPLETED	10/30/94

GROUND WATER LEVELS	DEPTH IN FEET	SAMPLES	LITHOLOGIC COLUMN	WELL DETAILS	LITHOLOGIC DESCRIPTION
	305				246.0 to 333.0 feet: FAT TO LEAN CLAY WITH SAND (CL/CH), continued. @ 301.0 feet: little returns. @ 302.0 feet: adding water. @ 305.0 feet: making little water.
	310				@ 310.0 feet: adding foam, small shards of shale.
	315				@ 314.0 feet: small shards of shale.
	320				

REMARKS

LOG OF EXPLORATORY BORING

PROJECT NAME	Keeting & Sons	BORING NO.	MW
LOCATION	Blaine, Washington	PAGE	17
DRILLED BY	B & C Drilling	GROUND ELEV.	
DRILL METHOD	6-inch Air Rotary	TOTAL DEPTH	397.00'
LOGGED BY	G. S. Mack	DATE COMPLETED	10/30/94

GROUND WATER LEVELS	DEPTH IN FEET	SAMPLES	LITHOLOGIC COLUMN	WELL DETAILS	LITHOLOGIC DESCRIPTION
	325				246.0 to 333.0 feet: FAT TO LEAN CLAY WITH SAND (CL/CH), continued.
	330				
	335				333.0 to 353.0 feet: SAND (SP), medium gray to dark olive gray, fine sand, trace of medium to coarse sand, trace of gravel to 1/2-inch, wet.
	340				

REMARKS

LOG OF EXPLORATORY BORING

PROJECT NAME Keeting & Sons
LOCATION Blaine, Washington
DRILLED BY B & C Drilling
DRILL METHOD 6-inch Air Rotary
LOGGED BY G. S. Mack

BORING NO. MW- 2
PAGE 18 OF 20
GROUND ELEV.
TOTAL DEPTH 397.00'
DATE COMPLETED 10/30/94

GROUND WATER LEVELS	DEPTH IN FEET	SAMPLES	LITHOLOGIC COLUMN	WELL DETAILS	LITHOLOGIC DESCRIPTION
	345				333.0 to 353.0 feet: SAND (SP), continued.
	350				
	355				353.0 to 355.0 feet: SILTY SAND (SP), medium gray, fine sand, few medium and coarse sand, trace of gravel, nonplastic fines, wet.
	360				359.0 to 363.0 feet: SAND (SP), medium gray, fine sand; description continued on next page.

REMARKS

LOG OF EXPLORATORY BORING

PROJECT NAME Keeting & Sons
LOCATION Blaine, Washington
DRILLED BY B & C Drilling
DRILL METHOD 6-inch Air Rotary
LOGGED BY G. S. Mack

BORING NO. MW- 2
PAGE 19 0
GROUND ELEV.
TOTAL DEPTH 397.00'
DATE COMPLETED 10/30/94

GROUND WATER LEVELS	DEPTH IN FEET	SAMPLES	LITHOLOGIC COLUMN	WELL DETAILS	LITHOLOGIC DESCRIPTION
					359.0 to 363.0 feet: SAND (SP), continued: trace of medium to coarse, trace of gravel, trace of fines, wet, gravel to 1-inch.
	365				363.0 to 397.0 feet: SILTY CLAY (ML/CL), medium gray, none dilatency, medium to high plasticity, medium toughness, very high dry strength, few fine to coarse sand, trace of gravel in layers, wet.
	370				
	375				
	380				

REMARKS

LOG OF EXPLORATORY BORING

PROJECT NAME	Keeting & Sons	BORING NO.	MW- 2
LOCATION	Blaine, Washington	PAGE	20 OF 20
DRILLED BY	B & C Drilling	GROUND ELEV.	
DRILL METHOD	6-inch Air Rotary	TOTAL DEPTH	397.00'
LOGGED BY	G. S. Mack	DATE COMPLETED	10/30/94

GROUND WATER LEVELS	DEPTH IN FEET	SAMPLES	LITHOLOGIC COLUMN	WELL DETAILS	LITHOLOGIC DESCRIPTION
	385				363.0 to 397.0 feet: SILTY CLAY (ML/CL), continued.
	390				
	395				Total depth drilled = 397.0 feet. Total depth sampled = 377.0 feet.
	400				

REMARKS

SECTION 3

WATER SYSTEMS

3.0 WATER SYSTEM ASSET SUMMARY

The backbone elements for the water system are illustrated in Figure 1.3. These are the Subarea's shared-cost public assets for the water system and it is anticipated that the funding will be derived in whole or in part from impact fees assessed during the plat process. Other options include creation of a ULID/LID or construction by a developer through a Public Facilities Construction Agreement (PFCA) with the City as depicted on Table 1.1. An order-of-magnitude estimate of the water system infrastructure costs results in a fee of $3,200/DU for the water backbone infrastructure.

3.1 BACKGROUND

Water supply for the Subarea will ultimately come from the City's existing source wells, future source wells, and upgrades to the City's existing system in conjunction with construction of the proposed infrastructure. The estimated water demands of the Subarea are based upon calculations performed for previous studies and as presented in the City's comprehensive planning documents. These estimated demands provide the basis for preliminary sizing of infrastructure that will meet the build-out demands of the area. However, the rate of development within the Subarea will ultimately drive the initial sizing of some infrastructure components and the phasing of others.

Draft

3.2 ALTERNATIVES CONSIDERED

The following water system alternatives were initially identified and considered in the development of this plan:

Traditional: New water system infrastructure and pressure zones to serve the Subarea as defined by previous water plans and studies. New water system infrastructure to serve the Subarea would be integrated with existing City water supply, storage, and conveyance facilities.

Downsized: An alternative approach is associated with decentralized sewer treatment and effluent reuse as defined in Section 4. This concept was based on using reclaimed water for landscaping irrigation, thus significantly reducing potable water demands. The pressure zones and water infrastructure would be similar to the "traditional" system above except that some components would be smaller in size.

Based on a "screening" of the alternatives (during a 3/15/06 meeting), a decision was made not to pursue decentralized wastewater treatment and effluent reuse in the Subarea at this time. Consequently, this "downsized" alternative was eliminated from further consideration and the "traditional" system was selected as the preferred approach for the water system improvements.

3.3 WATER SYSTEM PLANNING APPROACH

The key aspects of master planning for water service within the Subarea are related to establishing appropriate pressure zones and to determine the basic infrastructure that would be required to support water service within these zones. Specific items include the backbone of the distribution system, booster pump stations, and storage facilities. In addition, the capabilities of the existing system must also be analyzed and addressed.

Ultimate sizing of facilities will depend upon factors such as demand forecasts at the time of design and the final location chosen for proposed facilities. These facilities would include connections to the existing system and booster pump stations. For the Subarea, booster stations and connections to the existing system will generally go hand-in-hand and their location may depend on the City's success in procuring land as well as decisions regarding the operational procedures of existing downstream facilities.

The backbone of the distribution system will be a network of pipelines that provide service to the entire Subarea from larger distribution mains extending easterly through the Subarea. These mains will be sized to meet the ultimate demand of the area including fire flow conditions.

At a minimum, a booster station and a storage standpipe will ultimately be required to supply the upper pressure zone (upper zone). Understanding system demands is crucial in sizing these facilities and, although preliminary sizes are provided in this plan, system demands at the time of design must be evaluated to ensure that each facility is adequately sized.

DRAFT

For this plan, an average daily demand (ADD) of 180 gallons per day per DU has been used for preliminary sizing. Maximum daily demand (MDD) has been set at a ratio of 2.0, thus 360 gallons per day per DU. These figures represent conservative values based on figures presented in previous plans and a review of actual average residential usage within the City over the past four years. Assumed density for build-out is 3.27 units per acre.

Peak hour demands were calculated using the Department of Health (DOH) Equation 5-3 in the DOH *Water System Design Manual*, April 2001. Fire flow demands have been planned at 750 gallons-per-minute (gpm) for a duration of 1 hour. This figure is derived from documents associated with the most recent comprehensive planning.

3.4 PLANNING BASIS

Factors considered in the planning of the water system for the Subarea are summarized as follows.

- Limitations associated with the City's existing water supply.
- Existing and future operational procedures with regard to maintaining specific water levels within the City's storage reservoirs.
- Preliminary planning to date for the East Maple Ridge and Grandis Pond developments.

3.5 EXISTING AND PROPOSED PRESSURE ZONES

The topography of the Subarea ranges from elevation 150 feet to 540 feet. The western portion of the Subarea falls into the existing 440 pressure zone and will be served by it. Approximately two-thirds of the Subarea located at higher elevations will be served by an additional upper zone. See Figure 3.1, which illustrates the Subarea boundary and the City's existing water system infrastructure in the vicinity.

3.5.1 Existing 440 Zone

An existing 1.25 million-gallon water tank near Harvey Road has a high water line of 440 feet and currently provides service to approximately 100 existing residences on the west side of the Subarea. This reservoir is the primary supply for the 440 zone.

Based on a review of the existing properties being served by the 440 zone and the required storage volumes as presented in the City of Blaine's *Draft Water System Plan* (April 1996), the existing 440 zone can provide a minimum service pressure of 30 pounds per square inch (psi) for customers up to an elevation of 355 feet. This assumes that the low-water elevation of the tank is held above an elevation of 425 feet. The 355-foot elevation is an appropriate pressure boundary because the high point of Harvey Road between H Street and the US/Canada border is roughly 353 feet.

As illustrated in Figure 3.2, the eastern limits of the 440 zone can adequately supply development west of Harvey Road. In addition, the zone can also supply a few of the properties just east of the Harvey Road at the southern and northern edges of the Subarea. Therefore, Harvey Road will essentially be the eastern boundary of the revised 440 zone. However, the final layout of the zone line will depend upon the order in which the lots to the east of Harvey Road develop and the timing and positioning of infrastructure constructed for the upper zone. See Section 3.6.4 for more information regarding Harvey Road.

DRAFT

3.5.2 Upper Pressure Zone

Options to provide one or more pressure zones to serve the remainder of the higher-elevation Subarea were reviewed. The City, based on logistics and operations, selected the single pressure zone option for that area between the 440 zone boundary and the eastern edge of the Subarea. Based on a review of the topography throughout the remaining area, the optimum minimum hydraulic gradient elevation for service to the upper zone is 610 feet.

The upper zone would provide a minimum service pressure of 30 psi for customers up to an elevation of 540 feet assuming a minimum reservoir water level of approximately 610 feet. At this low-water elevation, the system pressures along the lower western edge of the upper zone would be upwards from 120 psi. Options for the western portion of the upper zone are discussed elsewhere in this section. See Figure 3.3 for an approximate delineation of the upper zone service area boundary.

To provide storage for the upper zone, a new storage tank is proposed for a high point located within the Grandis Pond development or the high point in the southeast corner of the Subarea. The ground elevation of the new tank would be roughly 540 feet and the tank would be approximately 98 to 111 feet tall depending upon the tank design and the

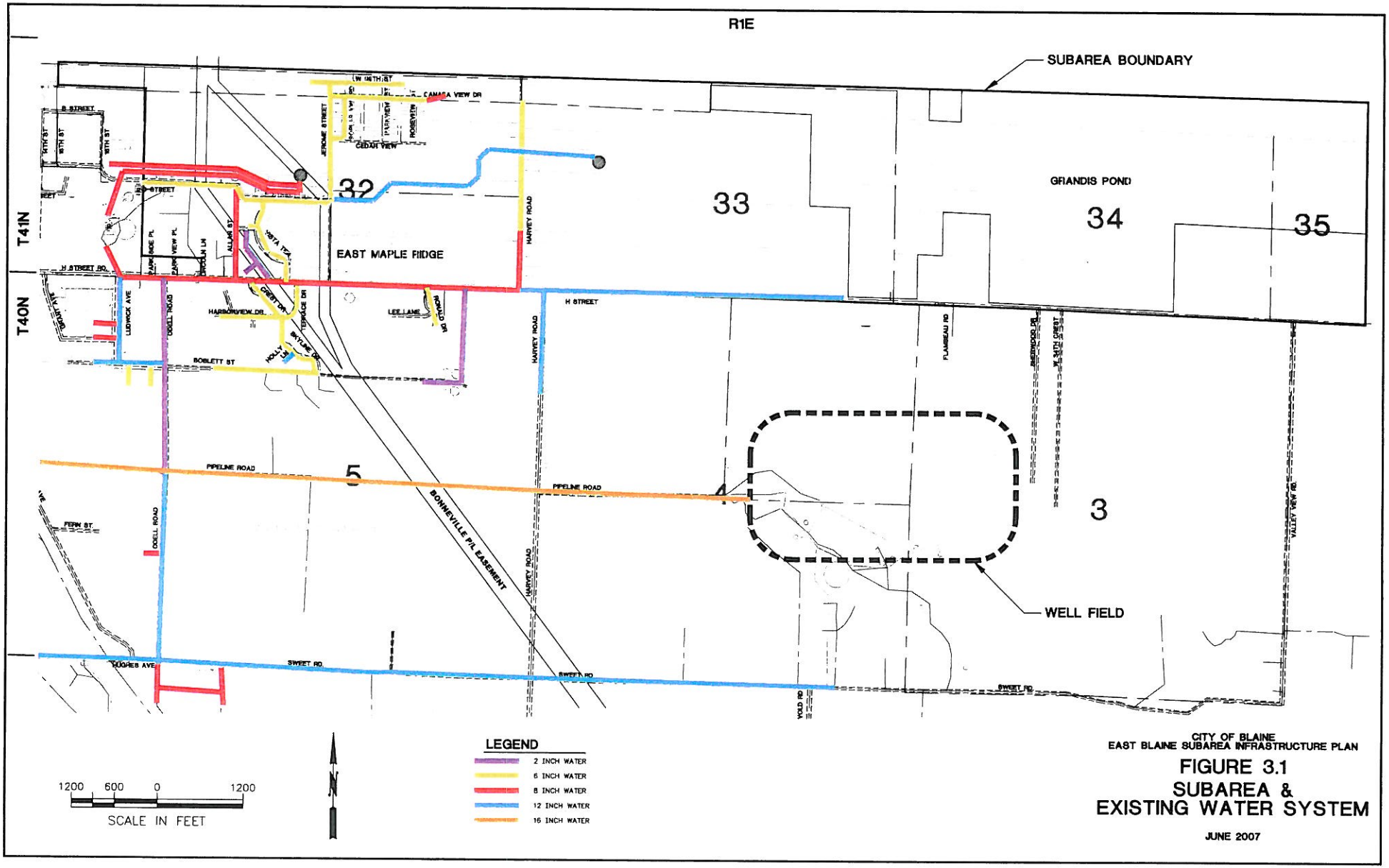

CITY OF BLAINE
EAST BLAINE SUBAREA INFRASTRUCTURE PLAN

FIGURE 3.1
SUBAREA & EXISTING WATER SYSTEM

JUNE 2007

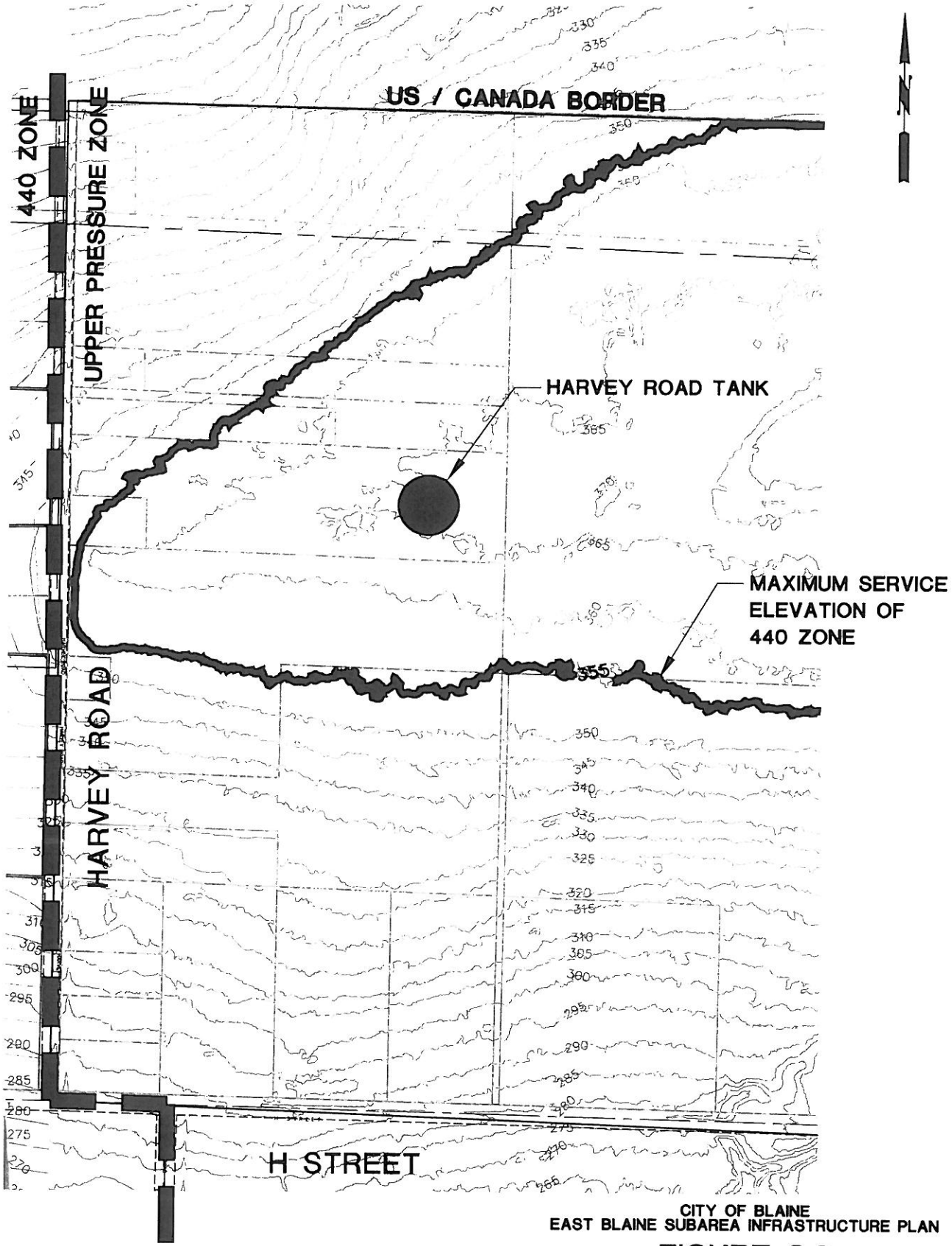

CITY OF BLAINE
EAST BLAINE SUBAREA INFRASTRUCTURE PLAN

FIGURE 3.2
440/UPPER ZONE BOUNDARY

JUNE 2007

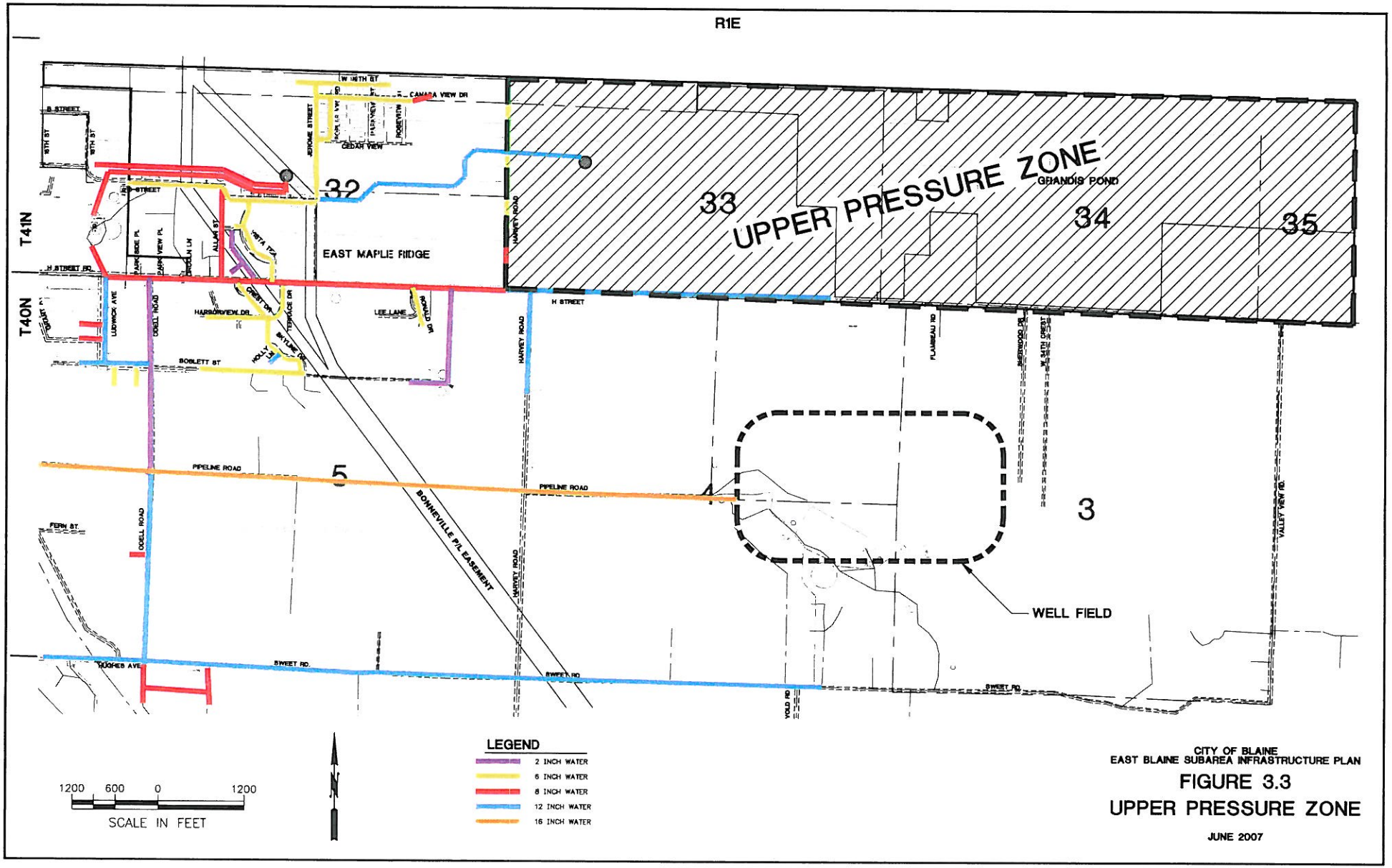

CITY OF BLAINE
EAST BLAINE SUBAREA INFRASTRUCTURE PLAN

FIGURE 3.3
UPPER PRESSURE ZONE

JUNE 2007

required storage volumes. These volumes will differ based on the City's selected operational parameters and the sizing of the future downstream pump station. An alternative to one tall tank would be the construction of multiple shorter tanks at one of these locations; however, the amount of dead storage would greatly increase under this option, so it is not an advised alternative.

3.6 EXISTING WATER SYSTEM INFRASTRUCTURE

For the purposes of evaluation for the Subarea plan, the water system infrastructure has been divided into two categories: existing water system infrastructure that will be utilized by Subarea development and proposed infrastructure that will be required to serve the Subarea.

The City's current source of water is derived from nine wells, including seven that are located in the wellfield south of the Subarea. Two wells that are located outside of the wellfield but near the Subarea are currently inactive and/or non-operational.

The wellfield located south of the Subarea provides a majority of the City's water directly to the 171 zone. This is the City's largest zone and serves the core of the urban area. Water from this zone is drawn and boosted through the 12th Street booster station and the Lincoln Park booster station to feed the 320 zone. The D Street booster station draws water from the 320 zone and pumps it to the 440 zone.

The existing water system infrastructure that will be utilized by development within the Subarea includes:

- 100,000-gallon E Street reservoir.
- 1,250,000-gallon Harvey Road reservoir.
- 8-inch and 12-inch diameter pipelines along H Street.
- 6-inch, 8-inch, and 12-inch diameter pipelines along Harvey Road.
- 6-inch and 12-inch diameter pipeline serving Harvey Road reservoir.
- D Street booster station.
- Existing and new water production wells both inside and external to the wellfield.

Except for the wells and the E Street reservoir, the water system infrastructure elements listed above were generally designed and constructed to serve the 440 zone and are integrated into the overall city water system. The area served by the existing 440 zone, as shown in the City's current comprehensive planning documents, extends just east of the Harvey Road reservoir and along H Street to the end of the existing 12-inch line. This suggests that the existing tank volume and pipeline sizing are more than adequate to serve the smaller 440 zone that is defined by this infrastructure plan.

Based on review of the required storage volumes as presented in the current comprehensive planning documents, the Harvey Road tank appears to have adequate storage to meet the demands of the 440 zone. However, the documentation suggests that any excess volumes in the tank will compensate for storage deficiencies of the lower zones. This plan does not attempt to verify the adequacy of the previously documented storage volume requirements for these lower zone tanks.

Draft

Although the 440 zone is generally assumed to be adequate for future development, the existing distribution system is evaluated below to establish approximate conveyance capacity limitations and to determine the sizing and locations for new pipelines in order to fully integrate the existing and proposed water systems. The following sections describe the existing infrastructure components and the recommended improvements required to meet the demands brought on by the development of the Subarea.

3.6.1 *E Street Reservoir*

The existing E Street reservoir is a 100,000-gallon tank that serves the City's 320 zone. The tank is located on the western edge of the Subarea. According to recent planning documents, the E Street tank currently lacks sufficient storage volume to meet DOH requirements and thus relies upon "surplus" volume in the Harvey Road tank to adequately supply the 320 zone. Previous water plans have recommended replacing the E Street tank with a larger tank (750,000 gallons), which would free up some capacity in the Harvey Road tank. Based on the current size of the E Street reservoir and the information provided, it is presumed that this tank cannot serve any additional connections.

As demands increase within the Subarea, the amount and frequency of water being drawn from the E Street reservoir will increase. Upgrades to the facility to increase the capacity of this tank, as previously recommended, should be considered in order to reduce downstream pump cycles and to increase the available storage of other facilities. In addition, stand-by power must be added to this station to ensure reliability in meeting the demands of the upper zones. These improvements are item W-10 on Table 1.1.

3.6.2 *Harvey Road Reservoir*

The existing Harvey Road reservoir is a 1.25 million-gallon tank that provides gravity service to the 440 zone. The tank is filled by the D Street booster station, which draws water from the E Street reservoir serving the 320 zone. The Harvey Road tank can also provide service back to the lower 320 zone through a pressure-reducing valve (PRV). According to the City's current comprehensive planning documents, the Harvey Road tank maintains a storage surplus for the 320 zone due the current capacity limitations of the E Street tank.

The design criteria originally used for sizing this tank are still considered valid for service within the 440 zone and was not further evaluated.

Several options could be considered for water supply to the proposed upper zone: draw from the 440 zone, pipe directly from the 16-inch transmission main serving the City's 171 zone, or—possibly—construct new wells within the Subarea. Should the water be drawn from the 440 zone, the Harvey Road tank would serve as a control vessel for transferring water from the lower 320 zone through the 440 zone to the upper zone.

At the time of the upper zone booster station design, a more detailed review of the City's existing and projected water demands with respect to required storage volumes will be necessary. At that time, the operational procedures and usable storage volumes for the Harvey Road tank will be determined. Considering the size of the Harvey Road tank, it is

DRAFT

projected that tank volumes will be adequate to serve the needs of the upper zone. However, adequate telemetry controls between the D Street booster station and the tank will be necessary to maintain operational levels within the tank.

3.6.3 *Existing Water Mains along H Street*

The existing distribution system along H Street consists of an 8-inch pipe running from the 320/440 zone PRV station to the intersection of the northern leg of Harvey Road and H Street. At this point, the main becomes a 12-inch pipe that extends approximately 4,500 lineal feet (LF) to the east.

Once the upper zone is put into operation, the section of 12-inch water main extending east of Harvey Road will become the backbone of the distribution system serving the upper zone. (Existing residents served by this water main may require individual PRVs.) The construction of a PRV station will be required to separate the pressure zones at a point relative to the connection to the future booster station serving the upper zone. Should this booster station be constructed adjacent to the Harvey Road tank, the separation of the zones will be in the area of the Harvey Road and H Street intersections, or just east of this point if the line from the booster station travels south through private easements rather than along Harvey Road.

There is the possibility of serving the upper zone directly from the 171 zone via a direct connection to the 16-inch main along Pipeline Road. If this were to occur, it is presumed that a booster station will be constructed along H Street near the 16-inch main. In this case, the separation of the lines and the construction of a PRV station along H Street will be made close to the intersection of the south leg of Harvey Road.

DRAFT

3.6.4 *Water Mains along Harvey Road*

As discussed in Section 3.5.1, the proposed line dividing the 440 zone and the upper zone will be along the northern portion of Harvey Road or just east of the properties fronting the roadway. Properties east of the roadway may be served by either zone depending on the location and elevation of the property. Variables such as the location of the future booster station and the order in which the lots east of Harvey Road are developed will determine the pipeline configuration within Harvey Road north of H Street.

Currently, the pipeline along Harvey Road extending north from H Street is comprised of approximately 850 LF of 8-inch pipe, which then reduces to a 6-inch pipe. The 6-inch pipe extends northward an additional 2,300 LF. The use of this pipeline is important for supplying service from the 440 zone.

As properties along the east side of Harvey Road develop, there will be a need to supply water from the upper zone to properties on the ridge midway between the US/Canada border and H Street. This will most likely require an additional pipeline along Harvey Road to provide this service. However, an additional pipeline depends upon the order of development and the ultimate location of a future booster station. The City may elect to operate dual pipelines or it may choose to provide service along Harvey Road strictly from the upper zone, maintaining proper pressure at each customer's connection with individual PRVs (see Figure 3.4).

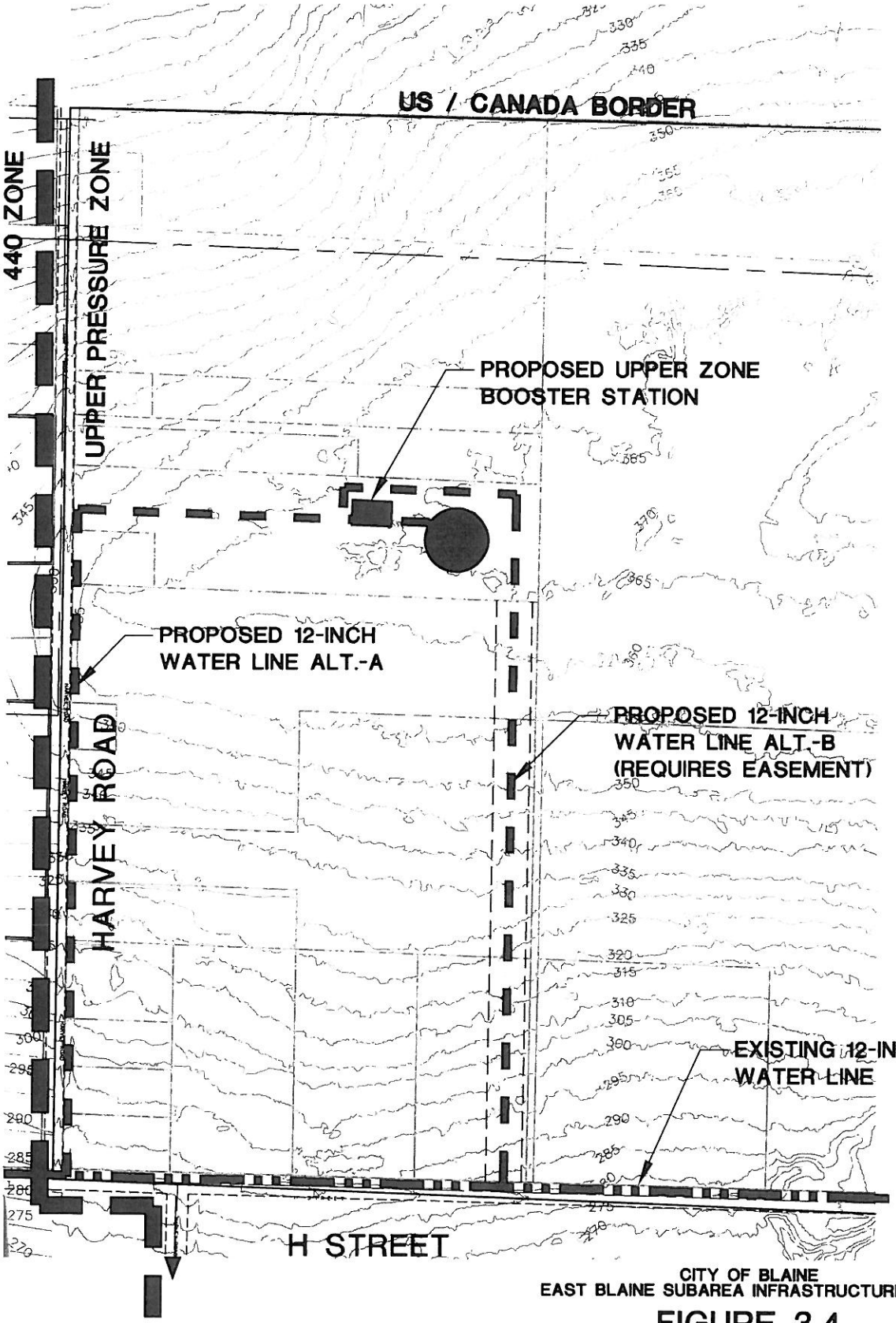

CITY OF BLAINE
EAST BLAINE SUBAREA INFRASTRUCTURE PLAN

FIGURE 3.4
HARVEY ROAD TANK SITE BOOSTER STATION PIPELINE ROUTE ALTERNATIVES

JUNE 2007

An additional consideration in planning lines within Harvey Road is the need to loop the mains through the existing development to the west. A looped system is preferred; therefore, 440-zone mains from the development to Harvey Road will need to be constructed in the northern portion of Harvey Road.

The portion of Harvey Road extending south from H Street is currently served by a 12-inch line, which runs approximately 1,500 LF and terminates at a blow-off valve. This line is adequately sized for service in the area and would be extended southward to accommodate additional service requests. Should a direct connection to the 171 zone be made at the City's 16-inch line located in Pipeline Road, this 12-inch line would become the transmission main to the upper zone. However, this connection would result in extremely high pressure in this 12-inch main and thus is not seen as the most desirable option. Additional discussion regarding this line is found in Section 3.7.3.

3.6.5 *Water Mains from D Street Pump Station to Harvey Road Tank*

An existing 12-inch diameter pipeline, approximately 5,300 LF in length, extends from the PRV at the E Street tank to the Harvey Road tank. This 12-inch main is also connected to a 6-inch main that runs approximately 2,800 LF from the D Street pump station to a connection just east of the E Street tank. This series of water mains are used to fill the Harvey Road tank from the lower 320 zone. At this time, there are no connections off of the 12-inch main; however, service to the East Maple Ridge development will come from this main. The 12-inch main can also be used to convey water back into the 320 zone from the Harvey Road tank through the PRV station.

Once the upper zone booster station is constructed and if it draws solely from the 440 zone, the existing 6-inch main will need to be upsized to a 12-inch line in order to accommodate the projected MDD in conjunction with fire flow demands.

3.6.6 *D Street Booster Station*

The D Street booster station currently includes two 250-gpm pumps that feed the 440 zone from the 320 zone. At this time, the station is set as a lead/lag system with no need to run both pumps because current demands are low within the 440 zone. As development increases in the upper zones, the station will need to be upgraded in regard to pumps size and telemetry in order to handle the increase in demands. This level of upgrade will ultimately depend on the location of the proposed upper zone booster station and the subsequent point or points of withdrawal from the existing system.

Should a decision be made to construct an upper zone booster station at the Harvey Road tank site, the capacity of the D Street station will need to be increased. The enlargement will depend upon the size and capacity of the pumps selected for the upper zone booster station and the chosen operational levels of the Harvey Road tank. In addition, to meet the requirements of DOH, the D Street station will ultimately need to supply the peak hour demand (PHD) of the 320 zone and the MDD of the 440 zone. Preliminary calculations of ultimate build-out place the MDD of the 440 zone at 500 gpm.

If the upper zone booster station draws solely from the 440 zone, the D Street station will be the primary source of supply to the 440 and upper zone. Therefore, the station will need to be upgraded not only to meet the projected demands but also to be redundant and

reliable. In other words, the station must have the ability meet the demands of both zones with the loss of one pump and will also require standby power.

Should the proposed upper zone booster station be constructed to draw from the 16-inch transmission main, the role of the D Street station will be significantly different. In this scenario, the station will eventually require an upgrade to meet the future demands of the 440 zone. However, the demands with regard to serving the upper zone may be limited to augmenting supply.

3.6.7 Existing Sources

At this time, the City's total installed water production capacity can easily accommodate fall, winter, and springtime demands. But the City can only accommodate summertime water demand with voluntary user conservation. Total installed water production capacity (3.55 million gallons per day [MGD]) is about 75% of the City's total instantaneous water right (4.28 MGD). Therefore, the water demand that results from the Subarea development will necessitate an increase in both installed water production capacity and water rights.

To that end, the City has already applied for additional water rights from the Washington State Department of Ecology. The City cannot, however, accurately predict if, or when, these water rights will materialize. At this time, the City has drilled a 1,250 gpm well in its wellfield that it hopes to put into operation in late summer of 2007, and it is drilling a well in Lincoln Park that it hopes will also produce more than 1,000 gpm.

The City expects all Subarea developers to share in the costs to acquire water rights and to establish new water production facilities. Supply of water to purveyors outside of the City is one reason the current demand is nearing the water rights allocation. Birch Bay Water and Sewer District and Bell Bay Jackson Water Association, via their respective Wholesale Water Supply Agreements with the City, will also share in these costs.

3.7 PROPOSED WATER SYSTEM INFRASTRUCTURE

In general, the proposed water system infrastructure for the Subarea should be integrated with the existing water system such that operating strategies conform to existing City practices. In addition, the proposed system shall meet or exceed the City's adopted construction standards and the cost of operation shall be as low as possible.

The City has a well-established operating strategy that is based on generally centralized sources that supply water for distribution through a combination of gravity service, storage reservoirs, and booster stations. Because a portion of the Subarea coincides with the existing system and because the Subarea is also relatively close to the City's large wellfield, it is possible to serve the area through either a connection near the Harvey Road reservoir or via a more direct connection to the 16-inch transmission line extending west from the wellfield area. Both of these scenarios will require a booster station to supply the upper zone.

A third possibility is the construction of additional wells within the Subarea. Wells drilled in close proximity to the proposed upper zone standpipe could eliminate the need for a booster station depending upon the capacity of the wells. At a minimum, a single

well or multiple wells would reduce the size of the downstream booster station and, possibly, the size of the storage standpipe(s). However, the City Public Works Director has expressed a preference to site new wells near existing wellfields.

The proposed water system infrastructure that will be utilized by development within the Subarea includes:

- A storage standpipe or standpipes in the eastern end of the Subarea for service to the upper zone.
- A booster pump station to convey water to the upper zone or well(s) collocated at/near the new standpipe(s).
- A network of distribution mains within the Subarea that provide fire flow and a "looped" system.

Figure 3.5 illustrates the proposed infrastructure including alternative sites for the booster station and the storage standpipe.

3.7.1 Upper Pressure Zone Booster Station

As described previously, supply for the upper zone will come from a connection to the existing system, new wells within the Subarea, or a combination of the two. In order to supply the zone from the existing system, water will need to be pumped from either the 440 zone or from the 16-inch transmission main running along Pipeline Road to the south.

To briefly revisit the City's existing system, the wellfield located south of the Subarea provides a majority of the City's water directly to the 171 zone. Water from this zone is drawn through two booster stations to feed the 320 zone. From there, the D Street booster station pumps water from the 320 zone to the 440 zone. In the future, the City may utilize Well #9 to provide dedicated supply to the 440 zone in the future. This will be verified during the general water system planning process.

Considering this layout, a booster station that draws water from the 440 zone will eventually be supplied by water pumped from Well #9, and from water pumped from the 171 zone to the 440 zone via the 320 zone. Alternatively, a booster station which draws directly from the 171 zone depends solely upon the City's wellfield for supply. These considerations are generally operational in nature, and the City may direct the construction of either station at the time of design.

As described above, the location of the proposed booster station for the upper zone will determine where the connection or connections to the existing system will be made. A major factor in locating this station may be the availability of land on which to construct the station. Currently, the City owns a large parcel of land at the Harvey Road tank. This would be a good location for the booster station and would allow for a fairly simple connection to the existing system.

Draft

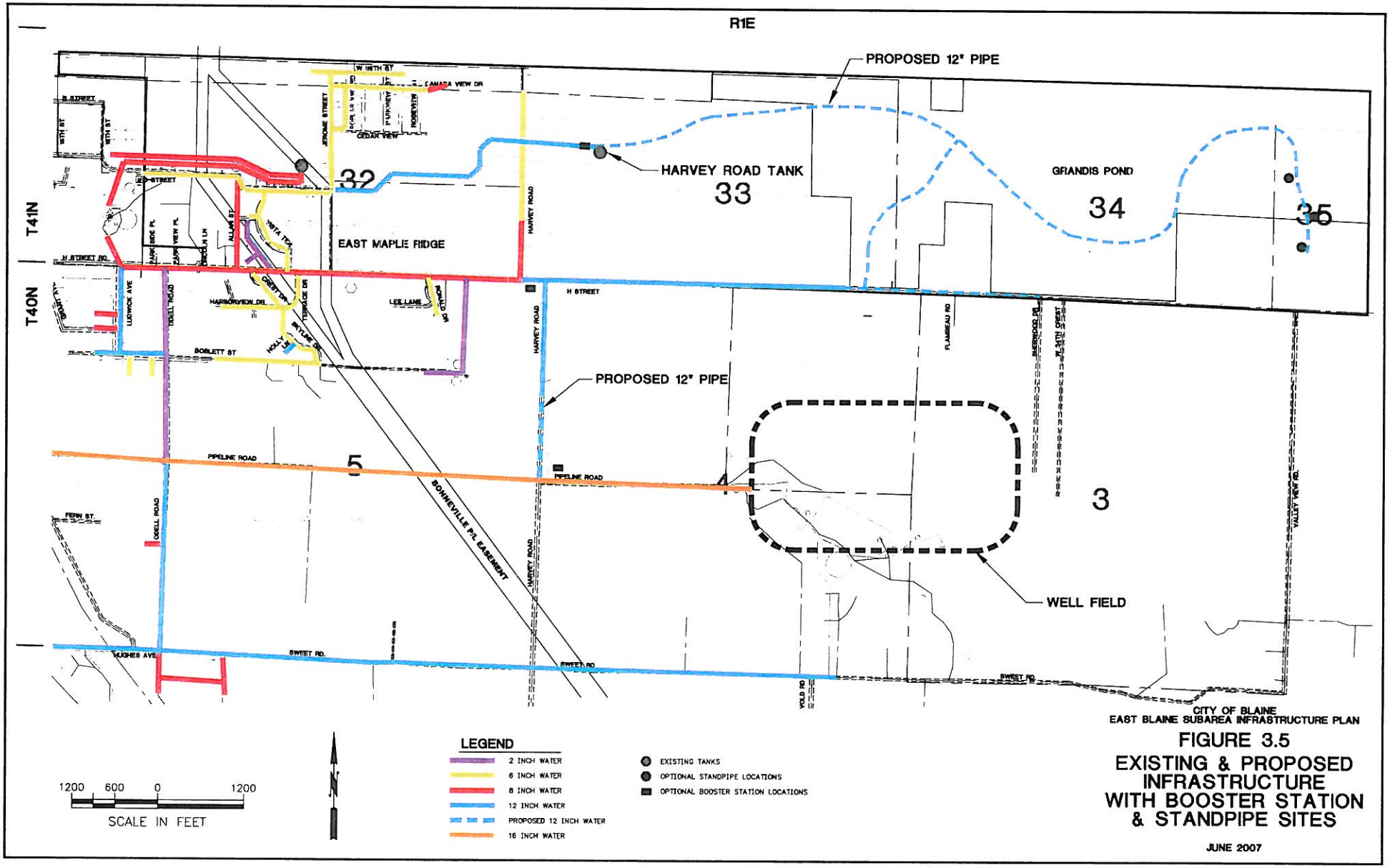

CITY OF BLAINE
EAST BLAINE SUBAREA INFRASTRUCTURE PLAN

FIGURE 3.5
EXISTING & PROPOSED INFRASTRUCTURE WITH BOOSTER STATION & STANDPIPE SITES

JUNE 2007

Alternatively, construction of a booster station close to the intersection of Harvey Road's southern leg with H Street also provides for a good connection point to the existing system.

A third booster station option is the construction of a station at the southern end of Harvey Road close to Pipeline Road. This location allows the City to draw from the 171 zone as described above.

A description of the booster station at each of these locations and the sizing of the stations is further described in the following sections.

Location at Existing Harvey Road Tank

Locating the booster station at the Harvey Road tank would permit the City to utilize the existing property already owned by the City. Construction of the station at this site and in close proximity to the tank would also allow a simple connection to the existing system. Water would be drawn from the tank and operation controls would ultimately be tied to the float levels in the proposed upper zone tank. The site would require three phase power for operation of the pumps and, as described previously, the Harvey Road tank would also require telemetry controls tied to the D Street booster station to maintain the tank levels.

Distribution from the station would follow a pipe alignment either west to Harvey Road and then south to H Street or directly south to H Street along private easements, see Figure 3.4. The decision regarding this route is presumed to depend upon the requests for service along the east side of Harvey Road and on the availability of easements along private property. A PRV station would be constructed in the vicinity of the pump station to provide separation of the 440 zone from the new upper zone. The separation point will also depend upon the development of the nearby properties and the routing of the line from the station. See Section 3.6.3 for more information on pipeline route alternatives.

The benefits of this location would include the construction of the station on property already owned by the City and a simple connection to the existing system. The drawback may be the significant dependence upon the pumping facilities located in the lower zones.

Location at Intersection of Harvey Road and H Street

Locating the station at the intersection of H Street and Harvey Road as it continues south also provides an opportunity to separate the 440 zone and the upper zone. However, with this option additional parallel mains extending north along Harvey Road will also be required to serve the upper zone customers along Harvey Road. As with the tank site station, operational controls for the station would ultimately be tied to the float levels in the proposed upper zone reservoir and the Harvey Road tank would require telemetry controls tied to the D Street booster station to maintain the tank levels.

The drawbacks of construction at this location are that it would require the City to obtain land for the facilities. In addition, there would be costs involved with improving the site including the provision of utilities such as power and possible phone line for a telemetry system.

DRAFT

Location along Southern Leg of Harvey Road

Locating the booster station along the southern portion of Harvey Road, close to Pipeline Road, would allow a direct connection to the City's 16-inch water main. Water would be drawn directly from the 171 zone which is currently serving the majority of the City's urban areas. Operational controls for the station would ultimately be tied to the float levels in the proposed upper zone reservoir.

The distribution system to the upper zone would extend directly north along Harvey Road to H Street. However, for this scenario, the City must acquire land for the station. In addition, the 12-inch main along the southern portion of Harvey Road would need to be extended and connected to the 16-inch main and the systems would require a PRV at the intersection of Harvey Road and H Street.

The main benefit of this location is the connection to the 16-inch main, which eliminates the dependency on the 320 and 440 zone booster stations. However, the operation of this station as described above would result in extremely high system pressure along the southern portion of Harvey Road. Therefore, if this alternative is selected, the City must carefully consider all aspects in regard to operating this high-pressure system including the need for individual PRVs at residences along Harvey Road.

DRAFT

Pump Station Sizing

As mentioned in various sections of this plan, the ultimate sizing of the booster pumps and the station in which they will be placed depends upon how and where water will be supplied to the upper zone and, more importantly, the current and projected system demands at the time of design. Therefore, a more effective approach to pump sizing at this time is to discuss the estimated demands of the Subarea and the relative sizing of the station to meet these demands.

Preliminary build-out estimates indicate that the ultimate PHD for the upper zone will be approximately 1,375 gpm, the MDD would be 648 gpm, and fire flow demands will be 750 gpm. The fire flow requirement is not expected to change; however, the PHD and MDD will start at essentially zero and build as development occurs. Although construction of the booster station is required immediately to provide service within the upper zone, the construction of the storage standpipe is not. The decision as to when the standpipe will be constructed also plays into the design and sizing of the pump station. The logic related to this decision is further expanded below.

It is possible to initially construct the system serving the upper zone as a closed system. This refers to a system in which the pumps provide all service pressure and there is no storage facility. Such a system is comprised of a booster pump station that can supply the maximum demands of the zone, maintain pressure within the zone, and provide the required fire flow. This type of station generally includes a smaller pump to meet the lower demands and a larger fire flow pump or pumps. All of the pumps would be needed at the time of construction of the station. Additional equipment needs would include hydropneumatic tanks to limit pump cycles during low demand periods.

The benefit of a closed system is the ability to postpone the construction of an upper zone storage standpipe until a later date. This choice is viewed as beneficial for the Subarea

considering the estimated build-out of the Grandis Pond development from its western edge eastward and the relative location of the standpipe at the eastern edge of the Subarea.

Utilizing the planning figures presented in Section 3.3, a maximum pumping rate of 1,400 gpm would be required from this station. This figure represents provision of MDD and fire flows to the upper zone. The projected PHD is less than this value and, thus, would also be provided by pumping under normal operating conditions.

The smaller-demand pump and the hydropneumatic tanks should be sized according to the development schedule for the western portion of the Grandis Pond development or any other development within the upper zone. At the time of design, the pumps would be sized to meet the projected demands up to the completion of the standpipe. Based on the projected demands, the design of the system may include variable speed pumps or a staged pump system, which can vary the pump combinations to meet the changing demands.

Once the standpipe is constructed, the system would become an open system and the role of the station would be simply to supply water to the standpipe. At that time, the smaller-demand pump and the hydropneumatic air tanks would no longer be necessary.

The alternative to the closed system is an open system in which the storage standpipe and the pump station are constructed at the same time. This would allow pumps to be added and phased into use as the area develops. It would also reduce the need to supply fire flows because the standpipe would be sized to contain the required fire flow storage. While this option is feasible, it requires the immediate construction of the standpipe at the eastern edge of the Subarea as well as the construction of the 12-inch distribution pipe between the reservoir and the booster station.

Under the open-system scenario, the pump station would be designed to ultimately house all the equipment necessary to meet ultimate build-out demands. Initially, two pumps would be installed to provide supply to the standpipe, thus providing redundancy and reliability. Additional pumps or upsized pumps would be added to the system as demands increased.

3.7.2 Upper Pressure Zone Storage Standpipe

Regardless of the source of supply for the zone, a storage standpipe will ultimately be required to maintain service pressure and to supply the demands within the upper zone. Whether constructed in conjunction with the booster station or at a later date, the proposed standpipe will provide gravity-fed supply and fire flow volumes to the entire upper zone and the majority of the Subarea. Service from this standpipe would be from elevation 540 feet to 353 feet. The recommended type of standpipe is a bolted or welded steel tank.

As discussed in the previous section, the demands of the zone can be met by various options as the area develops. With the Grandis Pond development currently in progress, it is believed that there will be a large amount of development within just a few years. Based on conversations with the developer for Grandis Pond, construction will begin in

DRAFT

the western portion of the property and progress easterly. This development pattern may dictate when it is feasible to construct the standpipe.

In order to establish a single pressure zone east of the 440 zone, the required standpipe will be tall and will contain a large amount of dead storage. To maintain the optimum amount of buildable land, the low-water elevation of the tank would be set at 610 feet. This level equates to 70 feet of dead storage, and maintains the required minimum service pressure of 30 psi to areas in close proximity to the standpipe. Under fire flow conditions, approximately 46 feet of dead storage would maintain the required 20 psi. Setting this low "service pressure" water elevation at 610 feet accommodates construction on land with an elevation of 540 feet and lower as illustrated by the dark shading in Figure 3.6.

It is also possible to serve this zone with a shorter standpipe; however, this would require the expansion of the non-buildable zone around the base of the tank or the construction of an additional booster station, thus creating an additional pressure zone higher than the upper zone. The relationship between buildable land and water surface elevation is one-to-one; therefore, lowering the low-water elevation by one foot lowers the buildable land elevation by one foot. To illustrate, the lighter-shaded area in Figure 3.6 shows the ring of non-buildable land related to a standpipe low-water elevation of 590 feet.

The ultimate standpipe height and the water elevation above the low-water elevation will be determined during design. The height will be based on the reservoir diameter and the required storage volumes for the zone. The required storage volumes rely, in turn, on the projected zone demands, the size of the downstream booster station, and the phasing of the pumps within that station. A standpipe capable of serving the entire area is not required immediately; however, the design of the standpipe should be based on the ultimate build-out demands of the zone because adding capacity to a reservoir is generally not feasible.

Based on the planning figures presented in Section 3.3, the size of the standpipe would range from a 35- to 50-foot diameter tank with heights between 98 and 111 feet. As described above, these variables relate to the capacity of the pumps supplying the tank. Table 3.1 provides examples of tank sizes based on a low-water elevation of 610 feet and a tank base elevation of 540 feet.

Table 3.1
Booster Station Pump Capacity in Relation to Standpipe Size

Assumption: downstream booster pump station capacity = 800 gpm (fire flow volumes in standpipe)

Required Storage (gallons)	*Estimated Standpipe Diameter (feet)*	*Estimated Standpipe Height (feet)*	*Dead Storage (gallons)*
494,850	45	111	549,373
494,850	50	103	678,238

DRAFT

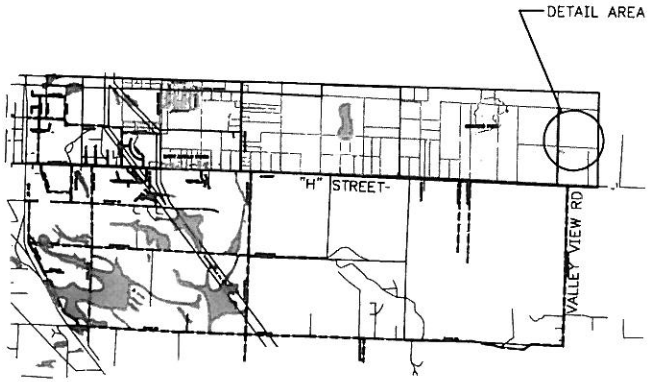

VICINITY MAP

N.T.S.

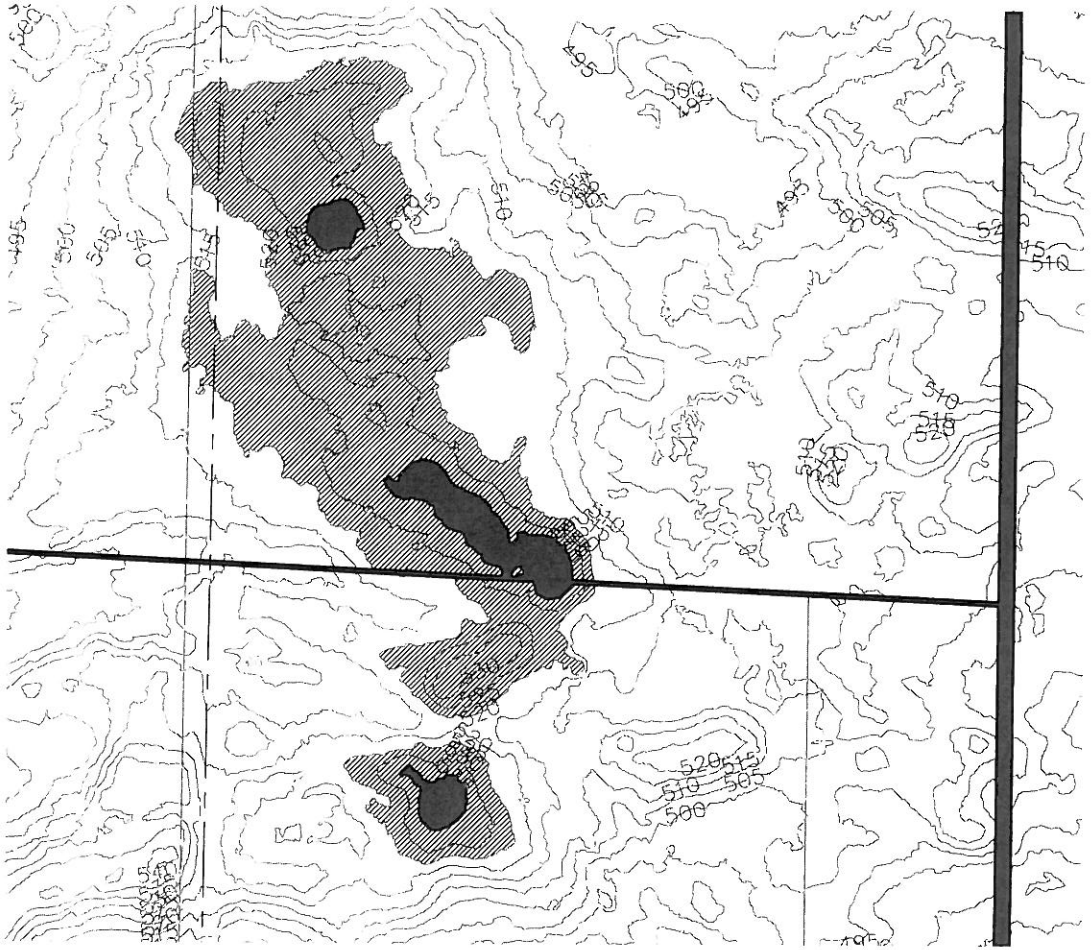

LEGEND

NON-BUILDABLE LAND WITH LOW-WATER ELEVATION EQUAL TO 610 FEET

NON-BUILDABLE LAND WITH LOW-WATER ELEVATION EQUAL TO 590 FEET

200 100 0 200 400

SCALE IN FEET

N

CITY OF BLAINE
EAST BLAINE SUBAREA INFRASTRUCTURE PLAN

FIGURE 3.6
TANK SITES UNBUILDABLE AREA

JUNE 2007

Assumption: downstream booster pump station capacity = 1,500 gpm (fire flow volumes in standpipe)			
275,000	35	107.5	332,337
275,000	40	98.5	434,072

As illustrated in the table, the effect of increasing the capacity of the booster station relates directly to the reduction of the standpipe height and diameter. Building a higher capacity station may reduce the initial construction costs; however, maintenance and life cycle costs of the booster station will increase.

3.7.3 *Proposed 12-Inch Water Main from Booster Station at Harvey Road Tank*

As described in Section 3.6.3, the construction of the upper zone booster station at the Harvey Road tank site will require a conveyance pipeline to transfer water from the station to the upper zone. The existing 12-inch pipeline along H Street will become the backbone of this system; however, a connection between the booster station and the 12-inch line in H Street must be made. It is assumed the City will elect to maintain service to the west side of Harvey Road from the lower 440 zone. Therefore, the existing lines along Harvey Road will be dedicated to the lower zone. The proposed line from the station to H Street will either follow a path west from the station to Harvey Road and then south to H Street, or it can be installed in an alignment directly south from the station along easements until it reaches H Street.

Regardless of the conveyance alignment, the pipe must be a 12-inch line to maintain the build-out capacity for the upper zone.

3.7.4 *Extension of 12-Inch Water Main along H Street*

The extension of the 12-inch main east along H Street from the existing end point will be required to establish the backbone of the distribution system. The 12-inch main should continue east along H Street to the point where it jogs north through the Grandis Pond development to its connection with the proposed standpipe.

Service to the southeastern corner of the Subarea will most likely come from connections through the Grandis Pond property. Easements or dedicated right-of-ways will be required to provided service through to the properties to the east. An alternative would be the continuation of the line along H Street to the eastern edge of the Grandis Pond development. However, this is not a preferred alternative because it would create a long run with limited use.

As the City reviews the proposed water system for the Grandis Pond development, the City must come to an agreement with the developer regarding the layout of service to the east and the timeline for completion.

3.7.5 *Extension of 12-Inch Water Main along Southern Leg of Harvey Road*

The extension of the 12-inch water main along the southern leg of Harvey Road would only be completed if the upper zone booster station was sited to draw from the 16-inch line. The construction of the station would allow the City to draw water from the 171 zone and, therefore, a main would be required to make the connection to the 16-inch line

Draft

in Pipeline Road. An additional concept regarding a booster station and connection to the 16-inch main to serve the Harvey Road tank is further described in Section 3.7.9.

3.7.6 Water Main along Mott's Hill Parkway

A segment of water main would extend east from the Harvey Road tank and follow a proposed road alignment, known as Mott's Hill Parkway, through the Grandis Pond development to a connection point with the 12-inch line serving the standpipe. This line would serve as a primary loop through the Subarea and as a second conveyance line for water pumped from the Harvey Road tank to the upper zone standpipe. This main should be a 12-inch line as it will convey flows through the upper portion of the Subarea including fire flows to looped segments north of Mott's Hill Parkway.

In terms of phasing, if the 12-inch main in H Street is initially extended to the standpipe, the Mott's Hill Parkway pipeline could be constructed at a later date, during roadway construction. However, if the properties north of Mott's Hill Parkway are developed prior to completion of the Parkway loop, their water service will most likely come off of the 12-inch line in H Street. Careful review of individual development plans will be required to facilitate the future construction and completion of this loop should properties develop prior to the completion of Mott's Hill Parkway.

3.7.7 Distribution Mains

The water distribution system within the Grandis Pond and East Maple Ridge developments will be designed by the engineers working for each developer and reviewed by the City. The criteria used for review will include the requirement of looped mains within the developments wherever feasible, the construction of the backbone of the water system when located on the developers' property, and the construction of connection points to facilitate service through to other parcels. As described above, the construction of the backbone may entail the completion of an entire line or portions of oversized lines that will be connected to future developments.

The distribution mains and system looping to serve the remaining properties within the Subarea will be designed and constructed to fall within proposed roadways, extending the existing system, as required, to connect to proposed plats and improvements. The goal of this plan is to provide access (roads) and water service to every parcel of land. Thus, proposed roadway alignments must also consider the design of water mains (and sewer mains). The design shall consider parcels fronting on the proposed roads. Systems shall be designed to create loops contained either entirely within a proposed plat or, possibly, as regional loops that encompass multiple properties. The use of hydraulic modeling will be beneficial in analyzing and planning a system that promotes high flow rates and good water quality.

Ultimately, the water system of the Subarea will constitute a grid of lateral mains running east/west and connecting at roadways running north and south. Water mains within these north/south roadways will then be connected to other east/west-running mains and, ultimately, to the backbone of the system along H Street and Mott's Hill Parkway. Unlike sewers, the grade of the proposed roadways will not effect the construction of this grid system throughout the Subarea.

DRAFT

3.7.8 *Distribution Mains Within 440 Zone*

New construction in the 440 zone shall meet the standards stated herein. Currently, a small grid exists in the Caples Addition area along the US/Canada border. This system is fed by a long run of 6-inch line connected at Jerome Street and D Street. This 6-inch line needs to either be upsized to provide adequate fire flow or looped with a larger-diameter pipe that can supplement flows to the area. The final choice will most likely be made when development is proposed for the area. However, should it be decided to loop the system within the Caples Addition area using the mains along Harvey Road, then this factor must be considered when sizing the lines in the northernmost segment of Harvey Road.

3.7.9 *Booster and Pipeline from Wellfield to Harvey Road Tank*

In the *East Blaine Water Study* by APC, March 1998, an approach to serve the Subarea directly from the City's wellfield was proposed. The approach is similar to one of the scenarios within this plan in terms of moving water more directly from the wellfield to the Subarea. However, under the APC approach, a proposed booster station and pipeline would essentially draw water directly from the wellfield and, thus, allow the existing transmission mains on Pipeline Road and Sweet Road, as well as existing pump stations and tanks in the 171 and 320 zones, to continue to handle demands associated with serving the Central Blaine Area, Semiahmoo, and the City's wholesale customers.

The booster station and pipeline would provide a very efficient means of supplying water to the Subarea; however, miles of additional high pressure transmission main dedicated to the upper zone would be required to transfer water from the wellfield to the upper zone within the Subarea.

3.7.10 *Modifications to E Street Reservoir and D Street Booster Station*

The E Street reservoir—a 100,000-gallon tank that serves the 320 zone—cannot meet the storage requirements for the existing demand and relies on the Harvey Road tank to augment the 320 zone supply. Previous studies have recommended that the E Street reservoir be replaced with a 750,000-gallon tank, and doing so would free up capacity in the Harvey Road tank and reduce the associated downstream pump cycles. In addition, standby power must be added to the E Street facility.

The D Street booster station currently houses two 250-gpm pumps to feed the 440 zone from the 320 zone. At a minimum, an upgrade will be required to meet the future demands of the 440 zone and to be in compliance with DOH requirements as discussed in Section 3.6.6. However, if a decision is made to supply the upper zone from the 440 zone—in part or entirely, the capacity of the booster station will need to be increased as dictated by the design of the upper zone facilities. If the upper zone relies entirely on the 440 zone for water supply, the D Street station must be redundant and reliable. It will need to be able to meet the needs of the two zones with only one pump and will require standby power. In addition, adequate telemetry controls between the booster station and the Harvey Road tank will be necessary to maintain operational levels in the tank. Design modifications for the D Street station should include visual mitigation for the increased size and address access protection.

DRAFT

3.8 PHASING OPPORTUNITIES AND CONSTRAINTS

Oftentimes, utility infrastructure is built as a complete unit to reduce initial costs; however, at times it can be built in phases. Phasing of the water infrastructure within the Subarea relates to the construction of facilities initially required to provide immediate service and of the subsequent facilities ultimately necessary to meet increasing system demands. Phasing may also be dictated by timelines outside of the City's control, e.g., water rights acquisition. Considerations related to water system phasing are summarized below.

3.8.1 12-Inch Main along H Street

The extension of the 12-inch main along H Street will be required as development progresses east from its current point of termination. At the present time, there is a limited amount of service capacity along H Street from the existing 12-inch line in terms of providing adequate service pressure. In addition, the existing 12-inch line terminates at an approximate elevation of 353 feet, which is the upper limit of service from the 440 zone. It is therefore recommended that any extension of the 12-inch line along H Street be delayed until the upper zone is created, including the construction of the booster station. Completion of this booster station would provide higher service pressures beyond the reach of the existing line and would increase pressures in existing areas that are currently close to substandard.

In other words, development above 353 feet in elevation is dependent upon booster station construction. It is assumed that the Grandis Pond development will take the lead in development east of the existing line and, most likely, will construct the extension of the 12-inch line and the booster station with reimbursement from other users as they connect. However, should this project stall, the developers of other properties within the upper zone would be required to construct the line and booster station prior to building within the upper zone.

3.8.2 Upper Pressure Zone Booster Station and Standpipe

It is recommended that initially a booster station serving the upper zone be constructed to provide service into a closed system. The station would be designed and configured to provide continual service pressure and fire flows to a limited area or a predetermined number of connections as agreed upon by the City. This would allow developers such as Grandis Pond to extend the existing 12-inch main to service properties eastward towards the standpipe site. Once it is feasible to access the standpipe site or upon reaching the allowable number of connections, the construction of the standpipe and the connection to the 12-inch line would be required. The booster station would then be reconfigured to supply water solely to the standpipe.

In conjunction with the construction of the booster station and creation of the upper zone, the connections between the 440 zone and the upper zone must also be established. This will include a PRV station between the zones and the construction of lines in the area of Harvey Road from the booster station site to the existing 12-inch line in H Street.

3.8.3 Water Mains Along Harvey Road

It is anticipated that upgrades to the existing lines and extension along Harvey Road will be constructed fairly early in the development of the Subarea. The design of these

DRAFT

elements must be coordinated with the creation of the upper zone and upgrades to lines in H Street.

3.8.4 Water Main along Mott's Hill Parkway from Harvey Road to Standpipe

It is presumed that the Mott's Hill Parkway water main loop will be constructed as the properties along the northern boundary are developed. However, it is recommended that this line be constructed as soon as practicable to facilitate a looped system for reliability purposes and improved fire flows.

3.8.5 Booster and Pipeline from Wellfield to Harvey Road Tank

Should this alternative be chosen, the facility would be required in the beginning stages of development as described for the booster station options at other locations.

3.9 PROPERTY AND EASEMENT ACQUISITION

Generally, property acquisition for the construction of the water system components will parallel property reserved and acquired for future roadways. As developments are proposed for review, the City will determine the appropriate amount and location of land required for the installation of roads and utilities. Oftentimes, these right-of-ways or easements will be set aside strictly for future utility connections as adjacent parcels develop.

Two specific components of the water system that will require land acquisition are the standpipe and, possibly, the booster station. The standpipe site will require that a parcel of land be dedicated to the City and, based on the size and height of the standpipe, an area may also be delineated as a no-build zone due to limitations in supplying minimum water pressure.

As discussed previously, construction of the upper zone booster station will require the acquisition of land if it is not sited at the City's Harvey Road reservoir.

3.10 GROUNDWATER MANAGEMENT AREA/WELLHEAD PROTECTION

The entire Subarea falls within the Blaine Groundwater Management Area (GWMA) as defined in *Blaine Ground Water Management Program: Final Hydrogeologic Report*, September 2, 1992, Golder Associates, Inc. The GWMA roughly coincides with the Dakota Creek watershed. Except for the very western downslope portion of the Subarea, East Blaine falls within the *boundary upland* region of the GWMA, which provides the primary groundwater recharge for the watershed. The rate at which the precipitation infiltrates into the underlying aquifers in the Subarea depends upon the soil types. The predominant soils in the Subarea fall into hydrologic groups A and B (see Figure 5.3), which have a moderate to high infiltration rate. The groundwater travels both vertically and horizontally, replenishing numerous aquifers—many of which supply the City with its water, discharging as springs, and/or augmenting the Dakota Creek flow. Specific groundwater travel times are illustrated on Figure 5.4.

The City has conservatively designated a 5-year wellhead protection area that encompasses the entire Subarea. Regulations apply to certain activities within such an area, particularly as they apply to specific activities such as storage tank installation, pesticide storage and use, and dangerous waste handling. In addition, best management

Draft

practices should be developed to guide all site users in ways to minimize contamination. Resources for wellhead and groundwater protection program are listed at the end of this Section.

3.11 POLICIES

During development planning, the following polices should be used as a guide in the design of water supply elements.

- The water system shall meet DOH requirements.
- All design shall be sized and configured to accommodate ultimate build-out as portrayed in this infrastructure plan.
- Participation by developers in the process of developing additional sources and increasing water rights is expected.

3.12 RESOURCES

Wellhead Protection Program Guidance Document, Washington Department of Health, publication 331-018

Critical Aquifer Recharge Area Guidance, Washington Department of Ecology, publication 05-10-028

Draft

Usable Storage

ASSUMES CONST OF SWR BPS

	Res #1 (171)	Res #2 (320)	Res #3 (330)	Res #4 (171)	Res #5 (440)
Diameter	90	27	44	80	50
Base Elev	150	296	242	135	360
Height (overflow)	171	320	330	170	440
Storage Volume gal	998,793	102,733	1,000,367	1,315,283	1,174,360
Storage per foot	47,562	4,281	11,368	37,580	14,680
Lowest HGL per city staff	157	306	312	157	430
Highest service elev. obtainable per city HGL	87.7	236.7	242.7	87.7	360.7
Highest exist. service elev. in zone	**85**	210	230	**92**	355
Highest potential. service elev. in zone	**85**	210	239	**92**	360
Lowest HGL for exisitng service	154.3	279.3	299.3	161.3	424.3
Lowest HGL for potential service	154.3	279.3	308.3	161.3	429.3
Lowest HGL for existing FF	131.0	256.0	276.0	138.0	401.0

Assumed BPS at Hanies Rd.

Usable Ser gal	794,278	102,733	246,681	326,942	157,071
Usable FF gal	205,942	18,535	49,223	162,719	63,562
Dead	0	0	704,463	825,622	953,727

Usable & Fireflow volumes presented separate

Usable (30 psi+)	0	102,733	246,681	0	157,071
FF as remaining	205,942	-84,198	-197,459	162,719	-93,508
Dead	0	0	704,463	825,622	953,727

Storage Requirements (City as a whole) **ASSUMES CONST OF SWR BPS**

	2009	*2010*	*2011*	*2012*	*2013*	*2014*	*2019*	*2024*	*2029*
Operational	1603323	1603323	1629746	1629746	1629746	1629746	1629746	1629746	1629746
Equalizing	-78,585	-256,402	-343,874	-333,488	-322,732	-309,921	-251,095	-177,408	-89,457
Standby	-1,264,598	-1,855,917	-2,733,216	-2,672,421	-2,609,456	-2,534,468	-2,190,117	-1,758,781	-1,243,947
Fire Flow	240,000	240,000	300,000	300,000	300,000	300,000	300,000	300,000	300,000
Total (disregard neg')	1,843,323	1,843,323	1,929,746	1,929,746	1,929,746	1,929,746	1,929,746	1,929,746	1,929,746
Total (Nesting FF)	1,603,323	1,603,323	1,629,746	1,629,746	1,629,746	1,629,746	1,629,746	1,629,746	1,629,746
*Usable Storage 30+	1,627,705	1,627,705	1,815,603	1,815,603	1,815,603	1,815,603	1,815,603	1,815,603	1,815,603
Usable FF Storage 20-30	499,981	499,981	540,651	540,651	540,651	540,651	540,651	540,651	540,651
Surplus/Deficit 30+ (No nest)	-215,618	-215,618	-114,143	-114,143	-114,143	-114,143	-114,143	-114,143	-114,143
Surplus/Deficit 30+ (w/ nest)	24,382	24,382	185,857	185,857	185,857	185,857	185,857	185,857	185,857
W/ Fireflow in 20-30	24,382	24,382	185,857	185,857	185,857	185,857	185,857	185,857	185,857
Dead	4,591,536	4,591,536	4,591,536	4,591,536	4,591,536	4,591,536	4,591,536	4,591,536	4,591,536

Equalizing Storage (ES)

ES = (PHD -Qs)(150min)

Qs =	2464	gpm	
2010 Qs =	3714	Well 5.1	
2011 Qs =	4364	Well 8.1	

Standby Storage (SB)

SB = (2 days)(ADD)(N)-tm(Qs-QL)

QL =	450	gpm	
2010 QL =	1250	gpm	
2011 QL =	1250	gpm	

ADD = 190 gpd/ERU

Note: Storage requirements based on current water rights usage

	2009	**2010**	**2011**	**2012**	**2013**	**2014**	**2019**	**2024**	**2029**
PHD (gpm)	1940.1	2004.7	2071.5	2140.7	2212.5	2297.9	2690.0	3181.3	3767.6
ERU	4,304	4,453	4,608	4,768	4,933	5,131	6,037	7,172	8,527

Fire Suppression Storage (FSS)

FSS = (FF)(t)

FF =	1,000	gpm
t =	60	mins

Storage Requirements (171 Zone) Independent Analysis

	2009	*2009*	*2010*	*2010*	*2011*	*2011*	*2012*	*2012*	*2013*	*2013*	*2014*	*2014*	*2019*	*2019*	*2024*	*2024*	*2029*	*2029*
Operational (14 ft)	1191975	681129	1191975	681129	1191975	681129	1191975	681129	1191975	681129	1191975	681129	1191975	681129	1191975	681129	1191975	681129
Equalizing	119,024	119,024	133,788	-23,712	149,908	-105,092	166,779	-88,221	184,579	-70,421	205,770	-49,230	298,940	43,940	411,074	156,074	534,002	279,002
Standby	0	0	0	0	0	0	0	0	0	0	0	0	0	0	0	0	0	0
Fire Flow	60,000	60,000	60,000	60,000	60,000	60,000	60,000	60,000	60,000	60,000	60,000	60,000	60,000	60,000	60,000	60,000	60,000	60,000
Total (disregard neg')	1,370,999	860,152	1,385,763	717,416	1,401,884	636,037	1,418,754	652,907	1,436,554	670,708	1,457,745	691,899	1,550,915	785,069	1,663,049	897,203	1,785,978	1,020,131
Total (Nesting FF)	1,310,999	800,152	1,325,763	657,416	1,341,884	576,037	1,358,754	592,907	1,376,554	610,708	1,397,745	631,899	1,490,915	725,069	1,603,049	837,203	1,725,978	960,131
*Usable Storage 30+	1,121,220	1,121,220	1,121,220	1,121,220	1,121,220	1,121,220	1,121,220	1,121,220	1,121,220	1,121,220	1,121,220	1,121,220	1,121,220	1,121,220	1,121,220	1,121,220	1,121,220	1,121,220
Usable FF Storage 20-30	368,661	368,661	368,661	368,661	368,661	368,661	368,661	368,661	368,661	368,661	368,661	368,661	368,661	368,661	368,661	368,661	368,661	368,661
Surplus/Deficit 30+ (No nest)	(249,779)	261,068	(264,543)	403,804	(280,664)	485,183	(297,534)	468,313	(315,334)	450,513	(336,525)	429,322	(429,695)	336,151	(541,829)	224,018	(664,758)	101,089
Surplus/Deficit 30+ (w/ nest)	(189,779)	321,068	(204,543)	463,804	(220,664)	545,183	(237,534)	528,313	(255,334)	510,513	(276,525)	489,322	(369,695)	396,151	(481,829)	284,018	(604,758)	161,089
W/ Fireflow in 20-30psi	(189,779)	321,068	(204,543)	463,804	(220,664)	545,183	(237,534)	528,313	(255,334)	510,513	(276,525)	489,322	(369,695)	396,151	(481,829)	284,018	(604,758)	161,089
Dead																		

***ASSUMES CONST OF SWR BPS**

Analysis with no additional source capacity

Analysis with additional capacity from new wells

Equalizing Storage (ES)

ES = (PHD -Qs)(150min)

Qs = 2464 gpm

2010 Qs = 3514 gpm Well 5.1 (1250 gpm)

2011 Qs = 4164 gpm Well 8.1 (650 gpm)

Standby Storage (SB)

SB = (2 days)(ADD)(N)-tm(Qs-QL)

QL = 450 gpm

2010 QL = 1250 gpm

2011 QL = 1250 gpm

Peak Hour Demand (PHD)

PHD = (MDD/1440)[(C*N)+F]+18+water loss

ADD = 190 gpd/ERU

	2009	**2010**	**2011**	**2012**	**2013**	**2014**	**2019**	**2024**	**2029**
PHD (gpm)	1290	1332	1376	1420	1467	1523	1776	2094	2473
ERU	2803	2900	3001	3103	3211	3339	3924	4659	5534

Fire Suppression Storage (FSS)

FSS = (FF)(t)

FF = 1,000 gpm

t = 60 mins

Storage Requirements (320 Zone) Independent Analysis

	2009	*2010*	*2011*	*2012*	*2013*	*2014*	*2019*	*2024*	*2029*
Operational (14ft)	59928	59928	59928	59928	59928	59928	59928	59928	59928
Equalizing	0	0	0	0	0	0	0	0	0
Standby	0	0	0	0	0	0	0	0	0
Fire Flow	60,000	60,000	60,000	60,000	60,000	60,000	60,000	60,000	60,000
Total (disregard neg')	119,928	119,928	119,928	119,928	119,928	119,928	119,928	119,928	119,928
Total (Nesting FF)	59,928	59,928	59,928	59,928	59,928	59,928	59,928	59,928	59,928
*Usable Storage 30+	102,733	102,733	102,733	102,733	102,733	102,733	102,733	102,733	102,733
Usable FF Storage 20-30	18,535	18,535	18,535	18,535	18,535	18,535	18,535	18,535	18,535
Surplus/Deficit 30+ (No nest)	(17,195)	(17,195)	(17,195)	(17,195)	(17,195)	(17,195)	(17,195)	(17,195)	(17,195)
Surplus/Deficit 30+ (w/ nest)	42,805	42,805	42,805	42,805	42,805	42,805	42,805	42,805	42,805
W/ Fireflow in 20-30	42,805	42,805	42,805	42,805	42,805	42,805	42,805	42,805	42,805

Equalizing Storage (ES)

ES = (PHD -Qs)(150min)

Qs = 1225 gpm PS #1 and # 5

Standby Storage (SB)

SB = (2 days)(ADD)(N)-tm(Qs-QL)

QL = 500 gpm

ADD = 190 gpd/ERU

Peak Hour Demand (PHD)

PHD = (MDD/1440)[(C*N)+F]+18+water loss

	2009	**2010**	**2011**	**2012**	**2013**	**2014**	**2019**	**2024**	**2029**
PHD (gpm)	364.6	374.0	383.7	393.6	403.9	416.9	470.7	539.4	620.5
ERU	664	685	708	731	755	785	909	1068	1255

Fire Suppression Storage (FSS)

FSS = (FF)(t)

FF = 1,000 gpm

t = 60 mins

Storage Requirements (440 Zone) Independent Analysis

	2009	*2009*	*2010*	*2010*	*2011*	*2011*	*2012*	*2012*	*2013*	*2013*	*2014*	*2014*	*2019*	*2019*	*2024*	*2024*	*2029*	*2029*
Operational (10ft)	146800	73400	146800	73400	146800	73400	146800	73400	146800	73400	146800	73400	146800	73400	146800	73400	146800	73400
Equalizing	0	0	0	0	0	0	0	0	0	0	0	0	0	0	0	0	0	0
Standby	84,463	0	87,733	0	45,560	0	47,290	0	49,128	0	51,094	0	61,585	0	74,463	0	90,058	0
Fire Flow	60,000	60,000	60,000	60,000	60,000	60,000	60,000	60,000	60,000	60,000	60,000	60,000	60,000	60,000	60,000	60,000	60,000	60,000
Total (disregard neg')	291,263	133,400	294,533	133,400	252,360	133,400	254,090	133,400	255,928	133,400	257,894	133,400	268,385	133,400	281,263	133,400	296,858	133,400
Total (Nesting FF)	231,263	73,400	234,533	73,400	192,360	73,400	194,090	73,400	195,928	73,400	197,894	73,400	208,385	73,400	221,263	73,400	236,858	73,400
*Usable Storage 30+	157,071	157,071	157,071	157,071	157,071	157,071	157,071	157,071	157,071	157,071	157,071	157,071	157,071	157,071	157,071	157,071	157,071	157,071
Usable FF Storage 20-30	63,562	63,562	63,562	63,562	63,562	63,562	63,562	63,562	63,562	63,562	63,562	63,562	63,562	63,562	63,562	63,562	63,562	63,562
Surplus/Deficit 30+ (No nest)	(134,193)	23,671	(137,462)	23,671	(95,289)	23,671	(97,019)	23,671	(98,857)	23,671	(100,823)	23,671	(111,314)	23,671	(124,192)	23,671	(139,787)	23,671
Surplus/Deficit 30+ (w/ nest)	(74,193)	83,671	(77,462)	83,671	(35,289)	83,671	(37,019)	83,671	(38,857)	83,671	(40,823)	83,671	(51,314)	83,671	(64,192)	83,671	(79,787)	83,671
W/ Fireflow in 20-30	(74,193)	83,671	(77,462)	83,671	(35,289)	83,671	(37,019)	83,671	(38,857)	83,671	(40,823)	83,671	(51,314)	83,671	(64,192)	83,671	(79,787)	83,671

Analysis with no additional source capacity
Analysis with additional capacity from new wells

Equalizing Storage (ES)

ES = (PHD -Qs)(150min)

Qs = 500 gpm PS #2
2010 Qs = 700 gpm Well 9

Standby Storage (SB)

SB = (2 days)(ADD)(N)-tm(Qs-QL)

2010 QL = 250 pgm

Peak Hour Demand (PHD)

PHD = (MDD/1440)[(C*N)+F]+18+water loss

ADD = 190 gpd/ERU

(construction of 630 zone 2011)

	2009	**2010**	**2011**	**2012**	**2013**	**2014**	**2019**	**2024**	**2029**
PHD (gpm)	157.4	162.1	102.3	104.8	107.4	110.2	125.0	143.3	165.4
ERU	222	231	120	124	129	134	162	196	237

Fire Suppression Storage (FSS)

FSS = (FF)(t)

FF = 1,000 gpm
t = 60 mins

Storage Requirements (630 Zone) Independent Analysis

	2009	*2010*	*2011*	*2012*	*2013*	*2014*	*2019*	*2024*	*2029*
Operational			26423	26423	26423	26423	26423	26423	26423
Equalizing	0	0	0	0	0	0	0	0	0
Standby	0	0	0	0	0	0	0	0	0
Fire Flow	60,000	60,000	60,000	60,000	60,000	60,000	60,000	60,000	60,000
Total (disregard neg')	60,000	60,000	86,423	86,423	86,423	86,423	86,423	86,423	86,423
Total (Nesting FF)	0	0	26,423	26,423	26,423	26,423	26,423	26,423	26,423
*Usable Storage 30+	0	0	105,629	105,629	105,629	105,629	105,629	105,629	105,629
Usable FF Storage 20-30	0	0	22,877	22,877	22,877	22,877	22,877	22,877	22,877
Surplus/Deficit 30+ (No nest)	0	0	19,206	19,206	19,206	19,206	19,206	19,206	19,206
Surplus/Deficit 30+ (w/ nest)	0	0	79,206	79,206	79,206	79,206	79,206	79,206	79,206
W/ Fireflow in 20-30	0	0	79,206	79,206	79,206	79,206	79,206	79,206	79,206

Equalizing Storage (ES)

ES = (PHD -Qs)(150min)

Qs = 1100 gpm

Standby Storage (SB)

SB = (2 days)(ADD)(N)-tm(Qs-QL)

p1 100
p2 500
p3 500

Peak Hour Demand (PHD)

PHD = (MDD/1440)[(C*N)+F]+18+water loss

ADD = 190 gpd/ERU

	2009	**2010**	**2011**	**2012**	**2013**	**2014**	**2019**	**2024**	**2029**
PHD (gpm)	0.0	0.0	102.3	104.8	107.4	110.2	125.0	143.3	165.4
ERU	0	0	120	124	129	134	162	196	237

Fire Suppression Storage (FSS)

FSS = (FF)(t)

FF = 1,000 gpm
t = 60 mins

Assumed 630 Booster Station capacity 1100 gpm
Assumed 630 Reservior Dia. 30 ft.
Assumed Operational Storage Depth 5 ft.
Assumed Total Usable Storage Depth 20 ft

Storage Requirements (330 & 360 Zones) Independent Analysis

	2009	*2010*	*2011*	*2012*	*2013*	*2014*	*2019*	*2024*	*2029*
Operational (18ft)	204620	204620	204620	204620	204620	204620	204620	204620	204620
Equalizing	0	0	0	0	0	0	0	0	0
Standby	327,496	344,112	361,264	379,488	398,248	418,080	438,984	460,960	484,008
Fire Flow	60,000	60,000	60,000	60,000	60,000	60,000	60,000	60,000	60,000
Total (disregard neg')	592,116	608,732	625,884	644,108	662,868	682,700	703,604	725,580	748,628
Total (Nesting FF)	532,116	548,732	565,884	584,108	602,868	622,700	643,604	665,580	688,628
*Usable Storage	246,681	246,681	246,681	246,681	246,681	246,681	246,681	246,681	246,681
Surplus/Deficit 30+ (No nest)	(345,435)	(362,051)	(379,203)	(397,427)	(416,187)	(436,019)	(456,923)	(478,899)	(501,947)
Surplus/Deficit 30+ (w/ nest)	(285,435)	(302,051)	(319,203)	(337,427)	(356,187)	(376,019)	(396,923)	(418,899)	(441,947)
W/ Fireflow in 20-30	(285,435)	(302,051)	(319,203)	(337,427)	(356,187)	(376,019)	(396,923)	(418,899)	(441,947)

Equalizing Storage (ES)

ES = (PHD -Qs)(150min)

Qs = 1100 gpm

Standby Storage (SB)

SB = (2 days)(ADD)(N)-tm(Qs-QL)

p1 600

p2 650

Peak Hour Demand (PHD)

PHD = (MDD/1440)[(C*N)+F]+18+water loss

ADD = 268 gpd/ERU

	2009	**2010**	**2011**	**2012**	**2013**	**2014**	**2019**	**2024**	**2029**
PHD (gpm)	749.1	777.6	806.0	837.5	869.1	869.6	903.2	938.8	975.4
ERU	611	642	674	708	743	780	819	860	903

Fire Suppression Storage (FSS)

FSS = (FF)(t)

FF = 1,000 gpm

t = 60 mins

City of Blaine - Modeling

West Blaine Model

2009

1	611 ERU @ (Semiahmoo)	268 gpd/ERU =	114 gpm	"A"
2	Birch Bay Meter - Semiahmoo Drive		50 gpm	"B"
	Golf Course		300 gpm	

East Blaine Model

2009

3	Total Demand - "A"-"B"-"C"-"D"	504 gpm	
4	Birch Bay Total - "B" (Blaine Road Meter)	665 gpm	"C"
5	Bell Bay Jackson Total	23 gpm	"D"

Sum of 1-5 should equal ADD and MDD shown in Tables 3.2

C = sum of C1 and C2

		"A"	"B"	"C"	"D"
2009	611	114.0	50	615	23
2010	642	119.7	50	629	23
2011	674	125.7	50	645	24
2012	708	132.0	50	663	25
2013	743	138.6	50	682	26
2014	780	145.5	50	706	27
2019	819	152.8	50	838	32
2024	860	160.4	50	995	33
2029	903	168.4	50	1152	33

	Blaine Rd C1	Portal Way C2
2009	338	277
2010	346	283
2011	355	290
2012	365	298
2013	375	307
2014	388	318
2019	461	377
2024	547	448
2029	634	518

MDD factors
Blaine = 2.0
BBWSD = 2.20
BBJ = 1.70

	As provided by BBWSD
	numbers hard coded from Table 3.2

	2009		2010		2011		2012		2013		2014	
	ADD (gpm)	MDD (gpm)	ADD (gpm)	MDD (gpm)	ADD (gpm)	MDD (gpm)	ADD (gpm)	MDD (gpm)	ADD (gpm)	MDD (gpm)	ADD (gpm)	MDD (gpm)
1	114.0	342.0	119.7	359.1	125.7	377.1	132.0	395.9	138.6	415.7	145.5	436.5
2	50.0	50.0	50.0	50.0	50.0	50.0	50.0	50.0	50.0	50.0	50.0	50.0
3	587.7	1175.4	606.1	1212.2	625.2	1250.4	645.0	1290.1	665.6	1331.2	690.8	1381.7
4	615.0	1353.0	629.0	1383.8	645.0	1419.0	663.0	1458.6	682.0	1500.4	706.0	1553.2
5	22.6	38.4	23.3	39.7	24.2	41.1	25.0	42.6	25.9	44.0	26.8	45.5
SUM	**1389.3**	**2958.9**	**1428.1**	**3044.7**	**1470.1**	**3137.6**	**1515.1**	**3237.2**	**1562.1**	**3341.3**	**1619.1**	**3466.9**
Table 3.2	1356.0	2712.0	1393.0	2787.0	1433.0	2866.0	1477.0	2953.0	1522.0	3043.0	1577.0	3153.0

	2009		2014		2019		2024		2029	
	ADD (gpm)	MDD (gpm)	ADD (gpm)	MDD (gpm)	ADD (gpm)	MDD (gpm)	ADD (gpm)	MDD (gpm)	ADD (gpm)	MDD (gpm)
1	114.0	342.0	145.5	436.5	152.8	458.3	160.4	481.2	168.4	505.3
2	50.0	50.0	50.0	50.0	50.0	50.0	50.0	50.0	50.0	50.0
3	587.7	1175.4	690.8	0.0	825.7	1651.5	994.3	1988.6	1194.7	2389.4
4	615.0	1353.0	706.0	1553.2	838.0	1843.6	995.0	2189.0	1152.0	2534.4
5	22.6	38.4	26.8	45.5	31.8	54.0	32.6	55.5	32.6	55.5
SUM	**1389.3**	**2958.9**	**1619.1**	**2085.2**	**1898.3**	**4057.4**	**2232.3**	**4764.3**	**2597.8**	**5534.6**
Table 3.2	1356.0	2712.0	1577.0	3153.0	1853.0	3706.0	2180.0	4359.0	2548.0	5097.0

PHD

	2009	2010	2011	2012	2013	2014	2019	2024	2029
	PHD (gpm)	PHD (gpm)	PHD (gpm)	PHD (gpm)	PHD (gpm)	PHD (gpm)	PHD (gpm)	PHD (gpm)	PHD (gpm)
1	690.0	718.0	746.0	777.0	808.0	841.0	876.0	912.0	951.0
2	50.0	50.0	50.0	50.0	50.0	50.0	50.0	50.0	50.0
3	1959.0	2017.0	2079.0	2142.0	2208.0	2289.0	2720.0	3260.0	3901.0
4	2289.0	2337.0	2390.0	2451.0	2515.0	2595.0	3037.0	2545.0	4091.0
5	136.0	140.0	143.0	147.0	151.0	154.0	176.0	180.0	180.0
SUM	**5124.0**	**5262.0**	**5408.0**	**5567.0**	**5732.0**	**5929.0**	**6859.0**	**6947.0**	**9173.0**
Table 3.2	4201.0	4315.0	4437.0	4569.0	4706.0	4873.0	5714.0	6706.0	7826.0

Global D Factors	ADD/MDD	EB ADD/PHD	WB ADD/PHD
2009	2	3.33	6.05
2010	2	3.33	6.00
2011	2	3.33	5.94
2012	2	3.32	5.89
2013	2	3.32	5.83
2014	2	3.31	5.78
2019	2	3.29	5.73
2024	2	3.28	5.69
2029	2	3.27	5.65

* 50 gpm assumed max per BBWDSD (RL)

*BBJ Demand 121 to 204 gpm -160 gpm assumed max thru 2" meter.

REVISED 10/15/09

Blaine Water System Hydraulic Model

A – East Blaine

1. 2007 PHD - Basic Model, Existing Pipe System, One pump on at PS 2 and PS 5
2. 2013 PHD – Added 24" Pipe from Peace Portal/Bell Road to approximately 3,830' east of Odell St., two pumps on at PS 2, one pump on at PS 5
3. 2027 PHD – Add 24" pipe from 3,830' east of Odell St to Wellfield, two pumps on at PS 2 and PS 5
4. 2103 MDD - Fire Flow Analysis, two pumps on at PS 2 and PS 5

B – West Blaine

1. 2007 PHD - Basic Model, Existing Pipe System, one pump on at PS 3 and PS 400z (BPS 4R)
2. 2013 PHD – One pump on at PS 4R, two pumps on at PS 3
3. 2027 PHD – One pump on at PS 4R, two pumps on at PS 3
4. 2103 MDD - Fire Flow Analysis

Scenario: WSP Year 2007 (Base)
Steady State Analysis
Junction Report

A1
2007 PHD

Label	Zone	Elevation (ft)	Type	Base Flow (gpm)	Calculated Hydraulic Grade (ft)	Pressure (psi)
J-95	Zone-1	115.00	Demand	0.00	166.22	22.21
J-94	Zone-1	510.00	Demand	0.00	565.03	23.85
J602	320	265.00	Demand	0.00	323.84	25.51
J-35	440	380.00	Demand	2.91	445.41	28.36
J-71	Zone-1	90.00	Demand	0.58	166.22	33.04
J73	1	80.00	Demand	9.03	157.02	33.39
J-36	440	368.00	Demand	1.16	445.41	33.56
J141	1	75.00	Demand	9.03	153.69	34.11
J4	1	80.00	Demand	9.03	160.28	34.80
J730	171	85.00	Demand	6.54	166.10	35.16
J720	171	85.00	Demand	5.81	166.26	35.23
J910	171	42.00	Demand	0.58	125.05	36.01
J140	1	70.00	Demand	9.03	153.69	36.28
J76	1	72.00	Demand	9.03	156.74	36.74
J900	171	40.00	Demand	2.33	125.05	36.87
J-96	Zone-1	40.00	Demand	0.00	125.06	36.87
J3	1	80.00	Demand	9.03	166.74	37.60
J72	1	70.00	Demand	9.03	157.03	37.73
J14	1	72.00	Demand	9.03	159.21	37.81
J218	171	70.00	Demand	2.33	157.53	37.95
J62	171	70.00	Demand	9.03	157.53	37.95
J65	1	70.00	Demand	9.03	157.54	37.95
J10	1	72.00	Demand	6.92	160.20	38.24
J99	2	75.00	Demand	9.03	163.48	38.36
J220	171	72.00	Demand	0.58	160.56	38.39
J74	1	68.00	Demand	9.03	156.76	38.48
J170	1	30.00	Demand	9.03	119.19	38.67
J19	1	65.00	Demand	9.03	154.80	38.93
J890	171	35.00	Demand	2.33	125.05	39.04
J870	171	35.00	Demand	1.74	125.05	39.04
J7	1	35.00	Demand	9.03	125.56	39.26
J15	1	67.00	Demand	9.03	157.63	39.29
J79	1	63.00	Demand	9.03	153.70	39.32
J78	1	63.00	Demand	9.03	153.70	39.32
J61	1	66.00	Demand	6.54	157.15	39.52
BB Supply	1	20.00	Demand	1,535.00	111.49	39.66
J18	1	64.00	Demand	9.03	155.54	39.68
J177	1	75.00	Demand	9.03	166.65	39.73
J142	1	62.00	Demand	9.03	153.70	39.75
J75	1	65.00	Demand	9.03	156.83	39.81
J55	1	62.00	Demand	9.03	153.99	39.88
J70	1	62.00	Demand	9.03	154.00	39.88
J17	1	64.00	Demand	9.03	156.02	39.89
J16	1	65.00	Demand	9.03	157.15	39.95
J13	1	66.00	Demand	9.03	158.50	40.10
J64	1	64.00	Demand	9.03	156.50	40.10
J69	1	62.00	Demand	9.03	154.67	40.17
J20	1	61.00	Demand	9.03	153.97	40.30
J880	171	32.00	Demand	0.58	125.05	40.34
J860	171	32.00	Demand	2.33	125.05	40.34
J71	1	60.00	Demand	9.03	153.97	40.74
J60	1	63.00	Demand	9.03	157.15	40.82

© Haestad Methods, Inc.

Scenario: WSP Year 2007 (Base)
Steady State Analysis
Junction Report

A1

2007 PHD

Label	Zone	Elevation (ft)	Type	Base Flow (gpm)	Calculated Hydraulic Grade (ft)	Pressure (psi)
BB Supply	1	20.00	Demand	1,535.00	111.49	39.66
BBJ Supply	171	25.00	Demand	121.00	124.83	43.28
Blaine - West Supply	171	15.00	Demand	689.00	149.17	58.17
J-24	320	70.00	Demand	8.65	324.86	110.49
J-25	320	40.00	Demand	0.58	324.86	123.49
J-26	320	42.00	Demand	1.16	324.86	122.63
J-27	440	222.00	Demand	0.58	444.60	96.50
J-28	171	240.00	Demand	1.16	444.60	88.70
J-29	440	248.00	Demand	2.91	444.60	85.23
J-30	440	248.00	Demand	1.16	444.60	85.23
J-31	171	258.00	Demand	34.89	444.52	80.86
J-32	440	260.00	Demand	0.58	444.52	80.00
J-33	440	275.00	Demand	0.58	444.52	73.49
J-34	440	287.00	Demand	1.74	445.41	68.67
J-35	440	380.00	Demand	2.91	445.41	28.36
J-36	440	368.00	Demand	1.16	445.41	33.56
J-37	440	276.00	Demand	1.16	445.41	73.44
J-39	320	55.00	Demand	2.91	323.48	116.39
J-40	320	120.00	Demand	34.89	323.60	88.27
J-41	320	70.00	Demand	9.27	323.50	109.90
J-42	320	40.00	Demand	1.74	324.86	123.49
J-43	320	40.00	Demand	0.00	324.86	123.49
J-44	320	40.00	Demand	0.00	324.86	123.49
J-45	320	40.00	Demand	0.00	324.86	123.49
J-46	320	40.00	Demand	0.58	324.86	123.49
J-47	320	40.00	Demand	0.00	324.86	123.49
J-48	320	40.00	Demand	0.58	324.86	123.49
J-49	440	225.00	Demand	0.58	445.24	95.48
J-50	440	150.00	Demand	0.58	441.10	126.20
J-51	440	150.00	Demand	2.33	438.50	125.07
J-52	440	238.00	Demand	6.54	445.36	89.90
J-53	440	245.00	Demand	2.45	445.36	86.86
J-54	440	225.00	Demand	5.72	445.36	95.53
J-55	171	15.00	Demand	1.63	149.48	58.30
J-56	171	15.00	Demand	2.45	149.48	58.30
J-57	171	15.00	Demand	0.82	149.48	58.30
J-58	171	15.00	Demand	0.82	149.48	58.30
J-59	171	15.00	Demand	0.58	149.48	58.30
J-60	171	38.00	Demand	0.58	152.73	49.74
J-61	171	20.00	Demand	1.16	153.70	57.96
J-62	171	20.00	Demand	17.44	153.69	57.96
J-63	320	65.00	Demand	0.58	323.55	112.09
J-64	320	65.00	Demand	0.58	323.55	112.09
J-65	320	110.00	Demand	6.97	323.59	92.60
J-66	320	110.00	Demand	2.33	323.59	92.59
J-67	320	95.00	Demand	1.16	323.58	99.09
J-68	320	95.00	Demand	1.15	323.58	99.09
J-69	Zone-1	100.00	Demand	0.82	323.58	96.93
J-70	Zone-1	90.00	Demand	0.58	324.87	101.82
J-71	Zone-1	90.00	Demand	0.58	166.22	33.04
J-72	171	30.00	Demand	1.16	324.78	127.79
J-73	440	175.00	Demand	0.00	503.78	142.53

© Haestad Methods, Inc.

Scenario: WSP Year 2007 (Base)
Steady State Analysis
Junction Report

A1

Label	Zone	Elevation (ft)	Type	Base Flow (gpm)	Calculated Hydraulic Grade (ft)	Pressure (psi)
J-74	171	20.00	Demand	16.34	150.58	56.61
J-75	171	20.00	Demand	0.58	151.45	56.99
J-76	171	20.00	Demand	0.82	151.45	56.98
J-77	171	20.00	Demand	0.82	151.45	56.99
J-78	171	20.00	Demand	0.82	151.45	56.99
J-79	171	20.00	Demand	2.33	152.13	57.28
J-80	171	20.00	Demand	3.49	152.13	57.28
J-81	171	20.00	Demand	5.24	152.13	57.28
J-82	171	20.00	Demand	2.33	152.14	57.29
J-83	171	20.00	Demand	2.33	152.13	57.28
J-84	171	20.00	Demand	4.65	152.13	57.28
J-85	Zone-1	258.00	Demand	0.00	445.23	81.17
J-86	Zone-1	308.00	Demand	0.00	445.02	59.40
J-88	Zone-1	325.00	Demand	0.00	445.03	52.03
J-89	Zone-1	325.00	Demand	0.00	445.03	52.03
J-90	Zone-1	325.00	Demand	0.00	565.03	104.06
J-91	Zone-1	285.00	Demand	0.00	565.03	121.40
J-92	Zone-1	420.00	Demand	0.00	565.03	62.87
J-93	Zone-1	415.00	Demand	0.00	565.03	65.04
J-94	Zone-1	510.00	Demand	0.00	565.03	23.85
J-95	Zone-1	115.00	Demand	0.00	166.22	22.21
J-96	Zone-1	40.00	Demand	0.00	125.06	36.87
J-97	Zone-1	20.00	Demand	0.00	125.06	45.54
J-100	Zone-1	430.00	Demand	0.00	565.03	58.54
J1	WS	0.00	Demand	0.00	171.00	74.13
J2	WS	0.00	Demand	0.00	170.30	73.83
J3	1	80.00	Demand	9.03	166.74	37.60
J4	1	80.00	Demand	9.03	160.28	34.80
J5	1	50.00	Demand	9.03	151.65	44.07
J6	1	40.00	Demand	9.03	151.32	48.26
J7	1	35.00	Demand	9.03	125.56	39.26
J10	1	72.00	Demand	6.92	160.20	38.24
J11	1	54.00	Demand	9.03	158.23	45.19
J12	1	59.00	Demand	9.03	158.22	43.01
J13	1	66.00	Demand	9.03	158.50	40.10
J14	1	72.00	Demand	9.03	159.21	37.81
J15	1	67.00	Demand	9.03	157.63	39.29
J16	1	65.00	Demand	9.03	157.15	39.95
J17	1	64.00	Demand	9.03	156.02	39.89
J18	1	64.00	Demand	9.03	155.54	39.68
J19	1	65.00	Demand	9.03	154.80	38.93
J20	1	61.00	Demand	9.03	153.97	40.30
J21	1	50.00	Demand	9.03	152.42	44.40
J22	1	35.00	Demand	9.03	152.16	50.79
J23	1	35.00	Demand	9.03	151.98	50.71
J24	1	35.00	Demand	9.03	150.58	50.11
J25	171	15.00	Demand	38.44	149.48	58.30
J26	1	52.00	Demand	9.03	155.14	44.71
J27	1	50.00	Demand	9.03	154.07	45.12
J28	1	50.00	Demand	9.03	153.59	44.91
J29	1	55.00	Demand	9.03	153.46	42.68
J30	1	56.00	Demand	9.03	154.87	42.86

© Haestad Methods, Inc.

Scenario: WSP Year 2007 (Base)
Steady State Analysis
Junction Report

A1

Label	Zone	Elevation (ft)	Type	Base Flow (gpm)	Calculated Hydraulic Grade (ft)	Pressure (psi)
J31	1	55.00	Demand	9.03	158.00	44.65
J32	1	55.00	Demand	9.03	157.72	44.53
J33	1	50.00	Demand	9.03	156.51	46.18
J34	1	52.00	Demand	9.03	153.28	43.91
J35	1	53.00	Demand	8.65	153.09	43.39
J36	1	54.00	Demand	9.03	152.93	42.89
J37	1	53.00	Demand	9.03	152.82	43.28
J38	1	50.00	Demand	9.03	152.77	44.55
J39	1	50.00	Demand	9.03	152.77	44.55
J40	1	55.00	Demand	9.03	152.85	42.42
J41	1	53.00	Demand	9.03	152.81	43.27
J42	1	56.00	Demand	9.03	153.13	42.11
J43	1	43.00	Demand	9.03	152.66	47.54
J44	1	51.00	Demand	9.03	152.71	44.09
J45	1	51.00	Demand	9.03	152.74	44.11
J46	1	47.00	Demand	9.03	152.76	45.85
J47	1	43.00	Demand	9.03	152.54	47.49
J48	1	48.00	Demand	9.03	152.51	45.31
J49	1	40.00	Demand	9.03	152.39	48.72
J50	1	47.00	Demand	9.03	152.44	45.71
J51	1	35.00	Demand	9.03	152.25	50.83
J52	1	35.00	Demand	9.03	152.04	50.74
J53	1	45.00	Demand	9.03	152.29	46.51
J54	1	52.00	Demand	9.03	152.99	43.78
J55	1	62.00	Demand	9.03	153.99	39.88
J56	1	58.00	Demand	9.03	154.19	41.70
J57	1	51.00	Demand	9.03	154.32	44.79
J58	1	60.00	Demand	9.03	156.23	41.72
J59	1	57.00	Demand	9.03	156.66	43.21
J60	1	63.00	Demand	9.03	157.15	40.82
J61	1	66.00	Demand	6.54	157.15	39.52
J62	171	70.00	Demand	9.03	157.53	37.95
J63	1	20.00	Demand	9.03	152.17	57.30
J64	1	64.00	Demand	9.03	156.50	40.10
J65	1	70.00	Demand	9.03	157.54	37.95
J66	1	60.00	Demand	9.03	156.51	41.84
J67	1	55.00	Demand	9.03	154.31	43.05
J68	1	60.00	Demand	9.03	154.82	41.11
J69	1	62.00	Demand	9.03	154.67	40.17
J70	1	62.00	Demand	9.03	154.00	39.88
J71	1	60.00	Demand	9.03	153.97	40.74
J72	1	70.00	Demand	9.03	157.03	37.73
J73	1	80.00	Demand	9.03	157.02	33.39
J74	1	68.00	Demand	9.03	156.76	38.48
J75	1	65.00	Demand	9.03	156.83	39.81
J76	1	72.00	Demand	9.03	156.74	36.74
J77	1	60.00	Demand	9.03	156.02	41.63
J78	1	63.00	Demand	9.03	153.70	39.32
J79	1	63.00	Demand	9.03	153.70	39.32
J80	2	160.00	Demand	4.65	323.83	71.02
J81	171	130.00	Demand	0.58	323.62	83.94
J82	171	125.00	Demand	0.58	323.60	86.10

Scenario: WSP Year 2007 (Base)
Steady State Analysis
Junction Report

A1

Label	Zone	Elevation (ft)	Type	Base Flow (gpm)	Calculated Hydraulic Grade (ft)	Pressure (psi)
J83	2	110.00	Demand	6.54	323.58	92.59
J84	2	65.00	Demand	6.54	323.54	112.08
J85	2	100.00	Demand	6.54	323.50	96.89
J86	2	102.00	Demand	6.54	323.49	96.02
J87	2	95.00	Demand	6.54	323.49	99.05
J88	2	80.00	Demand	6.54	323.48	105.55
J89	2	60.00	Demand	6.54	323.48	114.22
J91	2	70.00	Demand	6.54	323.49	109.89
J92	2	85.00	Demand	6.54	323.49	103.39
J93	2	100.00	Demand	9.03	323.50	96.89
J99	2	75.00	Demand	9.03	163.48	38.36
J100	3	250.00	Demand	7.21	445.08	84.57
J101	3	260.00	Demand	7.21	445.06	80.23
J102	440	290.00	Demand	7.21	445.01	67.20
J103	440	280.00	Demand	2.33	444.79	71.44
J104	3	255.00	Demand	7.21	445.10	82.41
J105	440	260.00	Demand	7.21	445.11	80.25
J106	440	205.00	Demand	2.33	445.08	104.08
J107	3	275.00	Demand	7.21	445.49	73.91
J108	440	325.00	Demand	7.21	445.03	52.03
J140	1	70.00	Demand	9.03	153.69	36.28
J141	1	75.00	Demand	9.03	153.69	34.11
J142	1	62.00	Demand	9.03	153.70	39.75
J143	1	55.00	Demand	9.03	151.45	41.82
J144	1	58.00	Demand	9.03	153.25	41.29
J145	1	58.00	Demand	9.03	153.25	41.29
J146	1	56.00	Demand	9.03	152.47	41.82
J147	1	56.00	Demand	9.03	152.96	42.04
J148	1	55.00	Demand	9.03	152.98	42.48
J149	1	56.00	Demand	9.03	152.97	42.04
J150	1	53.00	Demand	9.03	152.73	43.23
J151	1	52.00	Demand	9.03	152.43	43.54
J152	1	52.00	Demand	9.03	152.42	43.53
J153	1	50.00	Demand	9.03	152.41	44.40
J154	1	52.00	Demand	9.03	153.33	43.93
J155	1	35.00	Demand	9.03	152.24	50.83
J156	1	53.00	Demand	9.03	154.30	43.92
J157	1	53.00	Demand	9.03	154.19	43.87
J158	1	50.00	Demand	9.03	154.88	45.47
J159	1	50.00	Demand	9.03	156.37	46.11
J160	1	57.00	Demand	13.84	157.08	43.39
J161	1	56.00	Demand	9.03	157.53	44.01
J162	1	50.00	Demand	9.03	157.70	46.69
J163	1	50.00	Demand	9.03	156.21	46.04
J164	1	50.00	Demand	9.03	158.07	46.85
J165	1	45.00	Demand	9.03	154.38	47.42
J166	1	53.00	Demand	9.03	152.79	43.26
J167	1	30.00	Demand	9.03	153.46	53.52
J168	1	20.00	Demand	9.03	152.13	57.28
J169	171	20.00	Demand	9.03	152.13	57.28
J170	1	30.00	Demand	9.03	119.19	38.67
J171	1	20.00	Demand	9.03	119.18	43.00

Scenario: WSP Year 2007 (Base)
Steady State Analysis
Junction Report

A1

Label	Zone	Elevation (ft)	Type	Base Flow (gpm)	Calculated Hydraulic Grade (ft)	Pressure (psi)
J172	1	30.00	Demand	9.03	125.26	41.30
J173	171	30.00	Demand	0.58	125.08	41.22
J174	1	50.00	Demand	9.03	153.05	44.67
J175	1	50.00	Demand	9.03	155.36	45.68
J176	1	65.00	Demand	9.03	163.84	42.85
J177	1	75.00	Demand	9.03	166.65	39.73
J178	1	45.00	Demand	9.03	160.27	49.97
J179	1	80.00	Demand	9.03	324.87	106.16
J180	320	145.00	Demand	0.00	370.32	97.68
J181	320	145.00	Demand	0.00	325.06	78.06
J182	2	165.00	Demand	6.54	324.02	68.94
J183	320	175.00	Demand	0.00	323.98	64.59
J184	3	185.00	Demand	7.21	445.09	112.76
J185	320	135.00	Demand	6.54	323.62	81.77
J186	2	135.00	Demand	4.07	323.70	81.80
J187	320	115.00	Demand	4.65	323.60	90.43
J188	2	115.00	Demand	6.54	323.59	90.43
J189	2	130.00	Demand	6.54	323.60	83.93
J190	2	105.00	Demand	6.54	323.58	94.76
J191	2	110.00	Demand	6.54	323.58	92.59
J192	2	95.00	Demand	6.54	323.58	99.09
J193	2	100.00	Demand	6.54	323.58	96.93
J194	2	95.00	Demand	6.54	323.51	99.06
J195	2	125.00	Demand	6.54	323.56	86.08
J196	2	80.00	Demand	6.54	323.56	105.59
J197	2	95.00	Demand	6.54	324.88	99.66
J198	2	90.00	Demand	6.54	324.87	101.82
J199	2	75.00	Demand	6.54	324.87	108.32
J200	2	73.00	Demand	6.54	324.87	109.19
J201	2	72.00	Demand	6.54	324.87	109.62
J202	2	80.00	Demand	6.54	324.87	106.16
J203	2	80.00	Demand	6.54	324.87	106.15
J204	2	70.00	Demand	6.54	324.87	110.49
J205	2	80.00	Demand	6.54	324.87	106.15
J206	2	150.00	Demand	6.54	324.88	75.81
J207	3	245.00	Demand	7.21	445.08	86.74
J208	440	255.00	Demand	4.65	444.61	82.20
J209	3	300.00	Demand	7.21	445.02	62.87
J210	440	285.00	Demand	3.49	445.41	69.54
J211	2	135.00	Demand	1.74	445.41	134.57
J212	3	255.00	Demand	7.54	445.37	82.53
J213	440	175.00	Demand	5.81	445.08	117.08
J214	440	140.00	Demand	3.49	445.07	132.26
J215	2	135.00	Demand	7.21	445.05	134.41
J216	440	110.00	Demand	5.24	445.04	145.25
J217	WS	0.00	Demand	0.00	169.34	73.41
J218	171	70.00	Demand	2.33	157.53	37.95
J219	2	70.00	Demand	0.58	323.48	109.89
J220	171	72.00	Demand	0.58	160.56	38.39
J221	440	130.00	Demand	6.54	445.04	136.58
J222	440	287.00	Demand	0.00	445.41	68.67
J400	3	275.00	Demand	7.21	445.01	73.70

© Haeslad Methods, Inc.

Scenario: WSP Year 2007 (Base)
Steady State Analysis
Junction Report

A1

Label	Zone	Elevation (ft)	Type	Base Flow (gpm)	Calculated Hydraulic Grade (ft)	Pressure (psi)
J402	3	310.00	Demand	7.21	445.35	58.68
J403	3	215.00	Demand	4.81	445.08	99.75
J404	320	175.00	Demand	0.58	445.08	117.09
J501	1	30.00	Demand	9.03	152.10	52.93
J502	1	20.00	Demand	9.03	153.25	57.77
J503	1	35.00	Demand	9.03	153.55	51.39
J504	1	35.00	Demand	9.03	153.57	51.40
J505	1	50.00	Demand	9.03	153.79	45.00
J506	1	40.00	Demand	9.03	153.57	49.24
J507	1	55.00	Demand	9.03	153.25	42.59
J508	1	55.00	Demand	9.03	153.51	42.71
J509	1	55.00	Demand	9.03	153.51	42.71
J510	1	52.00	Demand	9.03	157.08	45.56
J511	1	48.00	Demand	9.03	152.73	45.40
J512	1	56.00	Demand	9.03	153.10	42.10
J513	1	48.00	Demand	9.03	152.78	45.42
J514	1	51.00	Demand	9.03	152.78	44.12
J515	1	52.00	Demand	9.03	152.78	43.69
J516	1	48.00	Demand	9.03	152.76	45.42
J517	1	46.00	Demand	9.03	152.70	46.26
J518	1	52.00	Demand	9.03	152.72	43.66
J519	1	52.00	Demand	9.03	152.78	43.69
J520	1	48.00	Demand	9.03	152.83	45.45
J602	320	265.00	Demand	0.00	323.84	25.51
J604	well 8	0.00	Demand	0.00	170.53	73.93
J610	99	50.00	Demand	0.58	166.22	50.39
J611	2	50.00	Demand	9.27	165.59	50.11
J612	171	50.00	Demand	4.65	167.78	51.06
J700	171	50.00	Demand	4.07	166.57	50.54
J710	171	62.00	Demand	4.65	166.51	45.31
J720	171	85.00	Demand	5.81	166.26	35.23
J730	171	85.00	Demand	6.54	166.10	35.16
J740	171	70.00	Demand	7.54	166.01	41.62
J750	Zone-1	30.00	Demand	0.72	165.98	58.95
J760	171	64.00	Demand	2.33	165.98	44.21
J770	171	60.00	Demand	6.39	165.97	45.94
J780	171	40.00	Demand	4.65	166.48	54.83
J790	171	45.00	Demand	3.49	166.48	52.66
J795	171	45.00	Demand	0.58	166.48	52.66
J800	171	30.00	Demand	0.58	125.07	41.22
J810	171	25.00	Demand	0.58	125.07	43.38
J820	171	25.00	Demand	2.33	125.06	43.38
J830	171	30.00	Demand	1.74	125.06	41.21
J840	171	30.00	Demand	1.16	125.06	41.21
J860	171	32.00	Demand	2.33	125.05	40.34
J870	171	35.00	Demand	1.74	125.05	39.04
J880	171	32.00	Demand	0.58	125.05	40.34
J890	171	35.00	Demand	2.33	125.05	39.04
J900	171	40.00	Demand	2.33	125.05	36.87
J910	171	42.00	Demand	0.58	125.05	36.01

Scenario: WSP Year 2007 (Base)
Steady State Analysis
Pump Report

A1

Label	Elevation (ft)	Shutoff Head (ft)	Shutoff Discharge (gpm)	Design Head (ft)	Design Discharge (gpm)	Maximum Operating Head (ft)	Maximum Operating Discharge (gpm)	Control Status	Intake Pump Grade (ft)	Discharge Pump Grade (ft)	Discharge (gpm)	Pump Head (ft)
PS2-1	0.00	180.00	0.00	140.00	150.00	80.00	220.00	Off	323.98	503.78	0.00	0.00
PS2-2	0.00	180.00	0.00	140.00	150.00	80.00	220.00	On	323.98	503.78	16.28	179.80
PS5-1	0.00	220.00	0.00	175.00	550.00	150.00	740.00	Off	170.53	370.32	0.00	0.00
PS5-2	0.00	220.00	0.00	175.00	550.00	150.00	740.00	On	170.52	370.32	321.21	199.80
PS6-1	350.00	120.00	0.00	90.00	500.00	0.00	1,000.00	On	445.03	565.03	0.00	120.00
Well 8 P	0.00	48.00	0.00	36.00	100.00	0.00	200.00	On	135.00	170.53	101.96	35.53
Well 9 P	0.00	386.67	0.00	290.00	200.00	0.00	400.00	On	149.84	446.49	192.99	296.66

© Haestad Methods, Inc.

Scenario: WSP Year 2007 (Base)
Steady State Analysis
Tank Report

A1

Label	Zone	Base Elevation (ft)	Minimum Elevation (ft)	Initial HGL (ft)	Maximum Elevation (ft)	Inactive Volume (gal)	Tank Diameter (ft)	Inflow (gpm)	Current Status	Calculated Hydraulic Grade (ft)	Calculated Percent Full (%)
171 RES (LF	1	135.00	153.00	171.00	171.00	0.00	80.00	-1,607.62	Draining	171.00	100.0
320 RES	2	296.00	306.00	320.00	320.00	0.00	27.00	0.00	Full	320.00	100.0
440 RES	3	360.00	430.00	440.00	440.00	0.00	50.00	0.00	Full	440.00	100.0
T-1	WS	150.00	157.00	171.00	171.00	0.00	90.00	-2,343.22	Draining	171.00	100.0

© Haestad Methods, Inc.
CHS Engineers Inc
37 Brookside Road Waterbury, CT 06708 USA +1-203-755-1666

Scenario: WSP Year 2007 (Base)
Steady State Analysis
Valve Report

A1

Label	Elevation (ft)	Initial Pressure (psi)	Initial HGL (ft)	Diameter (in)	Control Status	Discharge (gpm)	From HGL (ft)	To HGL (ft)	Headloss (ft)
PRV-1	160.00	4.77	171.00	6.0	Closed	0.00	445.08	324.88	0.00
PRV-2	275.00	15.18	310.00	6.0	Closed	0.00	445.01	323.84	0.00
PRV-5	145.00	78.06	325.00	6.0	Throttling	321.21	370.32	325.06	45.25
PRV-6	175.00	117.09	445.00	6.0	Throttling	16.28	503.78	445.10	58.68

Scenario: WSP Year 2013
Steady State Analysis
Junction Report

A2
2013 PHD

Label	Zone	Elevation (ft)	Type	Base Flow (gpm)	Calculated Hydraulic Grade (ft)	Pressure (psi)
J-94	Zone-1	510.00	Demand	0.00	556.99	20.37
J-95	Zone-1	115.00	Demand	0.00	164.48	21.45
J602	320	265.00	Demand	0.00	321.10	24.32
J-35	440	380.00	Demand	3.66	441.08	26.48
J4	1	80.00	Demand	11.38	150.38	30.51
J73	1	80.00	Demand	11.38	152.05	31.23
J141	1	75.00	Demand	11.38	147.41	31.39
J-36	440	368.00	Demand	1.46	441.08	31.68
J-71	Zone-1	90.00	Demand	0.73	164.48	32.29
J730	171	85.00	Demand	8.23	161.90	33.34
J720	171	85.00	Demand	7.32	162.15	33.45
J140	1	70.00	Demand	11.38	147.42	33.56
J76	1	72.00	Demand	11.38	151.67	34.54
J72	1	70.00	Demand	11.38	152.07	35.58
J218	171	70.00	Demand	2.93	152.77	35.88
J62	171	70.00	Demand	11.38	152.77	35.88
J65	1	70.00	Demand	11.38	152.78	35.89
J3	1	80.00	Demand	11.38	162.88	35.93
J14	1	72.00	Demand	11.38	155.11	36.03
J74	1	68.00	Demand	11.38	151.69	36.28
J19	1	65.00	Demand	11.38	148.96	36.40
J79	1	63.00	Demand	11.38	147.43	36.60
J78	1	63.00	Demand	11.38	147.44	36.61
J10	1	72.00	Demand	8.71	156.58	36.67
J220	171	72.00	Demand	0.73	157.05	36.87
J142	1	62.00	Demand	11.38	147.42	37.03
J55	1	62.00	Demand	11.38	147.84	37.21
J70	1	62.00	Demand	11.38	147.85	37.22
J15	1	67.00	Demand	11.38	152.90	37.24
J99	2	75.00	Demand	11.38	160.95	37.26
J18	1	64.00	Demand	11.38	150.00	37.28
J61	1	66.00	Demand	8.23	152.25	37.39
J-101	1	60.00	Demand	0.00	146.36	37.44
J17	1	64.00	Demand	11.38	150.68	37.58
J69	1	62.00	Demand	11.38	148.79	37.63
J75	1	65.00	Demand	11.38	151.80	37.63
J20	1	61.00	Demand	11.38	147.81	37.63
J16	1	65.00	Demand	11.38	152.24	37.82
J64	1	64.00	Demand	11.38	151.35	37.87
J177	1	75.00	Demand	11.38	162.74	38.04
J71	1	60.00	Demand	11.38	147.81	38.07
J13	1	66.00	Demand	11.38	154.25	38.26
J145	1	58.00	Demand	11.38	146.81	38.50
J144	1	58.00	Demand	11.38	146.81	38.50
J68	1	60.00	Demand	11.38	149.01	38.59
J143	1	55.00	Demand	11.38	144.17	38.66
J60	1	63.00	Demand	11.38	152.24	38.69
J146	1	56.00	Demand	11.38	145.73	38.90
J56	1	58.00	Demand	11.38	148.14	39.08
J147	1	56.00	Demand	11.38	146.41	39.19
J149	1	56.00	Demand	11.38	146.41	39.20
J77	1	60.00	Demand	11.38	150.67	39.31

© Haestad Methods, Inc.

Scenario: WSP Year 2013
Steady State Analysis
Junction Report

A2
2013 PHD

Label	Zone	Elevation (ft)	Type	Base Flow (gpm)	Calculated Hydraulic Grade (ft)	Pressure (psi)
BB Supply	1	20.00	Demand	1,848.00	125.68	45.81
BBJ Supply	171	25.00	Demand	140.00	144.57	51.84
Blaine - West Supply	171	15.00	Demand	858.00	140.84	54.55
J-24	320	70.00	Demand	10.89	324.76	110.44
J-25	320	40.00	Demand	0.73	324.75	123.45
J-26	320	42.00	Demand	1.46	324.75	122.58
J-27	440	222.00	Demand	0.73	439.41	94.25
J-28	171	240.00	Demand	1.46	439.41	86.45
J-29	440	248.00	Demand	3.66	439.40	82.98
J-30	440	248.00	Demand	1.46	439.40	82.98
J-31	171	258.00	Demand	43.94	439.28	78.59
J-32	440	260.00	Demand	0.73	439.28	77.72
J-33	440	275.00	Demand	0.73	439.28	71.22
J-34	440	287.00	Demand	2.20	441.08	66.80
J-35	440	380.00	Demand	3.66	441.08	26.48
J-36	440	368.00	Demand	1.46	441.08	31.68
J-37	440	276.00	Demand	1.46	441.08	71.57
J-39	320	55.00	Demand	3.66	320.66	115.17
J-40	320	120.00	Demand	43.94	320.86	87.08
J-41	320	70.00	Demand	11.68	320.69	108.68
J-42	320	40.00	Demand	2.20	324.75	123.45
J-43	320	40.00	Demand	0.00	324.75	123.45
J-44	320	40.00	Demand	0.00	324.75	123.45
J-45	320	40.00	Demand	0.00	324.75	123.45
J-46	320	40.00	Demand	0.73	324.75	123.45
J-47	320	40.00	Demand	0.00	324.75	123.45
J-48	320	40.00	Demand	0.73	324.75	123.45
J-49	440	225.00	Demand	0.73	440.90	93.60
J-50	440	150.00	Demand	0.73	434.56	123.36
J-51	440	150.00	Demand	2.93	430.57	121.63
J-52	440	238.00	Demand	8.23	441.23	88.10
J-53	440	245.00	Demand	3.09	441.23	85.07
J-54	440	225.00	Demand	7.20	441.22	93.74
J-55	171	15.00	Demand	2.06	141.31	54.76
J-56	171	15.00	Demand	3.09	141.31	54.76
J-57	171	15.00	Demand	1.03	141.30	54.75
J-58	171	15.00	Demand	1.03	141.30	54.76
J-59	171	15.00	Demand	0.73	141.30	54.76
J-60	171	38.00	Demand	0.73	147.29	47.38
J-61	171	20.00	Demand	1.46	148.25	55.60
J-62	171	20.00	Demand	21.97	148.24	55.59
J-63	320	65.00	Demand	0.73	320.77	110.88
J-64	320	65.00	Demand	0.73	320.77	110.88
J-65	320	110.00	Demand	8.78	320.83	91.40
J-66	320	110.00	Demand	2.93	320.83	91.40
J-67	320	95.00	Demand	1.46	320.82	97.90
J-68	320	95.00	Demand	1.45	320.81	97.89
J-69	Zone-1	100.00	Demand	1.03	320.81	95.73
J-70	Zone-1	90.00	Demand	0.73	324.77	101.78
J-71	Zone-1	90.00	Demand	0.73	164.48	32.29
J-72	171	30.00	Demand	1.46	324.62	127.72
J-73	440	175.00	Demand	0.00	490.48	136.77

Scenario: WSP Year 2013
Steady State Analysis
Junction Report

A2

Label	Zone	Elevation (ft)	Type	Base Flow (gpm)	Calculated Hydraulic Grade (ft)	Pressure (psi)
J-74	171	20.00	Demand	20.58	142.95	53.30
J-75	171	20.00	Demand	0.73	144.27	53.88
J-76	171	20.00	Demand	1.03	144.26	53.87
J-77	171	20.00	Demand	1.03	144.27	53.87
J-78	171	20.00	Demand	1.03	144.27	53.87
J-79	171	20.00	Demand	2.93	146.65	54.90
J-80	171	20.00	Demand	4.39	146.65	54.90
J-81	171	20.00	Demand	6.60	146.65	54.90
J-82	171	20.00	Demand	2.93	146.66	54.91
J-83	171	20.00	Demand	2.93	146.64	54.90
J-84	171	20.00	Demand	5.86	146.64	54.90
J-85	Zone-1	258.00	Demand	0.00	441.22	79.43
J-86	Zone-1	308.00	Demand	0.00	440.02	57.24
J-88	Zone-1	325.00	Demand	0.00	440.00	49.85
J-89	Zone-1	325.00	Demand	0.00	439.90	49.81
J-90	Zone-1	325.00	Demand	0.00	557.53	100.81
J-91	Zone-1	285.00	Demand	0.00	557.44	118.11
J-92	Zone-1	420.00	Demand	0.00	557.06	59.42
J-93	Zone-1	415.00	Demand	138.60	556.99	61.55
J-94	Zone-1	510.00	Demand	0.00	556.99	20.37
J-95	Zone-1	115.00	Demand	0.00	164.48	21.45
J-96	Zone-1	40.00	Demand	0.00	144.85	45.46
J-97	Zone-1	20.00	Demand	0.00	144.85	54.13
J-100	Zone-1	430.00	Demand	0.00	557.11	55.10
J-101	1	60.00	Demand	0.00	146.36	37.44
J1	WS	0.00	Demand	0.00	170.99	74.13
J2	WS	0.00	Demand	0.00	170.06	73.73
J3	1	80.00	Demand	11.38	162.88	35.93
J4	1	80.00	Demand	11.38	150.38	30.51
J5	1	50.00	Demand	11.38	145.99	41.61
J6	1	40.00	Demand	11.38	145.92	45.92
J7	1	35.00	Demand	11.38	145.54	47.92
J10	1	72.00	Demand	8.71	156.58	36.67
J11	1	54.00	Demand	11.38	153.95	43.33
J12	1	59.00	Demand	11.38	153.92	41.15
J13	1	66.00	Demand	11.38	154.25	38.26
J14	1	72.00	Demand	11.38	155.11	36.03
J15	1	67.00	Demand	11.38	152.90	37.24
J16	1	65.00	Demand	11.38	152.24	37.82
J17	1	64.00	Demand	11.38	150.68	37.58
J18	1	64.00	Demand	11.38	150.00	37.28
J19	1	65.00	Demand	11.38	148.96	36.40
J20	1	61.00	Demand	11.38	147.81	37.63
J21	1	50.00	Demand	11.38	145.66	41.47
J22	1	35.00	Demand	11.38	145.30	47.82
J23	1	35.00	Demand	11.38	145.06	47.71
J24	1	35.00	Demand	11.38	142.97	46.81
J25	171	15.00	Demand	48.42	141.31	54.76
J26	1	52.00	Demand	11.38	149.99	42.48
J27	1	50.00	Demand	11.38	148.58	42.74
J28	1	50.00	Demand	11.38	147.94	42.46
J29	1	55.00	Demand	11.38	147.66	40.17

Scenario: WSP Year 2013
Steady State Analysis
Junction Report

A2

Label	Zone	Elevation (ft)	Type	Base Flow (gpm)	Calculated Hydraulic Grade (ft)	Pressure (psi)
J30	1	56.00	Demand	11.38	149.47	40.52
J31	1	55.00	Demand	11.38	153.61	42.75
J32	1	55.00	Demand	11.38	153.21	42.57
J33	1	50.00	Demand	11.38	151.51	44.01
J34	1	52.00	Demand	11.38	147.32	41.32
J35	1	53.00	Demand	10.89	147.00	40.75
J36	1	54.00	Demand	11.38	146.70	40.19
J37	1	53.00	Demand	11.38	146.52	40.54
J38	1	50.00	Demand	11.38	146.42	41.80
J39	1	50.00	Demand	11.38	146.42	41.80
J40	1	55.00	Demand	11.38	146.58	39.70
J41	1	53.00	Demand	11.38	146.52	40.54
J42	1	56.00	Demand	11.38	147.07	39.48
J43	1	43.00	Demand	11.38	146.23	44.75
J44	1	51.00	Demand	11.38	146.30	41.31
J45	1	51.00	Demand	11.38	146.34	41.33
J46	1	47.00	Demand	11.38	146.37	43.08
J47	1	43.00	Demand	11.38	146.02	44.66
J48	1	48.00	Demand	11.38	145.97	42.47
J49	1	40.00	Demand	11.38	145.77	45.85
J50	1	47.00	Demand	11.38	145.85	42.85
J51	1	35.00	Demand	11.38	145.52	47.91
J52	1	35.00	Demand	11.38	145.17	47.76
J53	1	45.00	Demand	11.38	145.50	43.57
J54	1	52.00	Demand	11.38	146.44	40.94
J55	1	62.00	Demand	11.38	147.84	37.21
J56	1	58.00	Demand	11.38	148.14	39.08
J57	1	51.00	Demand	11.38	148.36	42.21
J58	1	60.00	Demand	11.38	151.02	39.46
J59	1	57.00	Demand	11.38	151.57	41.00
J60	1	63.00	Demand	11.38	152.24	38.69
J61	1	66.00	Demand	8.23	152.25	37.39
J62	171	70.00	Demand	11.38	152.77	35.88
J63	1	20.00	Demand	11.38	146.68	54.92
J64	1	64.00	Demand	11.38	151.35	37.87
J65	1	70.00	Demand	11.38	152.78	35.89
J66	1	60.00	Demand	11.38	151.36	39.61
J67	1	55.00	Demand	11.38	148.32	40.46
J68	1	60.00	Demand	11.38	149.01	38.59
J69	1	62.00	Demand	11.38	148.79	37.63
J70	1	62.00	Demand	11.38	147.85	37.22
J71	1	60.00	Demand	11.38	147.81	38.07
J72	1	70.00	Demand	11.38	152.07	35.58
J73	1	80.00	Demand	11.38	152.05	31.23
J74	1	68.00	Demand	11.38	151.69	36.28
J75	1	65.00	Demand	11.38	151.80	37.63
J76	1	72.00	Demand	11.38	151.67	34.54
J77	1	60.00	Demand	11.38	150.67	39.31
J78	1	63.00	Demand	11.38	147.44	36.61
J79	1	63.00	Demand	11.38	147.43	36.60
J80	2	160.00	Demand	5.86	321.24	69.90
J81	171	130.00	Demand	0.73	320.88	82.75

Scenario: WSP Year 2013
Steady State Analysis
Junction Report

A2

Label	Zone	Elevation (ft)	Type	Base Flow (gpm)	Calculated Hydraulic Grade (ft)	Pressure (psi)
J82	171	125.00	Demand	0.73	320.84	84.90
J83	2	110.00	Demand	8.23	320.82	91.39
J84	2	65.00	Demand	8.23	320.75	110.87
J85	2	100.00	Demand	8.23	320.69	95.67
J86	2	102.00	Demand	8.23	320.67	94.80
J87	2	95.00	Demand	8.23	320.67	97.83
J88	2	80.00	Demand	8.23	320.66	104.33
J89	2	60.00	Demand	8.23	320.66	113.00
J91	2	70.00	Demand	8.23	320.67	108.67
J92	2	85.00	Demand	8.23	320.67	102.17
J93	2	100.00	Demand	11.38	320.69	95.67
J99	2	75.00	Demand	11.38	160.95	37.26
J100	3	250.00	Demand	9.08	441.37	82.96
J101	3	260.00	Demand	9.08	441.03	78.48
J102	440	290.00	Demand	9.08	440.03	65.04
J103	440	280.00	Demand	2.93	439.69	69.23
J104	3	255.00	Demand	9.08	441.20	80.72
J105	440	260.00	Demand	9.08	441.20	78.55
J106	440	205.00	Demand	2.93	441.17	102.39
J107	3	275.00	Demand	9.08	441.29	72.09
J108	440	325.00	Demand	9.08	440.02	49.86
J140	1	70.00	Demand	11.38	147.42	33.56
J141	1	75.00	Demand	11.38	147.41	31.39
J142	1	62.00	Demand	11.38	147.42	37.03
J143	1	55.00	Demand	11.38	144.17	38.66
J144	1	58.00	Demand	11.38	146.81	38.50
J145	1	58.00	Demand	11.38	146.81	38.50
J146	1	56.00	Demand	11.38	145.73	38.90
J147	1	56.00	Demand	11.38	146.41	39.19
J148	1	55.00	Demand	11.38	146.43	39.64
J149	1	56.00	Demand	11.38	146.41	39.20
J150	1	53.00	Demand	11.38	146.09	40.35
J151	1	52.00	Demand	11.38	145.67	40.61
J152	1	52.00	Demand	11.38	145.66	40.60
J153	1	50.00	Demand	11.38	145.65	41.47
J154	1	52.00	Demand	11.38	146.91	41.15
J155	1	35.00	Demand	11.38	145.51	47.91
J156	1	53.00	Demand	11.38	148.32	41.32
J157	1	53.00	Demand	11.38	148.14	41.24
J158	1	50.00	Demand	11.38	149.48	43.13
J159	1	50.00	Demand	11.38	151.27	43.90
J160	1	57.00	Demand	17.43	152.30	41.31
J161	1	56.00	Demand	11.38	152.93	42.02
J162	1	50.00	Demand	11.38	153.18	44.73
J163	1	50.00	Demand	11.38	151.23	43.89
J164	1	50.00	Demand	11.38	153.75	44.98
J165	1	45.00	Demand	11.38	148.99	45.08
J166	1	53.00	Demand	11.38	146.49	40.53
J167	1	30.00	Demand	11.38	147.88	51.10
J168	1	20.00	Demand	11.38	146.64	54.90
J169	171	20.00	Demand	11.38	146.64	54.90
J170	1	30.00	Demand	11.38	136.55	46.19

Scenario: WSP Year 2013
Steady State Analysis
Junction Report

A2

Label	Zone	Elevation (ft)	Type	Base Flow (gpm)	Calculated Hydraulic Grade (ft)	Pressure (psi)
J171	1	20.00	Demand	11.38	136.52	50.52
J172	1	30.00	Demand	11.38	145.14	49.91
J173	171	30.00	Demand	0.73	144.88	49.80
J174	1	50.00	Demand	11.38	146.03	41.63
J175	1	50.00	Demand	11.38	146.19	41.70
J176	1	65.00	Demand	11.38	157.27	40.00
J177	1	75.00	Demand	11.38	162.74	38.04
J178	1	45.00	Demand	11.38	150.36	45.67
J179	1	80.00	Demand	11.38	324.77	106.11
J180	320	145.00	Demand	0.00	344.32	86.41
J181	320	145.00	Demand	0.00	325.06	78.06
J182	2	165.00	Demand	8.23	321.57	67.88
J183	320	175.00	Demand	0.00	321.25	63.40
J184	3	185.00	Demand	9.08	444.74	112.60
J185	320	135.00	Demand	8.23	320.87	80.58
J186	2	135.00	Demand	5.13	321.02	80.64
J187	320	115.00	Demand	5.86	320.84	89.24
J188	2	115.00	Demand	8.23	320.82	89.23
J189	2	130.00	Demand	8.23	320.84	82.73
J190	2	105.00	Demand	8.23	320.81	93.56
J191	2	110.00	Demand	8.23	320.81	91.39
J192	2	95.00	Demand	8.23	320.81	97.89
J193	2	100.00	Demand	8.23	320.81	95.72
J194	2	95.00	Demand	8.23	320.70	97.85
J195	2	125.00	Demand	8.23	320.78	84.88
J196	2	80.00	Demand	8.23	320.78	104.38
J197	2	95.00	Demand	8.23	324.78	99.61
J198	2	90.00	Demand	8.23	324.77	101.78
J199	2	75.00	Demand	8.23	324.76	108.28
J200	2	73.00	Demand	8.23	324.76	109.14
J201	2	72.00	Demand	8.23	324.76	109.58
J202	2	80.00	Demand	8.23	324.76	106.11
J203	2	80.00	Demand	8.23	324.76	106.11
J204	2	70.00	Demand	8.23	324.76	110.44
J205	2	80.00	Demand	8.23	324.76	106.11
J206	2	150.00	Demand	8.23	324.78	75.77
J207	3	245.00	Demand	9.08	441.21	85.06
J208	440	255.00	Demand	5.86	439.41	79.94
J209	3	300.00	Demand	9.08	440.01	60.70
J210	440	285.00	Demand	4.39	441.08	67.67
J211	2	135.00	Demand	2.20	441.08	132.69
J212	3	255.00	Demand	9.50	441.25	80.74
J213	440	175.00	Demand	7.32	441.17	115.39
J214	440	140.00	Demand	4.39	441.17	130.56
J215	2	135.00	Demand	9.08	441.13	132.71
J216	440	110.00	Demand	6.60	441.11	143.54
J217	WS	0.00	Demand	0.00	168.79	73.17
J218	171	70.00	Demand	2.93	152.77	35.88
J219	2	70.00	Demand	0.73	320.66	108.67
J220	171	72.00	Demand	0.73	157.05	36.87
J221	440	130.00	Demand	8.23	441.12	134.88
J222	440	287.00	Demand	0.00	441.08	66.80

© Haestad Methods, Inc.

Scenario: WSP Year 2013
Steady State Analysis
Junction Report

A2

Label	Zone	Elevation (ft)	Type	Base Flow (gpm)	Calculated Hydraulic Grade (ft)	Pressure (psi)
J400	3	275.00	Demand	9.08	440.03	71.54
J402	3	310.00	Demand	9.08	440.93	56.76
J403	3	215.00	Demand	6.05	441.23	98.08
J404	320	175.00	Demand	0.73	441.23	115.42
J501	1	30.00	Demand	11.38	146.63	50.56
J502	1	20.00	Demand	11.38	147.72	55.37
J503	1	35.00	Demand	11.38	147.93	48.96
J504	1	35.00	Demand	11.38	147.94	48.96
J505	1	50.00	Demand	11.38	148.21	42.58
J506	1	40.00	Demand	11.38	147.94	46.79
J507	1	55.00	Demand	11.38	147.31	40.02
J508	1	55.00	Demand	11.38	147.78	40.22
J509	1	55.00	Demand	11.38	147.78	40.22
J510	1	52.00	Demand	11.38	152.31	43.49
J511	1	48.00	Demand	11.38	146.33	42.63
J512	1	56.00	Demand	11.38	147.02	39.46
J513	1	48.00	Demand	11.38	146.47	42.69
J514	1	51.00	Demand	11.38	146.47	41.39
J515	1	52.00	Demand	11.38	146.47	40.95
J516	1	48.00	Demand	11.38	146.42	42.67
J517	1	46.00	Demand	11.38	146.30	43.48
J518	1	52.00	Demand	11.38	146.33	40.89
J519	1	52.00	Demand	11.38	146.43	40.94
J520	1	48.00	Demand	11.38	146.46	42.69
J602	320	265.00	Demand	0.00	321.10	24.32
J604	well 8	0.00	Demand	0.00	170.24	73.80
J610	99	50.00	Demand	0.73	164.48	49.63
J611	2	50.00	Demand	11.68	163.76	49.32
J612	171	50.00	Demand	5.86	166.70	50.59
J700	171	50.00	Demand	5.13	162.63	48.83
J710	171	62.00	Demand	5.86	162.53	43.58
J720	171	85.00	Demand	7.32	162.15	33.45
J730	171	85.00	Demand	8.23	161.90	33.34
J740	171	70.00	Demand	9.50	161.76	39.78
J750	Zone-1	30.00	Demand	0.91	161.71	57.10
J760	171	64.00	Demand	2.93	161.71	42.36
J770	171	60.00	Demand	8.05	161.71	44.09
J780	171	40.00	Demand	5.86	162.48	53.10
J790	171	45.00	Demand	4.39	162.48	50.93
J795	171	45.00	Demand	0.73	162.48	50.93
J800	171	30.00	Demand	0.73	144.88	49.80
J810	171	25.00	Demand	0.73	144.88	51.97
J820	171	25.00	Demand	2.93	144.87	51.96
J830	171	30.00	Demand	2.20	144.85	49.79
J840	171	30.00	Demand	1.46	144.85	49.79
J860	171	32.00	Demand	2.93	144.85	48.92
J870	171	35.00	Demand	2.20	144.85	47.62
J880	171	32.00	Demand	0.73	144.85	48.92
J890	171	35.00	Demand	2.93	144.85	47.62
J900	171	40.00	Demand	2.93	144.85	45.45
J910	171	42.00	Demand	0.73	144.85	44.59

Scenario: WSP Year 2013
Steady State Analysis
Pump Report

A2

Label	Elevation (ft)	Shutoff Head (ft)	Shutoff Discharge (gpm)	Design Head (ft)	Design Discharge (gpm)	Maximum Operating Head (ft)	Maximum Operating Discharge (gpm)	Control Status	Intake Pump Grade (ft)	Discharge Pump Grade (ft)	Discharge (gpm)	Pump Head (ft)
PS2-1	0.00	180.00	0.00	140.00	150.00	80.00	220.00	On	321.25	490.48	86.66	169.23
PS2-2	0.00	180.00	0.00	140.00	150.00	80.00	220.00	On	321.25	490.48	86.66	169.23
PS5-1	0.00	220.00	0.00	175.00	550.00	150.00	740.00	On	170.23	344.33	557.37	174.10
PS5-2	0.00	220.00	0.00	175.00	550.00	150.00	740.00	Off	170.24	344.32	0.00	0.00
PS6-1	350.00	120.00	0.00	90.00	500.00	0.00	1,000.00	On	439.88	557.58	138.60	117.69
Well 8 P	0.00	48.00	0.00	36.00	100.00	0.00	200.00	On	135.00	170.24	103.13	35.24
Well 9 P	0.00	386.67	0.00	290.00	200.00	0.00	400.00	On	149.83	442.33	197.40	292.50

Scenario: WSP Year 2013
Steady State Analysis
Tank Report

A2

Label	Zone	Base Elevation (ft)	Minimum Elevation (ft)	Initial HGL (ft)	Maximum Elevation (ft)	Inactive Volume (gal)	Tank Diameter (ft)	Inflow (gpm)	Current Status	Calculated Hydraulic Grade (ft)	Calculated Percent Full (%)
171 RES (LI	1	135.00	153.00	171.00	171.00	0.00	80.00	-2,078.51	Draining	171.00	100.0
320 RES	2	296.00	306.00	320.00	320.00	0.00	27.00	0.00	Full	320.00	100.0
440 RES	3	360.00	430.00	440.00	440.00	0.00	50.00	-31.44	Draining	440.00	100.0
T-1	WS	150.00	157.00	171.00	171.00	0.00	90.00	-2,968.04	Draining	171.00	100.0

© Haestad Methods, Inc.

Scenario: WSP Year 2013
Steady State Analysis
Valve Report

A2

Label	Elevation (ft)	Initial Pressure (psi)	Initial HGL (ft)	Diameter (in)	Control Status	Discharge (gpm)	From HGL (ft)	To HGL (ft)	Headloss (ft)
PRV-1	160.00	4.77	171.00	6.0	Closed	0.00	441.23	324.78	0.00
PRV-2	275.00	15.18	310.00	6.0	Closed	0.00	440.03	321.10	0.00
PRV-5	145.00	78.06	325.00	6.0	Throttling	557.36	344.32	325.06	19.25
PRV-6	175.00	117.09	445.00	6.0	Throttling	173.32	489.98	445.10	44.89

Scenario: WSP Year 2027
Steady State Analysis
Junction Report

A3
2027 PHD

Label	Zone	Elevation (ft)	Type	Base Flow (gpm)	Calculated Hydraulic Grade (ft)	Pressure (psi)
J-94	Zone-1	510.00	Demand	195.60	536.08	11.30
J-95	Zone-1	115.00	Demand	0.00	166.11	22.16
J602	320	265.00	Demand	0.00	319.92	23.81
J-35	440	380.00	Demand	6.36	440.23	26.11
J-36	440	368.00	Demand	2.54	440.23	31.31
J141	1	75.00	Demand	19.75	149.51	32.30
J73	1	80.00	Demand	19.75	155.26	32.63
J-71	Zone-1	90.00	Demand	1.27	166.11	32.99
J140	1	70.00	Demand	19.75	149.55	34.49
J730	171	85.00	Demand	14.29	166.40	35.29
J720	171	85.00	Demand	12.71	167.11	35.59
J76	1	72.00	Demand	19.75	154.82	35.90
J72	1	70.00	Demand	19.75	155.32	36.99
J4	1	80.00	Demand	19.75	165.76	37.18
J218	171	70.00	Demand	5.09	156.25	37.39
J62	171	70.00	Demand	19.75	156.25	37.39
J65	1	70.00	Demand	19.75	156.29	37.41
J19	1	65.00	Demand	19.75	151.49	37.50
J79	1	63.00	Demand	19.75	149.56	37.53
J78	1	63.00	Demand	19.75	149.60	37.54
J74	1	68.00	Demand	19.75	154.88	37.66
J14	1	72.00	Demand	19.75	159.30	37.85
J142	1	62.00	Demand	19.75	149.56	37.96
J55	1	62.00	Demand	19.75	150.11	38.20
J70	1	62.00	Demand	19.75	150.13	38.20
J143	1	55.00	Demand	19.75	143.42	38.33
J18	1	64.00	Demand	19.75	152.81	38.50
J20	1	61.00	Demand	19.75	150.05	38.61
J3	1	80.00	Demand	19.75	169.12	38.63
J69	1	62.00	Demand	19.75	151.30	38.71
J99	2	75.00	Demand	19.75	164.44	38.78
J15	1	67.00	Demand	19.75	156.45	38.78
J61	1	66.00	Demand	14.29	155.62	38.85
J17	1	64.00	Demand	19.75	153.68	38.88
J10	1	72.00	Demand	15.13	161.68	38.88
J220	171	72.00	Demand	1.27	161.98	39.01
J71	1	60.00	Demand	19.75	150.05	39.04
J75	1	65.00	Demand	19.75	155.08	39.05
J64	1	64.00	Demand	19.75	154.56	39.26
J16	1	65.00	Demand	19.75	155.61	39.28
J145	1	58.00	Demand	19.75	148.89	39.40
J144	1	58.00	Demand	19.75	148.90	39.41
J68	1	60.00	Demand	19.75	151.68	39.75
J146	1	56.00	Demand	19.75	147.75	39.78
J147	1	56.00	Demand	19.75	148.48	40.09
J149	1	56.00	Demand	19.75	148.48	40.09
J56	1	58.00	Demand	19.75	150.56	40.13
J60	1	63.00	Demand	19.75	155.61	40.15
J13	1	66.00	Demand	19.75	159.30	40.45
J148	1	55.00	Demand	19.75	148.49	40.53
J77	1	60.00	Demand	19.75	153.67	40.61
J177	1	75.00	Demand	19.75	168.74	40.64

Scenario: WSP Year 2027
Steady State Analysis
Junction Report

A3
2027 PHD

Label	Zone	Elevation (ft)	Type	Base Flow (gpm)	Calculated Hydraulic Grade (ft)	Pressure (psi)
BB Supply	1	20.00	Demand	2,723.00	119.20	43.01
BBJ Supply	171	25.00	Demand	160.00	158.61	57.92
Blaine - West Supply	171	15.00	Demand	962.00	141.70	54.92
J-24	320	70.00	Demand	18.91	324.21	110.21
J-25	320	40.00	Demand	1.27	324.21	123.21
J-26	320	42.00	Demand	2.54	324.21	122.34
J-27	440	222.00	Demand	1.26	438.14	93.70
J-28	171	240.00	Demand	2.54	438.14	85.90
J-29	440	248.00	Demand	6.36	438.14	82.43
J-30	440	248.00	Demand	2.54	438.14	82.43
J-31	171	258.00	Demand	76.28	437.81	77.95
J-32	440	260.00	Demand	1.27	437.81	77.08
J-33	440	275.00	Demand	1.26	437.81	70.58
J-34	440	287.00	Demand	3.81	440.24	66.43
J-35	440	380.00	Demand	6.36	440.23	26.11
J-36	440	368.00	Demand	2.54	440.23	31.31
J-37	440	276.00	Demand	2.54	440.23	71.20
J-39	320	55.00	Demand	6.36	318.08	114.05
J-40	320	120.00	Demand	76.28	318.59	86.09
J-41	320	70.00	Demand	20.28	318.17	107.59
J-42	320	40.00	Demand	3.81	324.21	123.21
J-43	320	40.00	Demand	0.00	324.21	123.21
J-44	320	40.00	Demand	0.00	324.21	123.21
J-45	320	40.00	Demand	0.00	324.21	123.21
J-46	320	40.00	Demand	1.26	324.21	123.21
J-47	320	40.00	Demand	0.00	324.21	123.21
J-48	320	40.00	Demand	1.27	324.21	123.21
J-49	440	225.00	Demand	1.27	439.27	92.89
J-50	440	150.00	Demand	1.27	421.66	117.77
J-51	440	150.00	Demand	5.09	410.59	112.97
J-52	440	238.00	Demand	14.29	440.24	87.67
J-53	440	245.00	Demand	5.36	440.23	84.64
J-54	440	225.00	Demand	12.50	440.22	93.30
J-55	171	15.00	Demand	3.57	142.27	55.17
J-56	171	15.00	Demand	5.36	142.27	55.17
J-57	171	15.00	Demand	1.79	142.25	55.17
J-58	171	15.00	Demand	1.79	142.27	55.17
J-59	171	15.00	Demand	1.26	142.27	55.17
J-60	171	38.00	Demand	1.26	160.95	53.30
J-61	171	20.00	Demand	2.54	158.47	60.03
J-62	171	20.00	Demand	38.14	158.43	60.01
J-63	320	65.00	Demand	1.26	318.40	109.85
J-64	320	65.00	Demand	1.26	318.40	109.85
J-65	320	110.00	Demand	15.24	318.55	90.41
J-66	320	110.00	Demand	5.09	318.55	90.41
J-67	320	95.00	Demand	2.54	318.52	96.90
J-68	320	95.00	Demand	2.52	318.51	96.90
J-69	Zone-1	100.00	Demand	1.79	318.50	94.73
J-70	Zone-1	90.00	Demand	1.27	324.25	101.55
J-71	Zone-1	90.00	Demand	1.27	166.11	32.99
J-72	171	30.00	Demand	2.54	323.85	127.39
J-73	440	175.00	Demand	0.00	484.91	134.35

Scenario: WSP Year 2027
Steady State Analysis
Junction Report

A3

Label	Zone	Elevation (ft)	Type	Base Flow (gpm)	Calculated Hydraulic Grade (ft)	Pressure (psi)
J-74	171	20.00	Demand	35.72	144.42	53.94
J-75	171	20.00	Demand	1.27	146.22	54.72
J-76	171	20.00	Demand	1.79	146.19	54.71
J-77	171	20.00	Demand	1.79	146.22	54.72
J-78	171	20.00	Demand	1.79	146.22	54.72
J-79	171	20.00	Demand	5.09	159.13	60.31
J-80	171	20.00	Demand	7.63	159.12	60.31
J-81	171	20.00	Demand	11.45	159.11	60.31
J-82	171	20.00	Demand	5.09	159.12	60.31
J-83	171	20.00	Demand	5.09	159.17	60.33
J-84	171	20.00	Demand	10.17	159.16	60.33
J-85	Zone-1	258.00	Demand	0.00	440.25	79.01
J-86	Zone-1	308.00	Demand	0.00	439.90	57.18
J-88	Zone-1	325.00	Demand	0.00	439.93	49.83
J-89	Zone-1	325.00	Demand	0.00	439.28	49.54
J-90	Zone-1	325.00	Demand	0.00	540.47	93.41
J-91	Zone-1	285.00	Demand	0.00	539.86	110.49
J-92	Zone-1	420.00	Demand	0.00	537.26	50.83
J-93	Zone-1	415.00	Demand	195.60	536.73	52.77
J-94	Zone-1	510.00	Demand	195.60	536.08	11.30
J-95	Zone-1	115.00	Demand	0.00	166.11	22.16
J-96	Zone-1	40.00	Demand	0.00	158.93	51.56
J-97	Zone-1	20.00	Demand	0.00	158.93	60.23
J-100	Zone-1	430.00	Demand	0.00	537.55	46.62
J-101	1	60.00	Demand	0.00	164.65	45.37
J1	WS	0.00	Demand	0.00	170.98	74.12
J2	WS	0.00	Demand	0.00	170.37	73.86
J3	1	80.00	Demand	19.75	169.12	38.63
J4	1	80.00	Demand	19.75	165.76	37.18
J5	1	50.00	Demand	19.75	161.14	48.18
J6	1	40.00	Demand	19.75	160.77	52.35
J7	1	35.00	Demand	19.75	160.00	54.19
J10	1	72.00	Demand	15.13	161.68	38.88
J11	1	54.00	Demand	19.75	160.05	45.97
J12	1	59.00	Demand	19.75	159.33	43.50
J13	1	66.00	Demand	19.75	159.30	40.45
J14	1	72.00	Demand	19.75	159.30	37.85
J15	1	67.00	Demand	19.75	156.45	38.78
J16	1	65.00	Demand	19.75	155.61	39.28
J17	1	64.00	Demand	19.75	153.68	38.88
J18	1	64.00	Demand	19.75	152.81	38.50
J19	1	65.00	Demand	19.75	151.49	37.50
J20	1	61.00	Demand	19.75	150.05	38.61
J21	1	50.00	Demand	19.75	147.77	42.39
J22	1	35.00	Demand	19.75	147.48	48.76
J23	1	35.00	Demand	19.75	147.29	48.68
J24	1	35.00	Demand	19.75	144.45	47.45
J25	171	15.00	Demand	84.06	142.27	55.17
J26	1	52.00	Demand	19.75	158.51	46.17
J27	1	50.00	Demand	19.75	157.31	46.52
J28	1	50.00	Demand	19.75	156.50	46.17
J29	1	55.00	Demand	19.75	155.11	43.40

Scenario: WSP Year 2027
Steady State Analysis
Junction Report

A3

Label	Zone	Elevation (ft)	Type	Base Flow (gpm)	Calculated Hydraulic Grade (ft)	Pressure (psi)
J30	1	56.00	Demand	19.75	156.54	43.58
J31	1	55.00	Demand	19.75	158.98	45.08
J32	1	55.00	Demand	19.75	158.37	44.81
J33	1	50.00	Demand	19.75	156.46	46.15
J34	1	52.00	Demand	19.75	153.62	44.05
J35	1	53.00	Demand	18.91	152.58	43.17
J36	1	54.00	Demand	19.75	151.62	42.32
J37	1	53.00	Demand	19.75	151.00	42.49
J38	1	50.00	Demand	19.75	150.69	43.65
J39	1	50.00	Demand	19.75	150.69	43.65
J40	1	55.00	Demand	19.75	151.25	41.73
J41	1	53.00	Demand	19.75	151.11	42.53
J42	1	56.00	Demand	19.75	152.95	42.03
J43	1	43.00	Demand	19.75	150.05	46.41
J44	1	51.00	Demand	19.75	150.18	43.00
J45	1	51.00	Demand	19.75	150.23	43.02
J46	1	47.00	Demand	19.75	150.26	44.77
J47	1	43.00	Demand	19.75	149.54	46.19
J48	1	48.00	Demand	19.75	149.39	43.96
J49	1	40.00	Demand	19.75	148.92	47.22
J50	1	47.00	Demand	19.75	149.12	44.27
J51	1	35.00	Demand	19.75	148.32	49.13
J52	1	35.00	Demand	19.75	147.49	48.77
J53	1	45.00	Demand	19.75	147.67	44.51
J54	1	52.00	Demand	19.75	148.49	41.83
J55	1	62.00	Demand	19.75	150.11	38.20
J56	1	58.00	Demand	19.75	150.56	40.13
J57	1	51.00	Demand	19.75	151.25	43.46
J58	1	60.00	Demand	19.75	154.54	40.99
J59	1	57.00	Demand	19.75	154.82	42.41
J60	1	63.00	Demand	19.75	155.61	40.15
J61	1	66.00	Demand	14.29	155.62	38.85
J62	171	70.00	Demand	19.75	156.25	37.39
J63	1	20.00	Demand	19.75	159.12	60.31
J64	1	64.00	Demand	19.75	154.56	39.26
J65	1	70.00	Demand	19.75	156.29	37.41
J66	1	60.00	Demand	19.75	154.60	41.01
J67	1	55.00	Demand	19.75	151.07	41.65
J68	1	60.00	Demand	19.75	151.68	39.75
J69	1	62.00	Demand	19.75	151.30	38.71
J70	1	62.00	Demand	19.75	150.13	38.20
J71	1	60.00	Demand	19.75	150.05	39.04
J72	1	70.00	Demand	19.75	155.32	36.99
J73	1	80.00	Demand	19.75	155.26	32.63
J74	1	68.00	Demand	19.75	154.88	37.66
J75	1	65.00	Demand	19.75	155.08	39.05
J76	1	72.00	Demand	19.75	154.82	35.90
J77	1	60.00	Demand	19.75	153.67	40.61
J78	1	63.00	Demand	19.75	149.60	37.54
J79	1	63.00	Demand	19.75	149.56	37.53
J80	2	160.00	Demand	10.17	319.47	69.13
J81	171	130.00	Demand	1.27	318.69	81.80

Scenario: WSP Year 2027
Steady State Analysis
Junction Report

A3

Label	Zone	Elevation (ft)	Type	Base Flow (gpm)	Calculated Hydraulic Grade (ft)	Pressure (psi)
J82	171	125.00	Demand	1.27	318.59	83.92
J83	2	110.00	Demand	14.29	318.53	90.40
J84	2	65.00	Demand	14.29	318.33	109.83
J85	2	100.00	Demand	14.29	318.17	94.58
J86	2	102.00	Demand	14.29	318.13	93.70
J87	2	95.00	Demand	14.29	318.11	96.72
J88	2	80.00	Demand	14.29	318.10	103.22
J89	2	60.00	Demand	14.29	318.08	111.88
J91	2	70.00	Demand	14.29	318.11	107.56
J92	2	85.00	Demand	14.29	318.13	101.06
J93	2	100.00	Demand	19.75	318.17	94.58
J99	2	75.00	Demand	19.75	164.44	38.78
J100	3	250.00	Demand	15.76	440.50	82.59
J101	3	260.00	Demand	15.76	440.23	78.13
J102	440	290.00	Demand	15.76	439.87	64.97
J103	440	280.00	Demand	5.09	438.93	68.90
J104	3	255.00	Demand	15.76	440.23	80.30
J105	440	260.00	Demand	15.76	440.23	78.13
J106	440	205.00	Demand	5.09	440.15	101.94
J107	3	275.00	Demand	15.76	440.36	71.68
J108	440	325.00	Demand	15.76	439.92	49.82
J140	1	70.00	Demand	19.75	149.55	34.49
J141	1	75.00	Demand	19.75	149.51	32.30
J142	1	62.00	Demand	19.75	149.56	37.96
J143	1	55.00	Demand	19.75	143.42	38.33
J144	1	58.00	Demand	19.75	148.90	39.41
J145	1	58.00	Demand	19.75	148.89	39.40
J146	1	56.00	Demand	19.75	147.75	39.78
J147	1	56.00	Demand	19.75	148.48	40.09
J148	1	55.00	Demand	19.75	148.49	40.53
J149	1	56.00	Demand	19.75	148.48	40.09
J150	1	53.00	Demand	19.75	148.17	41.26
J151	1	52.00	Demand	19.75	147.74	41.51
J152	1	52.00	Demand	19.75	147.75	41.51
J153	1	50.00	Demand	19.75	147.72	42.37
J154	1	52.00	Demand	19.75	148.98	42.04
J155	1	35.00	Demand	19.75	148.32	49.13
J156	1	53.00	Demand	19.75	151.05	42.51
J157	1	53.00	Demand	19.75	150.55	42.29
J158	1	50.00	Demand	19.75	156.12	46.01
J159	1	50.00	Demand	19.75	155.53	45.75
J160	1	57.00	Demand	30.26	157.29	43.48
J161	1	56.00	Demand	19.75	158.05	44.24
J162	1	50.00	Demand	19.75	158.38	46.98
J163	1	50.00	Demand	19.75	157.47	46.59
J164	1	50.00	Demand	19.75	160.00	47.69
J165	1	45.00	Demand	19.75	157.73	48.87
J166	1	53.00	Demand	19.75	150.99	42.48
J167	1	30.00	Demand	19.75	157.76	55.39
J168	1	20.00	Demand	19.75	159.23	60.36
J169	171	20.00	Demand	19.75	159.12	60.31
J170	1	30.00	Demand	19.75	141.48	48.33

Scenario: WSP Year 2027
Steady State Analysis
Junction Report

A3

Label	Zone	Elevation (ft)	Type	Base Flow (gpm)	Calculated Hydraulic Grade (ft)	Pressure (psi)
J171	1	20.00	Demand	19.75	141.42	52.64
J172	1	30.00	Demand	19.75	159.38	56.09
J173	171	30.00	Demand	1.27	159.02	55.93
J174	1	50.00	Demand	19.75	161.53	48.35
J175	1	50.00	Demand	19.75	163.12	49.04
J176	1	65.00	Demand	19.75	167.62	44.49
J177	1	75.00	Demand	19.75	168.74	40.64
J178	1	45.00	Demand	19.75	165.70	52.33
J179	1	80.00	Demand	19.75	324.25	105.89
J180	320	145.00	Demand	0.00	365.91	95.77
J181	320	145.00	Demand	0.00	325.05	78.06
J182	2	165.00	Demand	14.29	320.18	67.28
J183	320	175.00	Demand	0.00	319.92	62.83
J184	3	185.00	Demand	15.76	444.63	112.55
J185	320	135.00	Demand	14.29	318.69	79.63
J186	2	135.00	Demand	8.90	318.95	79.74
J187	320	115.00	Demand	10.17	318.58	88.26
J188	2	115.00	Demand	14.29	318.54	88.24
J189	2	130.00	Demand	14.29	318.59	81.76
J190	2	105.00	Demand	14.29	318.50	92.56
J191	2	110.00	Demand	14.29	318.50	90.39
J192	2	95.00	Demand	14.29	318.50	96.89
J193	2	100.00	Demand	14.29	318.50	94.72
J194	2	95.00	Demand	14.29	318.21	96.76
J195	2	125.00	Demand	14.29	318.43	83.86
J196	2	80.00	Demand	14.29	318.43	103.36
J197	2	95.00	Demand	14.29	324.27	99.39
J198	2	90.00	Demand	14.29	324.26	101.55
J199	2	75.00	Demand	14.29	324.24	108.05
J200	2	73.00	Demand	14.29	324.23	108.92
J201	2	72.00	Demand	14.29	324.23	109.35
J202	2	80.00	Demand	14.29	324.23	105.88
J203	2	80.00	Demand	14.29	324.22	105.88
J204	2	70.00	Demand	14.29	324.22	110.21
J205	2	80.00	Demand	14.29	324.22	105.87
J206	2	150.00	Demand	14.29	324.27	75.55
J207	3	245.00	Demand	15.76	440.24	84.64
J208	440	255.00	Demand	10.17	438.15	79.40
J209	3	300.00	Demand	15.76	439.90	60.65
J210	440	285.00	Demand	7.63	440.24	67.30
J211	2	135.00	Demand	3.81	440.23	132.33
J212	3	255.00	Demand	16.50	440.28	80.32
J213	440	175.00	Demand	12.71	440.15	114.95
J214	440	140.00	Demand	7.63	440.15	130.12
J215	2	135.00	Demand	15.76	440.04	132.24
J216	440	110.00	Demand	11.45	439.99	143.06
J217	WS	0.00	Demand	0.00	169.53	73.50
J218	171	70.00	Demand	5.09	156.25	37.39
J219	2	70.00	Demand	1.27	318.10	107.56
J220	171	72.00	Demand	1.27	161.98	39.01
J221	440	130.00	Demand	14.29	440.01	134.39
J222	440	287.00	Demand	0.00	440.24	66.43

© Haestad Methods, Inc.

Scenario: WSP Year 2027
Steady State Analysis
Junction Report

A3

Label	Zone	Elevation (ft)	Type	Base Flow (gpm)	Calculated Hydraulic Grade (ft)	Pressure (psi)
J400	3	275.00	Demand	15.76	439.87	71.48
J402	3	310.00	Demand	15.76	440.18	56.43
J403	3	215.00	Demand	10.51	440.28	97.66
J404	320	175.00	Demand	1.27	440.28	115.00
J501	1	30.00	Demand	19.75	159.61	56.19
J502	1	20.00	Demand	19.75	158.47	60.03
J503	1	35.00	Demand	19.75	157.34	53.04
J504	1	35.00	Demand	19.75	157.04	52.91
J505	1	50.00	Demand	19.75	156.91	46.35
J506	1	40.00	Demand	19.75	156.83	50.65
J507	1	55.00	Demand	19.75	153.97	42.91
J508	1	55.00	Demand	19.75	155.73	43.67
J509	1	55.00	Demand	19.75	155.73	43.67
J510	1	52.00	Demand	19.75	157.31	45.65
J511	1	48.00	Demand	19.75	150.16	44.29
J512	1	56.00	Demand	19.75	152.72	41.93
J513	1	48.00	Demand	19.75	150.94	44.63
J514	1	51.00	Demand	19.75	150.94	43.32
J515	1	52.00	Demand	19.75	150.94	42.89
J516	1	48.00	Demand	19.75	150.70	44.52
J517	1	46.00	Demand	19.75	150.29	45.21
J518	1	52.00	Demand	19.75	150.34	42.63
J519	1	52.00	Demand	19.75	150.60	42.75
J520	1	48.00	Demand	19.75	150.28	44.34
J602	320	265.00	Demand	0.00	319.92	23.81
J604	well 8	0.00	Demand	0.00	170.29	73.83
J610	99	50.00	Demand	1.27	166.11	50.34
J611	2	50.00	Demand	20.28	166.25	50.40
J612	171	50.00	Demand	10.17	168.16	51.23
J700	171	50.00	Demand	8.90	168.42	51.34
J710	171	62.00	Demand	10.17	168.16	46.02
J720	171	85.00	Demand	12.71	167.11	35.59
J730	171	85.00	Demand	14.29	166.40	35.29
J740	171	70.00	Demand	16.50	166.02	41.63
J750	Zone-1	30.00	Demand	1.58	165.89	58.91
J760	171	64.00	Demand	5.09	165.88	44.17
J770	171	60.00	Demand	13.97	165.87	45.90
J780	171	40.00	Demand	10.17	168.03	55.50
J790	171	45.00	Demand	7.63	168.02	53.33
J795	171	45.00	Demand	1.27	168.02	53.33
J800	171	30.00	Demand	1.27	159.00	55.93
J810	171	25.00	Demand	1.27	158.99	58.09
J820	171	25.00	Demand	5.09	158.97	58.08
J830	171	30.00	Demand	3.81	158.93	55.89
J840	171	30.00	Demand	2.54	158.93	55.89
J860	171	32.00	Demand	5.09	158.92	55.02
J870	171	35.00	Demand	3.81	158.92	53.72
J880	171	32.00	Demand	1.27	158.92	55.02
J890	171	35.00	Demand	5.09	158.92	53.72
J900	171	40.00	Demand	5.09	158.92	51.55
J910	171	42.00	Demand	1.27	158.92	50.69

© Haestad Methods, Inc.

Scenario: WSP Year 2027
Steady State Analysis
Pump Report

A3

Label	Elevation (ft)	Shutoff Head (ft)	Shutoff Discharge (gpm)	Design Head (ft)	Design Discharge (gpm)	Maximum Operating Head (ft)	Maximum Operating Discharge (gpm)	Control Status	Intake Pump Grade (ft)	Discharge Pump Grade (ft)	Discharge (gpm)	Pump Head (ft)
PS2-1	0.00	180.00	0.00	140.00	150.00	80.00	220.00	On	319.92	484.91	99.60	164.98
PS2-2	0.00	180.00	0.00	140.00	150.00	80.00	220.00	On	319.92	484.91	99.59	164.98
PS5-1	0.00	220.00	0.00	175.00	550.00	150.00	740.00	On	170.29	365.92	364.36	195.63
PS5-2	0.00	220.00	0.00	175.00	550.00	150.00	740.00	On	170.29	365.92	364.36	195.63
PS6-1	350.00	120.00	0.00	90.00	500.00	0.00	1,000.00	On	439.15	540.78	391.20	101.64
Well 8 P	0.00	48.00	0.00	36.00	100.00	0.00	200.00	On	135.00	170.29	102.90	35.29
Well 9 P	0.00	386.67	0.00	290.00	200.00	0.00	400.00	On	149.83	441.41	198.36	291.58

© Haestad Methods, Inc.
CHS Engineers Inc
37 Brookside Road Waterbury, CT 06708 USA +1-203-755-1666

Scenario: WSP Year 2027
Steady State Analysis
Tank Report

A3

Label	Zone	Base Elevation (ft)	Minimum Elevation (ft)	Initial HGL (ft)	Maximum Elevation (ft)	Inactive Volume (gal)	Tank Diameter (ft)	Inflow (gpm)	Current Status	Calculated Hydraulic Grade (ft)	Calculated Percent Full (%)
171 RES (LI	1	135.00	153.00	171.00	171.00	0.00	80.00	-1,993.65	Draining	171.00	100.0
320 RES	2	296.00	306.00	320.00	320.00	0.00	27.00	-137.68	Draining	320.00	100.0
440 RES	3	360.00	430.00	440.00	440.00	0.00	50.00	-451.24	Draining	440.00	100.0
T-1	WS	150.00	157.00	171.00	171.00	0.00	90.00	-5,509.06	Draining	171.00	100.0

Scenario: WSP Year 2027
Steady State Analysis
Valve Report

A3

Label	Elevation (ft)	Initial Pressure (psi)	Initial HGL (ft)	Diameter (in)	Control Status	Discharge (gpm)	From HGL (ft)	To HGL (ft)	Headloss (ft)
PRV-1	160.00	4.77	171.00	6.0	Closed	0.00	440.28	324.27	0.00
PRV-2	275.00	15.18	310.00	6.0	Closed	0.00	439.87	319.92	0.00
PRV-5	145.00	78.06	325.00	6.0	Throttling	728.72	365.90	325.06	40.84
PRV-6	175.00	117.09	445.00	6.0	Throttling	199.19	484.26	445.10	39.17

© Haestad Methods, Inc.
CHS Engineers Inc
37 Brookside Road Waterbury, CT 06708 USA +1-203-755-1666

Scenario: WSP Year 2013
Fire Flow Analysis
Fire Flow Report

A4

2013MDD + Fire

Label	Elevation (ft)	Satisfies Fire Flow Constraints?	Base Flow (gpm)	Needed Fire Flow (gpm)	Available Fire Flow (gpm)	Residual Pressure (psi)	Calculated Residual Pressure (psi)	Minimum System Pressure (psi)	Calculated Minimum System Pressure (psi)	Minimum System Junction
BB Supply	20.00	true	1,773.70	1,000.00	1,500.00	20.00	25.54	20.00	21.69	J-95
BBJ Supply	25.00	true	44.20	1,000.00	1,468.84	20.00	20.00	20.00	21.71	J-95
Blaine - West S	15.00	true	464.10	1,000.00	1,500.00	20.00	44.75	20.00	21.24	J-95
J-24	70.00	true	5.88	1,000.00	1,500.00	20.00	84.14	20.00	22.64	J-95
J-25	40.00	true	0.40	1,000.00	1,500.00	20.00	91.13	20.00	22.64	J-95
J-26	42.00	true	0.79	1,000.00	1,500.00	20.00	93.68	20.00	22.64	J-95
J-27	222.00	false	0.39	1,000.00	975.27	20.00	21.29	20.00	20.00	J-33
J-28	240.00	false	0.79	1,000.00	975.27	20.00	23.81	20.00	20.00	J-33
J-29	248.00	false	1.98	1,000.00	826.35	20.00	20.00	20.00	20.00	J-30
J-30	248.00	false	0.79	1,000.00	780.38	20.00	20.00	20.00	21.52	J-94
J-31	258.00	false	23.70	1,000.00	835.71	20.00	27.37	20.00	20.00	J-33
J-32	260.00	false	0.40	1,000.00	729.20	20.00	26.50	20.00	20.00	J-33
J-33	275.00	false	0.39	1,000.00	693.04	20.00	20.00	20.00	21.53	J-94
J-34	287.00	false	1.19	1,000.00	922.73	20.00	60.32	20.00	20.00	J-35
J-35	380.00	false	1.98	1,000.00	705.60	20.00	20.00	20.00	21.53	J-94
J-36	368.00	false	0.79	1,000.00	758.58	20.00	25.20	20.00	20.00	J-35
J-37	276.00	false	0.79	1,000.00	827.27	20.00	65.09	20.00	20.00	J-35
J-39	55.00	true	1.98	1,000.00	1,500.00	20.00	43.73	20.00	22.80	J-95
J-40	120.00	true	23.70	1,000.00	1,500.00	20.00	63.71	20.00	22.79	J-95
J-41	70.00	true	6.30	1,000.00	1,500.00	20.00	43.34	20.00	22.80	J-95
J-42	40.00	true	1.19	1,000.00	1,500.00	20.00	85.35	20.00	22.64	J-95
J-43	40.00	true	0.00	1,000.00	1,500.00	20.00	79.92	20.00	22.64	J-95
J-44	40.00	true	0.00	1,000.00	1,500.00	20.00	78.74	20.00	22.64	J-95
J-45	40.00	true	0.00	1,000.00	1,500.00	20.00	78.06	20.00	22.64	J-95
J-46	40.00	true	0.39	1,000.00	1,500.00	20.00	77.65	20.00	22.64	J-95
J-47	40.00	true	0.00	1,000.00	1,500.00	20.00	78.96	20.00	22.64	J-95
J-48	40.00	true	0.40	1,000.00	1,500.00	20.00	73.55	20.00	22.64	J-95
J-49	225.00	false	0.40	1,000.00	122.23	20.00	20.00	20.00	22.89	J-95
J-50	150.00	false	0.40	1,000.00	25.01	20.00	20.55	20.00	20.00	J-51
J-51	150.00	false	1.58	1,000.00	17.29	20.00	20.00	20.00	22.91	J-95
J-52	238.00	true	4.44	1,000.00	1,082.03	20.00	66.43	20.00	20.00	J-35
J-53	245.00	true	1.67	1,000.00	1,082.03	20.00	53.47	20.00	20.00	J-35
J-54	225.00	true	3.89	1,000.00	1,082.03	20.00	52.67	20.00	20.00	J-35
J-55	15.00	true	1.11	1,000.00	1,500.00	20.00	37.91	20.00	21.24	J-95
J-56	15.00	true	1.67	1,000.00	1,500.00	20.00	34.95	20.00	21.24	J-95
J-57	15.00	false	0.56	1,000.00	186.40	20.00	20.00	20.00	22.74	J-95
J-58	15.00	true	0.56	1,000.00	1,500.00	20.00	20.90	20.00	21.24	J-95
J-59	15.00	true	0.39	1,000.00	1,297.07	20.00	20.00	20.00	21.50	J-95
J-60	38.00	true	0.39	1,000.00	1,500.00	20.00	39.42	20.00	21.64	J-95
J-61	20.00	true	0.79	1,000.00	1,500.00	20.00	52.58	20.00	21.47	J-95
J-62	20.00	true	11.85	1,000.00	1,500.00	20.00	35.71	20.00	21.47	J-95
J-63	65.00	true	0.39	1,000.00	1,500.00	20.00	94.65	20.00	22.80	J-95
J-64	65.00	true	0.39	1,000.00	1,500.00	20.00	82.38	20.00	22.80	J-95
J-65	110.00	true	4.73	1,000.00	1,500.00	20.00	80.92	20.00	22.80	J-95
J-66	110.00	true	1.58	1,000.00	1,500.00	20.00	80.70	20.00	22.80	J-95
J-67	95.00	true	0.79	1,000.00	1,500.00	20.00	86.59	20.00	22.80	J-95
J-68	95.00	true	0.78	1,000.00	1,500.00	20.00	86.42	20.00	22.80	J-95
J-69	100.00	true	0.56	1,000.00	1,500.00	20.00	78.33	20.00	22.80	J-95
J-70	90.00	true	0.40	1,000.00	1,500.00	20.00	82.46	20.00	22.64	J-95
J-71	90.00	true	0.40	1,000.00	1,290.04	20.00	21.30	20.00	20.00	J-95

Scenario: WSP Year 2013
Fire Flow Analysis
Fire Flow Report

A4

Label	Elevation (ft)	Satisfies Fire Flow Constraints?	Base Flow (gpm)	Needed Fire Flow (gpm)	Available Fire Flow (gpm)	Residual Pressure (psi)	Calculated Residual Pressure (psi)	Minimum System Pressure (psi)	Calculated Minimum System Pressure (psi)	Minimum System Junction
J-72	30.00	false	0.79	1,000.00	85.46	20.00	20.00	20.00	22.90	J-95
J-73	175.00	false	0.00	1,000.00	673.78	20.00	20.00	20.00	20.00	PRV-6
J-74	20.00	true	11.10	1,000.00	1,500.00	20.00	30.68	20.00	21.24	J-95
J-75	20.00	true	0.40	1,000.00	1,500.00	20.00	48.86	20.00	21.24	J-95
J-76	20.00	false	0.56	1,000.00	135.54	20.00	20.00	20.00	22.79	J-95
J-77	20.00	true	0.56	1,000.00	1,500.00	20.00	22.51	20.00	21.24	J-95
J-78	20.00	true	0.56	1,000.00	1,429.39	20.00	20.00	20.00	20.00	J-76
J-79	20.00	true	1.58	1,000.00	1,500.00	20.00	41.16	20.00	21.59	J-95
J-80	20.00	true	2.37	1,000.00	1,500.00	20.00	41.00	20.00	21.59	J-95
J-81	20.00	true	3.56	1,000.00	1,433.20	20.00	20.00	20.00	21.65	J-95
J-82	20.00	true	1.58	1,000.00	1,500.00	20.00	41.24	20.00	21.58	J-95
J-83	20.00	true	1.58	1,000.00	1,500.00	20.00	42.65	20.00	21.59	J-95
J-84	20.00	true	3.16	1,000.00	1,492.71	20.00	20.00	20.00	21.59	J-95
J-85	258.00	true	0.00	1,000.00	1,193.73	20.00	69.08	20.00	20.00	J-35
J-86	308.00	true	0.00	1,000.00	1,500.00	20.00	54.76	20.00	21.38	J-94
J-88	325.00	true	0.00	1,000.00	1,500.00	20.00	49.68	20.00	21.38	J-94
J-89	325.00	false	0.00	1,000.00	922.73	20.00	48.30	20.00	20.00	J-94
J-90	325.00	false	0.00	1,000.00	285.70	20.00	100.23	20.00	20.00	J-94
J-91	285.00	false	0.00	1,000.00	284.55	20.00	117.56	20.00	20.00	J-94
J-92	420.00	false	0.00	1,000.00	276.67	20.00	59.02	20.00	20.00	J-94
J-93	415.00	false	42.00	1,000.00	274.67	20.00	61.18	20.00	20.00	J-94
J-94	510.00	false	0.00	1,000.00	268.06	20.00	20.00	20.00	22.87	J-95
J-95	115.00	false	0.00	1,000.00	356.48	20.00	20.00	20.00	32.36	J-94
J-96	40.00	false	0.00	1,000.00	569.03	20.00	20.00	20.00	22.49	J-95
J-97	20.00	false	0.00	1,000.00	662.19	20.00	28.67	20.00	20.00	J-96
J-100	430.00	false	0.00	1,000.00	277.77	20.00	54.69	20.00	20.00	J-94
J-101	60.00	true	0.00	1,000.00	1,500.00	20.00	33.38	20.00	21.70	J-95
J1	0.00	true	0.00	1,000.00	1,500.00	20.00	74.13	20.00	22.91	J-95
J2	0.00	true	0.00	1,000.00	1,500.00	20.00	73.22	20.00	22.81	J-95
J3	80.00	true	6.14	1,000.00	1,500.00	20.00	31.32	20.00	22.43	J-95
J4	80.00	true	6.14	1,000.00	1,500.00	20.00	25.71	20.00	21.84	J-95
J5	50.00	true	6.14	1,000.00	1,500.00	20.00	37.63	20.00	21.69	J-95
J6	40.00	true	6.14	1,000.00	1,500.00	20.00	41.94	20.00	21.69	J-95
J7	35.00	true	6.14	1,000.00	1,500.00	20.00	43.69	20.00	21.69	J-95
J10	72.00	true	4.70	1,000.00	1,500.00	20.00	34.81	20.00	21.58	J-95
J11	54.00	true	6.14	1,000.00	1,500.00	20.00	41.92	20.00	21.40	J-95
J12	59.00	true	6.14	1,000.00	1,500.00	20.00	39.50	20.00	21.29	J-95
J13	66.00	true	6.14	1,000.00	1,500.00	20.00	36.44	20.00	21.18	J-95
J14	72.00	true	6.14	1,000.00	1,500.00	20.00	34.57	20.00	20.92	J-95
J15	67.00	true	6.14	1,000.00	1,500.00	20.00	34.94	20.00	21.03	J-95
J16	65.00	true	6.14	1,000.00	1,500.00	20.00	35.41	20.00	21.05	J-95
J17	64.00	true	6.14	1,000.00	1,500.00	20.00	34.76	20.00	21.11	J-95
J18	64.00	true	6.14	1,000.00	1,500.00	20.00	34.19	20.00	21.13	J-95
J19	65.00	true	6.14	1,000.00	1,500.00	20.00	32.84	20.00	21.15	J-95
J20	61.00	true	6.14	1,000.00	1,500.00	20.00	34.05	20.00	21.18	J-95
J21	50.00	true	6.14	1,000.00	1,500.00	20.00	37.51	20.00	21.22	J-95
J22	35.00	true	6.14	1,000.00	1,500.00	20.00	43.62	20.00	21.23	J-95
J23	35.00	true	6.14	1,000.00	1,500.00	20.00	43.73	20.00	21.24	J-95
J24	35.00	true	6.14	1,000.00	1,500.00	20.00	40.07	20.00	21.24	J-95
J25	15.00	true	26.12	1,000.00	1,500.00	20.00	45.69	20.00	21.24	J-95

Scenario: WSP Year 2013
Fire Flow Analysis
Fire Flow Report

A4

Label	Elevation (ft)	Satisfies Fire Flow Constraints?	Base Flow (gpm)	Needed Fire Flow (gpm)	Available Fire Flow (gpm)	Residual Pressure (psi)	Calculated Residual Pressure (psi)	Minimum System Pressure (psi)	Calculated Minimum System Pressure (psi)	Minimum System Junction
J26	52.00	true	6.14	1,000.00	1,500.00	20.00	40.54	20.00	21.40	J-95
J27	50.00	true	6.14	1,000.00	1,500.00	20.00	40.87	20.00	21.40	J-95
J28	50.00	true	6.14	1,000.00	1,500.00	20.00	40.66	20.00	21.39	J-95
J29	55.00	true	6.14	1,000.00	1,500.00	20.00	37.92	20.00	21.36	J-95
J30	56.00	true	6.14	1,000.00	1,500.00	20.00	33.93	20.00	21.34	J-95
J31	55.00	true	6.14	1,000.00	1,500.00	20.00	40.57	20.00	21.27	J-95
J32	55.00	true	6.14	1,000.00	1,500.00	20.00	38.67	20.00	21.24	J-95
J33	50.00	true	6.14	1,000.00	1,500.00	20.00	39.53	20.00	21.24	J-95
J34	52.00	true	6.14	1,000.00	1,500.00	20.00	38.95	20.00	21.34	J-95
J35	53.00	true	5.88	1,000.00	1,500.00	20.00	38.26	20.00	21.32	J-95
J36	54.00	true	6.14	1,000.00	1,500.00	20.00	37.46	20.00	21.31	J-95
J37	53.00	true	6.14	1,000.00	1,500.00	20.00	37.59	20.00	21.30	J-95
J38	50.00	true	6.14	1,000.00	1,500.00	20.00	38.65	20.00	21.29	J-95
J39	50.00	true	6.14	1,000.00	1,500.00	20.00	37.89	20.00	21.30	J-95
J40	55.00	true	6.14	1,000.00	1,500.00	20.00	26.32	20.00	21.31	J-95
J41	53.00	true	6.14	1,000.00	1,474.06	20.00	20.00	20.00	20.17	J166
J42	56.00	true	6.14	1,000.00	1,500.00	20.00	32.47	20.00	21.35	J-95
J43	43.00	true	6.14	1,000.00	1,500.00	20.00	41.74	20.00	21.28	J-95
J44	51.00	true	6.14	1,000.00	1,500.00	20.00	38.17	20.00	21.28	J-95
J45	51.00	true	6.14	1,000.00	1,500.00	20.00	38.03	20.00	21.28	J-95
J46	47.00	true	6.14	1,000.00	1,500.00	20.00	39.45	20.00	21.28	J-95
J47	43.00	true	6.14	1,000.00	1,500.00	20.00	41.45	20.00	21.27	J-95
J48	48.00	true	6.14	1,000.00	1,500.00	20.00	36.03	20.00	21.27	J-95
J49	40.00	true	6.14	1,000.00	1,500.00	20.00	42.43	20.00	21.26	J-95
J50	47.00	true	6.14	1,000.00	1,500.00	20.00	36.61	20.00	21.27	J-95
J51	35.00	true	6.14	1,000.00	1,500.00	20.00	44.28	20.00	21.25	J-95
J52	35.00	true	6.14	1,000.00	1,500.00	20.00	43.87	20.00	21.24	J-95
J53	45.00	true	6.14	1,000.00	1,500.00	20.00	37.73	20.00	21.23	J-95
J54	52.00	true	6.14	1,000.00	1,314.30	20.00	20.00	20.00	21.44	J-95
J55	62.00	true	6.14	1,000.00	1,500.00	20.00	31.52	20.00	21.18	J-95
J56	58.00	true	6.14	1,000.00	1,500.00	20.00	32.81	20.00	21.17	J-95
J57	51.00	true	6.14	1,000.00	1,500.00	20.00	35.35	20.00	21.18	J-95
J58	60.00	true	6.14	1,000.00	1,500.00	20.00	34.49	20.00	21.15	J-95
J59	57.00	true	6.14	1,000.00	1,500.00	20.00	35.48	20.00	21.07	J-95
J60	63.00	true	6.14	1,000.00	1,500.00	20.00	34.20	20.00	21.05	J-95
J61	66.00	true	4.44	1,000.00	1,500.00	20.00	34.85	20.00	21.05	J-95
J62	70.00	false	6.14	1,000.00	958.31	20.00	20.00	20.00	20.00	J218
J63	20.00	true	6.14	1,000.00	1,500.00	20.00	44.39	20.00	21.58	J-95
J64	64.00	true	6.14	1,000.00	1,500.00	20.00	35.35	20.00	21.08	J-95
J65	70.00	true	6.14	1,000.00	1,500.00	20.00	33.55	20.00	21.04	J-95
J66	60.00	true	6.14	1,000.00	1,500.00	20.00	36.88	20.00	21.08	J-95
J67	55.00	true	6.14	1,000.00	1,500.00	20.00	32.66	20.00	21.18	J-95
J68	60.00	false	6.14	1,000.00	750.50	20.00	20.00	20.00	22.10	J-95
J69	62.00	true	6.14	1,000.00	1,500.00	20.00	24.30	20.00	21.15	J-95
J70	62.00	true	6.14	1,000.00	1,500.00	20.00	31.48	20.00	21.18	J-95
J71	60.00	true	6.14	1,000.00	1,500.00	20.00	33.33	20.00	21.18	J-95
J72	70.00	true	6.14	1,000.00	1,207.61	20.00	24.34	20.00	20.00	J73
J73	80.00	false	6.14	1,000.00	540.97	20.00	20.00	20.00	22.31	J-95
J74	68.00	true	6.14	1,000.00	1,500.00	20.00	24.14	20.00	21.07	J-95
J75	65.00	true	6.14	1,000.00	1,500.00	20.00	35.12	20.00	21.07	J-95

Scenario: WSP Year 2013
Fire Flow Analysis
Fire Flow Report

A4

Label	Elevation (ft)	Satisfies Fire Flow Constraints?	Base Flow (gpm)	Needed Fire Flow (gpm)	Available Fire Flow (gpm)	Residual Pressure (psi)	Calculated Residual Pressure (psi)	Minimum System Pressure (psi)	Calculated Minimum System Pressure (psi)	Minimum System Junction
J76	72.00	false	6.14	1,000.00	594.23	20.00	20.00	20.00	22.25	J-95
J77	60.00	true	6.14	1,000.00	1,500.00	20.00	28.14	20.00	21.11	J-95
J78	63.00	true	6.14	1,000.00	1,500.00	20.00	32.87	20.00	21.18	J-95
J79	63.00	true	6.14	1,000.00	1,500.00	20.00	27.22	20.00	21.18	J-95
J80	160.00	true	3.16	1,000.00	1,500.00	20.00	62.96	20.00	22.78	J-95
J81	130.00	true	0.40	1,000.00	1,500.00	20.00	73.40	20.00	22.80	J-95
J82	125.00	true	0.40	1,000.00	1,500.00	20.00	74.86	20.00	22.80	J-95
J83	110.00	true	4.44	1,000.00	1,500.00	20.00	57.22	20.00	22.80	J-95
J84	65.00	true	4.44	1,000.00	1,500.00	20.00	92.78	20.00	22.80	J-95
J85	100.00	true	4.44	1,000.00	1,500.00	20.00	75.27	20.00	22.80	J-95
J86	102.00	true	4.44	1,000.00	1,500.00	20.00	71.09	20.00	22.80	J-95
J87	95.00	true	4.44	1,000.00	1,500.00	20.00	71.13	20.00	22.80	J-95
J88	80.00	true	4.44	1,000.00	1,500.00	20.00	74.55	20.00	22.80	J-95
J89	60.00	true	4.44	1,000.00	1,500.00	20.00	57.62	20.00	22.80	J-95
J91	70.00	true	4.44	1,000.00	1,500.00	20.00	78.86	20.00	22.80	J-95
J92	85.00	true	4.44	1,000.00	1,500.00	20.00	75.92	20.00	22.80	J-95
J93	100.00	true	6.14	1,000.00	1,500.00	20.00	75.35	20.00	22.80	J-95
J99	75.00	true	6.14	1,000.00	1,500.00	20.00	35.00	20.00	21.92	J-95
J100	250.00	true	4.90	1,000.00	1,457.82	20.00	66.81	20.00	20.00	J-35
J101	260.00	true	4.90	1,000.00	1,500.00	20.00	63.12	20.00	20.71	J-35
J102	290.00	true	4.90	1,000.00	1,500.00	20.00	60.55	20.00	21.38	J-94
J103	280.00	true	1.58	1,000.00	1,333.83	20.00	20.00	20.00	21.42	J-94
J104	255.00	true	4.90	1,000.00	1,325.81	20.00	68.37	20.00	20.00	J-35
J105	260.00	true	4.90	1,000.00	1,307.65	20.00	66.56	20.00	20.00	J-35
J106	205.00	true	1.58	1,000.00	1,326.63	20.00	80.83	20.00	20.00	J-35
J107	275.00	true	4.90	1,000.00	1,026.40	20.00	64.82	20.00	20.00	J-35
J108	325.00	true	4.90	1,000.00	1,500.00	20.00	48.95	20.00	21.38	J-94
J140	70.00	false	6.14	1,000.00	680.73	20.00	20.00	20.00	22.20	J-95
J141	75.00	false	6.14	1,000.00	608.67	20.00	20.00	20.00	22.28	J-95
J142	62.00	true	6.14	1,000.00	1,433.87	20.00	20.00	20.00	21.27	J-95
J143	55.00	false	6.14	1,000.00	73.23	20.00	20.00	20.00	22.84	J-95
J144	58.00	true	6.14	1,000.00	1,500.00	20.00	34.60	20.00	21.20	J-95
J145	58.00	true	6.14	1,000.00	1,500.00	20.00	27.07	20.00	21.20	J-95
J146	56.00	true	6.14	1,000.00	1,116.15	20.00	20.00	20.00	20.22	J143
J147	56.00	true	6.14	1,000.00	1,500.00	20.00	35.28	20.00	21.21	J-95
J148	55.00	true	6.14	1,000.00	1,500.00	20.00	26.17	20.00	21.20	J-95
J149	56.00	true	6.14	1,000.00	1,500.00	20.00	30.99	20.00	21.20	J-95
J150	53.00	true	6.14	1,000.00	1,500.00	20.00	36.35	20.00	21.21	J-95
J151	52.00	true	6.14	1,000.00	1,430.95	20.00	20.00	20.00	21.31	J-95
J152	52.00	true	6.14	1,000.00	1,500.00	20.00	32.02	20.00	21.22	J-95
J153	50.00	true	6.14	1,000.00	1,115.20	20.00	20.00	20.00	21.71	J-95
J154	52.00	true	6.14	1,000.00	1,244.98	20.00	20.00	20.00	21.52	J-95
J155	35.00	true	6.14	1,000.00	1,500.00	20.00	35.99	20.00	21.25	J-95
J156	53.00	true	6.14	1,000.00	1,134.34	20.00	20.00	20.00	21.66	J-95
J157	53.00	true	6.14	1,000.00	1,500.00	20.00	23.66	20.00	21.17	J-95
J158	50.00	true	6.14	1,000.00	1,500.00	20.00	36.97	20.00	21.32	J-95
J159	50.00	true	6.14	1,000.00	1,500.00	20.00	37.22	20.00	21.20	J-95
J160	57.00	true	9.40	1,000.00	1,500.00	20.00	22.56	20.00	21.24	J-95
J161	56.00	true	6.14	1,000.00	1,500.00	20.00	38.31	20.00	21.25	J-95
J162	50.00	true	6.14	1,000.00	1,500.00	20.00	39.15	20.00	21.26	J-95

Scenario: WSP Year 2013
Fire Flow Analysis
Fire Flow Report

A4

Label	Elevation (ft)	Satisfies Fire Flow Constraints?	Base Flow (gpm)	Needed Fire Flow (gpm)	Available Fire Flow (gpm)	Residual Pressure (psi)	Calculated Residual Pressure (psi)	Minimum System Pressure (psi)	Calculated Minimum System Pressure (psi)	Minimum System Junction
J163	50.00	true	6.14	1,000.00	1,500.00	20.00	25.45	20.00	21.32	J-95
J164	50.00	true	6.14	1,000.00	1,500.00	20.00	43.50	20.00	21.40	J-95
J165	45.00	true	6.14	1,000.00	1,500.00	20.00	43.14	20.00	21.40	J-95
J166	53.00	true	6.14	1,000.00	1,235.63	20.00	20.00	20.00	21.63	J-95
J167	30.00	true	6.14	1,000.00	1,500.00	20.00	48.93	20.00	21.46	J-95
J168	20.00	true	6.14	1,000.00	1,500.00	20.00	46.38	20.00	21.59	J-95
J169	20.00	true	6.14	1,000.00	1,500.00	20.00	34.85	20.00	21.59	J-95
J170	30.00	true	6.14	1,000.00	1,500.00	20.00	34.80	20.00	21.69	J-95
J171	20.00	false	6.14	1,000.00	801.79	20.00	20.00	20.00	22.30	J-95
J172	30.00	true	6.14	1,000.00	1,500.00	20.00	35.49	20.00	21.69	J-95
J173	30.00	true	0.40	1,000.00	1,500.00	20.00	28.25	20.00	21.69	J-95
J174	50.00	true	6.14	1,000.00	1,500.00	20.00	37.64	20.00	21.69	J-95
J175	50.00	true	6.14	1,000.00	1,500.00	20.00	37.68	20.00	21.69	J-95
J176	65.00	true	6.14	1,000.00	1,500.00	20.00	34.60	20.00	22.13	J-95
J177	75.00	true	6.14	1,000.00	1,135.70	20.00	24.45	20.00	20.00	J730
J178	45.00	false	6.14	1,000.00	845.44	20.00	20.00	20.00	22.36	J-95
J179	80.00	true	6.14	1,000.00	1,500.00	20.00	82.63	20.00	22.64	J-95
J180	145.00	true	0.00	1,000.00	1,500.00	20.00	75.22	20.00	22.64	J-95
J181	145.00	true	0.00	1,000.00	1,500.00	20.00	75.43	20.00	22.64	J-95
J182	165.00	true	4.44	1,000.00	1,500.00	20.00	63.56	20.00	22.77	J-95
J183	175.00	true	0.00	1,000.00	1,500.00	20.00	57.91	20.00	22.78	J-95
J184	185.00	true	4.90	1,000.00	1,500.00	20.00	59.84	20.00	21.33	J-35
J185	135.00	true	4.44	1,000.00	1,500.00	20.00	71.22	20.00	22.80	J-95
J186	135.00	true	2.77	1,000.00	1,500.00	20.00	59.41	20.00	22.79	J-95
J187	115.00	true	3.16	1,000.00	1,500.00	20.00	74.33	20.00	22.79	J-95
J188	115.00	true	4.44	1,000.00	1,500.00	20.00	75.15	20.00	22.80	J-95
J189	130.00	true	4.44	1,000.00	1,500.00	20.00	72.70	20.00	22.80	J-95
J190	105.00	true	4.44	1,000.00	1,500.00	20.00	75.01	20.00	22.80	J-95
J191	110.00	true	4.44	1,000.00	1,500.00	20.00	67.17	20.00	22.80	J-95
J192	95.00	true	4.44	1,000.00	1,500.00	20.00	69.40	20.00	22.80	J-95
J193	100.00	true	4.44	1,000.00	1,500.00	20.00	83.70	20.00	22.80	J-95
J194	95.00	true	4.44	1,000.00	1,500.00	20.00	78.30	20.00	22.80	J-95
J195	125.00	true	4.44	1,000.00	1,500.00	20.00	70.40	20.00	22.80	J-95
J196	80.00	true	4.44	1,000.00	1,500.00	20.00	74.92	20.00	22.80	J-95
J197	95.00	true	4.44	1,000.00	1,500.00	20.00	81.25	20.00	22.64	J-95
J198	90.00	true	4.44	1,000.00	1,500.00	20.00	82.93	20.00	22.64	J-95
J199	75.00	true	4.44	1,000.00	1,500.00	20.00	87.30	20.00	22.64	J-95
J200	73.00	true	4.44	1,000.00	1,500.00	20.00	87.84	20.00	22.64	J-95
J201	72.00	true	4.44	1,000.00	1,500.00	20.00	88.28	20.00	22.64	J-95
J202	80.00	true	4.44	1,000.00	1,500.00	20.00	86.08	20.00	22.64	J-95
J203	80.00	true	4.44	1,000.00	1,500.00	20.00	85.06	20.00	22.64	J-95
J204	70.00	true	4.44	1,000.00	1,500.00	20.00	87.16	20.00	22.64	J-95
J205	80.00	true	4.44	1,000.00	1,500.00	20.00	83.24	20.00	22.64	J-95
J206	150.00	true	4.44	1,000.00	1,500.00	20.00	41.69	20.00	22.64	J-95
J207	245.00	true	4.90	1,000.00	1,349.91	20.00	71.69	20.00	20.00	J-35
J208	255.00	false	3.16	1,000.00	975.27	20.00	28.69	20.00	20.00	J-33
J209	300.00	true	4.90	1,000.00	1,270.17	20.00	20.00	20.00	21.43	J-94
J210	285.00	false	2.37	1,000.00	947.24	20.00	61.18	20.00	20.00	J-35
J211	135.00	false	1.19	1,000.00	922.73	20.00	124.94	20.00	20.00	J-35
J212	255.00	true	5.13	1,000.00	1,082.03	20.00	72.35	20.00	20.00	J-35

Scenario: WSP Year 2013
Fire Flow Analysis
Fire Flow Report

A4

Label	Elevation (ft)	Satisfies Fire Flow Constraints?	Base Flow (gpm)	Needed Fire Flow (gpm)	Available Fire Flow (gpm)	Residual Pressure (psi)	Calculated Residual Pressure (psi)	Minimum System Pressure (psi)	Calculated Minimum System Pressure (psi)	Minimum System Junction
J213	175.00	true	3.95	1,000.00	1,327.67	20.00	93.76	20.00	20.00	J-35
J214	140.00	true	2.37	1,000.00	1,327.67	20.00	70.57	20.00	20.00	J-35
J215	135.00	true	4.90	1,000.00	1,326.63	20.00	80.88	20.00	20.00	J-35
J216	110.00	true	3.56	1,000.00	1,261.34	20.00	20.00	20.00	20.76	J-35
J217	0.00	true	0.00	1,000.00	1,500.00	20.00	72.10	20.00	22.67	J-95
J218	70.00	false	1.58	1,000.00	890.96	20.00	20.00	20.00	21.86	J-95
J219	70.00	true	0.40	1,000.00	1,500.00	20.00	71.38	20.00	22.80	J-95
J220	72.00	true	0.40	1,000.00	1,500.00	20.00	34.94	20.00	21.61	J-95
J221	130.00	true	4.44	1,000.00	1,326.63	20.00	61.38	20.00	20.00	J-35
J222	287.00	false	0.00	1,000.00	922.73	20.00	60.24	20.00	20.00	J-35
J400	275.00	true	4.90	1,000.00	1,500.00	20.00	65.94	20.00	21.38	J-94
J402	310.00	true	4.90	1,000.00	1,024.26	20.00	48.89	20.00	20.00	J-35
J403	215.00	true	3.26	1,000.00	1,371.37	20.00	83.87	20.00	20.00	J-35
J404	175.00	true	0.40	1,000.00	1,371.37	20.00	97.30	20.00	20.00	J-35
J501	30.00	true	6.14	1,000.00	1,500.00	20.00	47.14	20.00	21.61	J-95
J502	20.00	true	6.14	1,000.00	1,500.00	20.00	52.93	20.00	21.49	J-95
J503	35.00	true	6.14	1,000.00	1,500.00	20.00	46.95	20.00	21.43	J-95
J504	35.00	true	6.14	1,000.00	1,500.00	20.00	46.97	20.00	21.42	J-95
J505	50.00	true	6.14	1,000.00	1,500.00	20.00	40.67	20.00	21.40	J-95
J506	40.00	true	6.14	1,000.00	1,500.00	20.00	44.80	20.00	21.41	J-95
J507	55.00	true	6.14	1,000.00	1,500.00	20.00	30.84	20.00	21.36	J-95
J508	55.00	true	6.14	1,000.00	1,500.00	20.00	31.87	20.00	21.38	J-95
J509	55.00	true	6.14	1,000.00	1,500.00	20.00	38.10	20.00	21.38	J-95
J510	52.00	true	6.14	1,000.00	1,500.00	20.00	39.06	20.00	21.24	J-95
J511	48.00	true	6.14	1,000.00	1,500.00	20.00	37.52	20.00	21.28	J-95
J512	56.00	true	6.14	1,000.00	1,500.00	20.00	34.01	20.00	21.34	J-95
J513	48.00	true	6.14	1,000.00	1,299.33	20.00	21.41	20.00	20.00	J515
J514	51.00	true	6.14	1,000.00	1,297.27	20.00	20.27	20.00	20.00	J515
J515	52.00	true	6.14	1,000.00	1,295.21	20.00	20.00	20.00	20.48	J514
J516	48.00	false	6.14	1,000.00	843.86	20.00	20.00	20.00	22.07	J-95
J517	46.00	true	6.14	1,000.00	1,500.00	20.00	40.41	20.00	21.29	J-95
J518	52.00	true	6.14	1,000.00	1,500.00	20.00	37.02	20.00	21.29	J-95
J519	52.00	true	6.14	1,000.00	1,500.00	20.00	29.01	20.00	21.30	J-95
J520	48.00	true	6.14	1,000.00	1,500.00	20.00	37.74	20.00	21.27	J-95
J602	0.00	true	0.00	1,000.00	1,500.00	20.00	137.21	20.00	22.84	J-95
J604	0.00	true	0.00	1,000.00	1,500.00	20.00	73.60	20.00	22.58	J-95
J610	50.00	true	0.40	1,000.00	1,290.04	20.00	48.18	20.00	20.00	J-95
J611	50.00	true	6.30	1,000.00	1,500.00	20.00	47.13	20.00	22.17	J-95
J612	50.00	true	3.16	1,000.00	1,500.00	20.00	48.86	20.00	22.45	J-95
J700	50.00	false	2.77	1,000.00	789.61	20.00	35.27	20.00	20.00	J730
J710	62.00	false	3.16	1,000.00	641.54	20.00	30.06	20.00	20.00	J730
J720	85.00	false	3.95	1,000.00	323.45	20.00	20.04	20.00	20.00	J730
J730	85.00	false	4.44	1,000.00	240.11	20.00	20.00	20.00	22.86	J-95
J740	70.00	false	5.13	1,000.00	240.11	20.00	20.75	20.00	20.00	J730
J750	30.00	false	0.49	1,000.00	228.68	20.00	34.74	20.00	20.00	J760
J760	64.00	false	1.58	1,000.00	205.76	20.00	20.00	20.00	22.87	J-95
J770	60.00	false	4.34	1,000.00	228.68	20.00	20.15	20.00	20.00	J760
J780	40.00	false	3.16	1,000.00	482.75	20.00	22.17	20.00	20.00	J795
J790	45.00	false	2.37	1,000.00	440.88	20.00	20.00	20.00	20.00	J795
J795	45.00	false	0.40	1,000.00	415.62	20.00	20.00	20.00	22.81	J-95

Scenario: WSP Year 2013
Fire Flow Analysis
Fire Flow Report

A4

Label	Elevation (ft)	Satisfies Fire Flow Constraints?	Base Flow (gpm)	Needed Fire Flow (gpm)	Available Fire Flow (gpm)	Residual Pressure (psi)	Calculated Residual Pressure (psi)	Minimum System Pressure (psi)	Calculated Minimum System Pressure (psi)	Minimum System Junction
J800	30.00	true	0.40	1,000.00	1,413.53	20.00	25.21	20.00	20.00	J910
J810	25.00	true	0.40	1,000.00	1,289.06	20.00	27.37	20.00	20.00	J910
J820	25.00	true	1.58	1,000.00	1,085.79	20.00	27.37	20.00	20.00	J910
J830	30.00	false	1.19	1,000.00	857.48	20.00	25.20	20.00	20.00	J910
J840	30.00	false	0.79	1,000.00	840.76	20.00	24.34	20.00	20.00	J-96
J860	32.00	false	1.58	1,000.00	821.93	20.00	24.34	20.00	20.00	J910
J870	35.00	false	1.19	1,000.00	789.02	20.00	20.00	20.00	21.98	J910
J880	32.00	false	0.40	1,000.00	766.90	20.00	22.83	20.00	20.00	J910
J890	35.00	false	1.58	1,000.00	766.90	20.00	23.04	20.00	20.00	J910
J900	40.00	false	1.58	1,000.00	703.71	20.00	20.87	20.00	20.00	J910
J910	42.00	false	0.40	1,000.00	687.14	20.00	20.00	20.00	22.05	J900

Scenario: WSP Year 2007 (BASE)
Steady State Analysis
Junction Report

B1
2007 PHD

Label	Zone	Elevation (ft)	Type	Base Flow (gpm)	Calculated Hydraulic Grade (ft)	Pressure (psi)
J2060	1	250.00	Demand	2.78	329.10	34.29
J3110	1	250.00	Demand	0.70	329.10	34.29
J3043	330	240.00	Demand	1.15	329.10	38.62
J220	330	235.00	Demand	4.63	328.70	40.62
J240	99	230.00	Demand	1.39	327.98	42.47
J2070	1	230.00	Demand	1.39	329.10	42.96
J210	99	230.00	Demand	1.39	329.12	42.97
J200	330	230.00	Demand	1.39	329.71	43.23
J190	330	230.00	Demand	1.39	329.71	43.23
J-16	Zone-1	230.00	Demand	0.00	329.74	43.24
J4030	330	230.00	Demand	0.00	329.75	43.24
J10	330	20.00	Demand	0.00	119.98	43.34
J230	1	225.00	Demand	1.39	328.23	44.75
J180	1	220.00	Demand	1.39	329.71	47.56
J175	1	220.00	Demand	0.58	329.71	47.56
J2110	1	215.00	Demand	6.96	329.10	49.46
J360	99	205.00	Demand	6.96	329.10	53.80
J350	99	205.00	Demand	13.92	329.12	53.81
J250	1	200.00	Demand	1.39	327.63	55.33
J340	2	200.00	Demand	13.92	329.15	55.99
J170	2	195.00	Demand	13.92	329.72	58.40
J3010	1	260.00	Demand	3.48	399.15	60.32
J720	2	185.00	Demand	0.70	329.72	62.74
J2120	1	180.00	Demand	6.96	329.09	64.64
J2050	1	250.00	Demand	6.26	399.44	64.79
J3030	360	245.00	Demand	4.03	399.05	66.78
J330	2	175.00	Demand	13.92	329.34	66.91
J265	330	170.00	Demand	383.80	326.81	67.98
J260	1	170.00	Demand	0.00	327.32	68.20
J3054	1	240.00	Demand	1.15	398.97	68.92
J3045	360	240.00	Demand	10.15	398.98	68.92
J3040	360	240.00	Demand	0.78	398.99	68.93
J3050	1	240.00	Demand	3.48	399.01	68.93
J3055	1	235.00	Demand	0.00	398.97	71.08
J2040	1	235.00	Demand	6.96	399.49	71.31
J2170	1	230.00	Demand	2.78	398.97	73.25
J3060	1	230.00	Demand	3.48	398.97	73.25
J750	1	230.00	Demand	10.44	398.97	73.25
J2160	1	230.00	Demand	2.78	398.97	73.25
J3057	330	230.00	Demand	0.00	398.98	73.26
J3020	1	230.00	Demand	3.48	399.14	73.33
J2100	1	230.00	Demand	6.96	399.49	73.48
J730	1	230.00	Demand	0.70	399.85	73.63
J4060	360	230.00	Demand	0.00	399.85	73.63
J-17	Zone-1	230.00	Demand	0.00	400.03	73.71
J2230	1	225.00	Demand	0.70	398.97	75.42
J245	1	225.00	Demand	0.00	398.97	75.42
J225	360	225.00	Demand	0.00	398.97	75.42
J2090	1	225.00	Demand	3.48	399.52	75.66
J2080	1	225.00	Demand	5.57	399.52	75.66
J740	1	225.00	Demand	6.96	399.85	75.80
J2180	1	220.00	Demand	3.48	398.97	77.59

Scenario: WSP Year 2007 (BASE)
Steady State Analysis
Junction Report

B1
2007 PHD

Label	Zone	Elevation (ft)	Type	Base Flow (gpm)	Calculated Hydraulic Grade (ft)	Pressure (psi)
BB-Semiahmoo	330	20.00	Demand	50.00	319.08	129.66
J-2	330	20.00	Demand	1.15	331.33	134.97
J-3	330	20.00	Demand	0.00	331.22	134.92
J-5	330	20.00	Demand	0.00	331.22	134.92
J-6	330	20.00	Demand	0.00	331.22	134.92
J-7	330	20.00	Demand	0.00	331.22	134.92
J-8	330	20.00	Demand	0.00	331.22	134.92
J-9	330	20.00	Demand	0.00	331.22	134.92
J-10	330	20.00	Demand	0.00	331.08	134.86
J-11	330	20.00	Demand	7.48	331.08	134.86
J-12	330	20.00	Demand	5.75	331.08	134.86
J-13	330	20.00	Demand	5.75	331.08	134.86
J-16	Zone-1	230.00	Demand	0.00	329.74	43.24
J-17	Zone-1	230.00	Demand	0.00	400.03	73.71
J-18	Zone-1	230.00	Demand	0.00	470.68	104.34
J10	330	20.00	Demand	0.00	119.98	43.34
J100	330	20.00	Demand	0.00	331.33	134.97
J110	2	20.00	Demand	13.92	331.27	134.94
J120	2	20.00	Demand	1.39	330.36	134.55
J130	2	85.00	Demand	1.39	330.13	106.27
J135	330	75.00	Demand	6.77	329.91	110.51
J138	330	75.00	Demand	6.77	329.91	110.51
J140	2	80.00	Demand	13.92	329.84	108.31
J150	2	120.00	Demand	1.39	329.77	90.94
J160	2	145.00	Demand	13.92	329.73	80.08
J170	2	195.00	Demand	13.92	329.72	58.40
J175	1	220.00	Demand	0.58	329.71	47.56
J180	1	220.00	Demand	1.39	329.71	47.56
J190	330	230.00	Demand	1.39	329.71	43.23
J200	330	230.00	Demand	1.39	329.71	43.23
J210	99	230.00	Demand	1.39	329.12	42.97
J220	330	235.00	Demand	4.63	328.70	40.62
J225	360	225.00	Demand	0.00	398.97	75.42
J230	1	225.00	Demand	1.39	328.23	44.75
J240	99	230.00	Demand	1.39	327.98	42.47
J245	1	225.00	Demand	0.00	398.97	75.42
J250	1	200.00	Demand	1.39	327.63	55.33
J260	1	170.00	Demand	0.00	327.32	68.20
J265	330	170.00	Demand	383.80	326.81	67.98
J270	2	80.00	Demand	1.39	329.82	108.30
J280	2	140.00	Demand	3.48	329.74	82.26
J290	2	120.00	Demand	10.44	329.69	90.90
J300	2	125.00	Demand	6.96	329.60	88.70
J310	2	150.00	Demand	6.96	329.72	77.91
J320	2	150.00	Demand	13.92	329.70	77.91
J330	2	175.00	Demand	13.92	329.34	66.91
J340	2	200.00	Demand	13.92	329.15	55.99
J350	99	205.00	Demand	13.92	329.12	53.81
J360	99	205.00	Demand	6.96	329.10	53.80
J370	2	140.00	Demand	13.92	329.11	81.98
J380	2	70.00	Demand	13.92	329.09	112.32
J390	2	125.00	Demand	0.70	329.09	88.48

Scenario: WSP Year 2007 (BASE)
Steady State Analysis
Junction Report

B1

Label	Zone	Elevation (ft)	Type	Base Flow (gpm)	Calculated Hydraulic Grade (ft)	Pressure (psi)
J400	2	85.00	Demand	0.70	329.09	105.82
J650	2	125.00	Demand	17.40	329.75	88.76
J660	2	90.00	Demand	8.35	329.77	103.94
J670	2	85.00	Demand	10.44	329.79	106.12
J680	2	125.00	Demand	2.30	329.75	88.76
J685	Zone-1	125.00	Demand	1.73	329.74	88.76
J686	Zone-1	120.00	Demand	2.30	329.74	90.93
J690	2	130.00	Demand	2.30	329.73	86.59
J710	2	110.00	Demand	0.70	329.77	95.27
J720	2	185.00	Demand	0.70	329.72	62.74
J730	1	230.00	Demand	0.70	399.85	73.63
J740	1	225.00	Demand	6.96	399.85	75.80
J750	1	230.00	Demand	10.44	398.97	73.25
J2000	1	220.00	Demand	6.96	399.72	77.91
J2010	1	210.00	Demand	4.18	399.72	82.25
J2020	1	210.00	Demand	1.39	399.71	82.25
J2030	1	220.00	Demand	6.96	399.53	77.83
J2040	1	235.00	Demand	6.96	399.49	71.31
J2050	1	250.00	Demand	6.26	399.44	64.79
J2060	1	250.00	Demand	2.78	329.10	34.29
J2070	1	230.00	Demand	1.39	329.10	42.96
J2080	1	225.00	Demand	5.57	399.52	75.66
J2090	1	225.00	Demand	3.48	399.52	75.66
J2100	1	230.00	Demand	6.96	399.49	73.48
J2110	1	215.00	Demand	6.96	329.10	49.46
J2120	1	180.00	Demand	6.96	329.09	64.64
J2130	1	150.00	Demand	6.96	329.09	77.64
J2140	1	215.00	Demand	6.96	398.97	79.76
J2150	1	210.00	Demand	2.78	398.97	81.92
J2160	1	230.00	Demand	2.78	398.97	73.25
J2170	1	230.00	Demand	2.78	398.97	73.25
J2180	1	220.00	Demand	3.48	398.97	77.59
J2190	1	215.00	Demand	2.78	398.97	79.75
J2200	1	215.00	Demand	3.48	398.96	79.75
J2210	1	215.00	Demand	6.96	398.96	79.75
J2220	1	210.00	Demand	6.96	398.96	81.92
J2230	1	225.00	Demand	0.70	398.97	75.42
J2240	1	215.00	Demand	1.39	399.44	79.96
J2250	1	200.00	Demand	0.70	399.44	86.46
J3010	1	260.00	Demand	3.48	399.15	60.32
J3020	1	230.00	Demand	3.48	399.14	73.33
J3030	360	245.00	Demand	4.03	399.05	66.78
J3040	360	240.00	Demand	0.78	398.99	68.93
J3043	330	240.00	Demand	1.15	329.10	38.62
J3045	360	240.00	Demand	10.15	398.98	68.92
J3050	1	240.00	Demand	3.48	399.01	68.93
J3054	1	240.00	Demand	1.15	398.97	68.92
J3055	1	235.00	Demand	0.00	398.97	71.08
J3057	330	230.00	Demand	0.00	398.98	73.26
J3060	1	230.00	Demand	3.48	398.97	73.25
J3070	1	215.00	Demand	5.57	398.96	79.75
J3080	1	210.00	Demand	3.48	398.96	81.92

Scenario: WSP Year 2007 (BASE)
Steady State Analysis
Junction Report

B 1

Label	Zone	Elevation (ft)	Type	Base Flow (gpm)	Calculated Hydraulic Grade (ft)	Pressure (psi)
J3090	1	205.00	Demand	5.57	398.96	84.09
J3100	1	200.00	Demand	4.18	398.96	86.25
J3110	1	250.00	Demand	0.70	329.10	34.29
J4030	330	230.00	Demand	0.00	329.75	43.24
J4050	360	220.00	Demand	0.00	399.79	77.94
J4060	360	230.00	Demand	0.00	399.85	73.63

Scenario: WSP Year 2007 (BASE)
Steady State Analysis
Pump Report

B1

Label	Elevation (ft)	Shutoff Head (ft)	Shutoff Discharge (gpm)	Design Head (ft)	Design Discharge (gpm)	Maximum Operating Head (ft)	Maximum Operating Discharge (gpm)	Control Status	Intake Pump Grade (ft)	Discharge Pump Grade (ft)	Discharge (gpm)	Pump Head (ft)
400Z P1	230.00	176.00	0.00	132.00	1,000.00	0.00	2,000.00	Off	329.74	470.68	0.00	0.00
400Z P2	230.00	146.67	0.00	110.00	400.00	0.00	800.00	On	329.73	470.72	157.40	140.99
PS3-1	20.00	212.90	0.00	199.00	800.00	156.40	1,314.80	On	119.98	331.33	367.91	211.35
PS3-2	20.00	215.00	0.00	199.00	800.00	156.40	1,314.80	Off	119.98	331.33	0.00	0.00
PS4- 2	250.00	480.00	0.00	360.00	120.00	0.00	240.00	Off	329.10	364.27	0.00	0.00
PS4-1	250.00	105.00	0.00	95.00	110.00	90.00	135.00	Off	329.10	364.27	0.00	0.00

Scenario: WSP Year 2007 (BASE)
Steady State Analysis
Tank Report

B 1

Label	Zone	Base Elevation (ft)	Minimum Elevation (ft)	Initial HGL (ft)	Maximum Elevation (ft)	Inactive Volume (gal)	Tank Diameter (ft)	Inflow (gpm)	Current Status	Calculated Hydraulic Grade (ft)	Calculated Percent Full (%)
330 RES	330	242.00	312.00	330.00	330.00	0.00	10.00	-525.99	Draining	330.00	100.0

Scenario: WSP Year 2007 (BASE)
Steady State Analysis
Valve Report

B1

Label	Elevation (ft)	Initial Pressure (psi)	Initial HGL (ft)	Diameter (in)	Control Status	Discharge (gpm)	From HGL (ft)	To HGL (ft)	Headloss (ft)
PRV-1	250.00	30.00	319.18	6.0	Closed	0.00	399.44	329.10	0.00
PRV-2	230.00	73.72	400.00	6.0	Throttling	157.40	470.64	400.06	70.58

Scenario: WSP Year 2013
Steady State Analysis
Junction Report

B2
2013 PHD

Label	Zone	Elevation (ft)	Type	Base Flow (gpm)	Calculated Hydraulic Grade (ft)	Pressure (psi)
J2060	1	250.00	Demand	4.89	327.84	33.74
J3110	1	250.00	Demand	1.22	327.84	33.74
J3043	330	240.00	Demand	2.02	327.82	38.07
J220	330	235.00	Demand	8.13	328.95	40.73
J2070	1	230.00	Demand	2.44	327.84	42.41
J240	99	230.00	Demand	2.44	328.48	42.69
J210	99	230.00	Demand	2.44	329.23	43.02
J190	330	230.00	Demand	2.44	329.62	43.19
J200	330	230.00	Demand	2.44	329.62	43.19
J-16	Zone-1	230.00	Demand	0.00	329.63	43.19
J4030	330	230.00	Demand	0.00	329.66	43.21
J10	330	20.00	Demand	0.00	119.97	43.34
J230	1	225.00	Demand	2.44	328.64	44.93
J175	1	220.00	Demand	1.01	329.62	47.52
J180	1	220.00	Demand	2.44	329.62	47.52
J2110	1	215.00	Demand	12.22	327.82	48.91
J360	99	205.00	Demand	12.22	327.84	53.25
J350	99	205.00	Demand	24.45	327.88	53.27
J340	2	200.00	Demand	24.45	327.98	55.48
J250	1	200.00	Demand	2.44	328.26	55.60
J170	2	195.00	Demand	24.45	329.62	58.36
J3010	1	260.00	Demand	6.11	397.46	59.59
J720	2	185.00	Demand	1.22	329.59	62.68
J2120	1	180.00	Demand	12.22	327.82	64.08
J2050	1	250.00	Demand	11.00	398.31	64.29
J3030	360	245.00	Demand	7.07	397.19	65.98
J330	2	175.00	Demand	24.45	328.52	66.55
J3054	1	240.00	Demand	2.02	396.97	68.05
J3045	360	240.00	Demand	17.83	397.01	68.07
J3040	360	240.00	Demand	1.37	397.03	68.08
J3050	1	240.00	Demand	6.11	397.07	68.10
J265	330	170.00	Demand	300.00	327.74	68.38
J260	1	170.00	Demand	0.00	328.07	68.52
J3055	1	235.00	Demand	0.00	396.97	70.22
J2040	1	235.00	Demand	12.22	398.43	70.85
J2170	1	230.00	Demand	4.89	396.96	72.38
J3060	1	230.00	Demand	6.11	396.96	72.38
J750	1	230.00	Demand	18.33	396.96	72.38
J2160	1	230.00	Demand	4.89	396.96	72.38
J3057	330	230.00	Demand	0.00	397.00	72.40
J3020	1	230.00	Demand	6.11	397.46	72.60
J2100	1	230.00	Demand	12.22	398.45	73.03
J730	1	230.00	Demand	1.22	399.46	73.47
J4060	360	230.00	Demand	0.00	399.46	73.47
J-17	Zone-1	230.00	Demand	0.00	399.97	73.68
J2230	1	225.00	Demand	1.22	396.96	74.55
J245	1	225.00	Demand	0.00	396.97	74.55
J225	360	225.00	Demand	0.00	396.97	74.55
J2090	1	225.00	Demand	6.11	398.52	75.23
J2080	1	225.00	Demand	9.78	398.52	75.23
J740	1	225.00	Demand	12.22	399.46	75.63
J2180	1	220.00	Demand	6.11	396.95	76.71

© Haestad Methods, Inc.
CHS Engineers Inc
37 Brookside Road Waterbury, CT 06708 USA +1-203-755-1666

Scenario: WSP Year 2013
Steady State Analysis
Junction Report

B2

2013 PHD

Label	Zone	Elevation (ft)	Type	Base Flow (gpm)	Calculated Hydraulic Grade (ft)	Pressure (psi)
BB-Semiahmoo	330	20.00	Demand	50.00	318.95	129.60
J-2	330	20.00	Demand	2.02	332.72	135.57
J-3	330	20.00	Demand	0.00	332.50	135.48
J-5	330	20.00	Demand	0.00	332.50	135.48
J-6	330	20.00	Demand	0.00	332.50	135.48
J-7	330	20.00	Demand	0.00	332.50	135.48
J-8	330	20.00	Demand	0.00	332.50	135.48
J-9	330	20.00	Demand	0.00	332.50	135.48
J-10	330	20.00	Demand	0.00	332.22	135.35
J-11	330	20.00	Demand	13.13	332.21	135.35
J-12	330	20.00	Demand	10.10	332.21	135.35
J-13	330	20.00	Demand	10.10	332.21	135.35
J-16	Zone-1	230.00	Demand	0.00	329.63	43.19
J-17	Zone-1	230.00	Demand	0.00	399.97	73.68
J-18	Zone-1	230.00	Demand	0.00	458.64	99.12
J10	330	20.00	Demand	0.00	119.97	43.34
J100	330	20.00	Demand	0.00	332.72	135.57
J110	2	20.00	Demand	24.45	332.60	135.52
J120	2	20.00	Demand	2.44	330.82	134.75
J130	2	85.00	Demand	2.44	330.38	106.38
J135	330	75.00	Demand	11.88	329.95	110.53
J138	330	75.00	Demand	11.88	329.95	110.53
J140	2	80.00	Demand	24.45	329.82	108.30
J150	2	120.00	Demand	2.44	329.70	90.91
J160	2	145.00	Demand	24.45	329.62	80.04
J170	2	195.00	Demand	24.45	329.62	58.36
J175	1	220.00	Demand	1.01	329.62	47.52
J180	1	220.00	Demand	2.44	329.62	47.52
J190	330	230.00	Demand	2.44	329.62	43.19
J200	330	230.00	Demand	2.44	329.62	43.19
J210	99	230.00	Demand	2.44	329.23	43.02
J220	330	235.00	Demand	8.13	328.95	40.73
J225	360	225.00	Demand	0.00	396.97	74.55
J230	1	225.00	Demand	2.44	328.64	44.93
J240	99	230.00	Demand	2.44	328.48	42.69
J245	1	225.00	Demand	0.00	396.97	74.55
J250	1	200.00	Demand	2.44	328.26	55.60
J260	1	170.00	Demand	0.00	328.07	68.52
J265	330	170.00	Demand	300.00	327.74	68.38
J270	2	80.00	Demand	2.44	329.78	108.28
J280	2	140.00	Demand	6.11	329.65	82.22
J290	2	120.00	Demand	18.33	329.57	90.85
J300	2	125.00	Demand	12.22	329.46	88.64
J310	2	150.00	Demand	12.22	329.59	77.86
J320	2	150.00	Demand	24.45	329.55	77.84
J330	2	175.00	Demand	24.45	328.52	66.55
J340	2	200.00	Demand	24.45	327.98	55.48
J350	99	205.00	Demand	24.45	327.88	53.27
J360	99	205.00	Demand	12.22	327.84	53.25
J370	2	140.00	Demand	24.45	327.86	81.44
J380	2	70.00	Demand	24.45	327.82	111.77
J390	2	125.00	Demand	1.22	327.82	87.93

Scenario: WSP Year 2013
Steady State Analysis
Junction Report

B2

Label	Zone	Elevation (ft)	Type	Base Flow (gpm)	Calculated Hydraulic Grade (ft)	Pressure (psi)
J400	2	85.00	Demand	1.22	327.82	105.27
J650	2	125.00	Demand	30.56	329.65	88.72
J660	2	90.00	Demand	14.67	329.68	103.91
J670	2	85.00	Demand	18.33	329.72	106.09
J680	2	125.00	Demand	4.04	329.65	88.72
J685	Zone-1	125.00	Demand	3.03	329.63	88.71
J686	Zone-1	120.00	Demand	4.04	329.63	90.88
J690	2	130.00	Demand	4.04	329.61	86.53
J710	2	110.00	Demand	1.22	329.69	95.24
J720	2	185.00	Demand	1.22	329.59	62.68
J730	1	230.00	Demand	1.22	399.46	73.47
J740	1	225.00	Demand	12.22	399.46	75.63
J750	1	230.00	Demand	18.33	396.96	72.38
J2000	1	220.00	Demand	12.22	399.08	77.63
J2010	1	210.00	Demand	7.33	399.08	81.97
J2020	1	210.00	Demand	2.44	399.08	81.97
J2030	1	220.00	Demand	12.22	398.55	77.40
J2040	1	235.00	Demand	12.22	398.43	70.85
J2050	1	250.00	Demand	11.00	398.31	64.29
J2060	1	250.00	Demand	4.89	327.84	33.74
J2070	1	230.00	Demand	2.44	327.84	42.41
J2080	1	225.00	Demand	9.78	398.52	75.23
J2090	1	225.00	Demand	6.11	398.52	75.23
J2100	1	230.00	Demand	12.22	398.45	73.03
J2110	1	215.00	Demand	12.22	327.82	48.91
J2120	1	180.00	Demand	12.22	327.82	64.08
J2130	1	150.00	Demand	12.22	327.82	77.09
J2140	1	215.00	Demand	12.22	396.98	78.89
J2150	1	210.00	Demand	4.89	396.97	81.06
J2160	1	230.00	Demand	4.89	396.96	72.38
J2170	1	230.00	Demand	4.89	396.96	72.38
J2180	1	220.00	Demand	6.11	396.95	76.71
J2190	1	215.00	Demand	4.89	396.95	78.88
J2200	1	215.00	Demand	6.11	396.94	78.87
J2210	1	215.00	Demand	12.22	396.93	78.87
J2220	1	210.00	Demand	12.22	396.93	81.04
J2230	1	225.00	Demand	1.22	396.96	74.55
J2240	1	215.00	Demand	2.44	398.31	79.47
J2250	1	200.00	Demand	1.22	398.31	85.97
J3010	1	260.00	Demand	6.11	397.46	59.59
J3020	1	230.00	Demand	6.11	397.46	72.60
J3030	360	245.00	Demand	7.07	397.19	65.98
J3040	360	240.00	Demand	1.37	397.03	68.08
J3043	330	240.00	Demand	2.02	327.82	38.07
J3045	360	240.00	Demand	17.83	397.01	68.07
J3050	1	240.00	Demand	6.11	397.07	68.10
J3054	1	240.00	Demand	2.02	396.97	68.05
J3055	1	235.00	Demand	0.00	396.97	70.22
J3057	330	230.00	Demand	0.00	397.00	72.40
J3060	1	230.00	Demand	6.11	396.96	72.38
J3070	1	215.00	Demand	9.78	396.94	78.87
J3080	1	210.00	Demand	6.11	396.94	81.04

Scenario: WSP Year 2013
Steady State Analysis
Junction Report

B2

Label	Zone	Elevation (ft)	Type	Base Flow (gpm)	Calculated Hydraulic Grade (ft)	Pressure (psi)
J3090	1	205.00	Demand	9.78	396.94	83.21
J3100	1	200.00	Demand	7.33	396.94	85.38
J3110	1	250.00	Demand	1.22	327.84	33.74
J4030	330	230.00	Demand	0.00	329.66	43.21
J4050	360	220.00	Demand	0.00	399.28	77.72
J4060	360	230.00	Demand	0.00	399.46	73.47

Scenario: WSP Year 2013
Steady State Analysis
Pump Report

B2

Label	Elevation (ft)	Shutoff Head (ft)	Shutoff Discharge (gpm)	Design Head (ft)	Design Discharge (gpm)	Maximum Operating Head (ft)	Maximum Operating Discharge (gpm)	Control Status	Intake Pump Grade (ft)	Discharge Pump Grade (ft)	Discharge (gpm)	Pump Head (ft)
400Z P1	230.00	176.00	0.00	132.00	1,000.00	0.00	2,000.00	Off	329.63	458.64	0.00	0.00
400Z P2	230.00	146.67	0.00	110.00	400.00	0.00	800.00	On	329.61	458.77	276.42	129.16
PS3-1	20.00	212.90	0.00	199.00	800.00	156.40	1,314.80	On	119.97	332.72	159.55	212.75
PS3-2	20.00	215.00	0.00	199.00	800.00	156.40	1,314.80	On	119.97	332.72	377.38	212.75
PS4- 2	250.00	480.00	0.00	360.00	120.00	0.00	240.00	Off	327.84	363.07	0.00	0.00
PS4-1	250.00	105.00	0.00	95.00	110.00	90.00	135.00	Off	327.84	363.07	0.00	0.00

Scenario: WSP Year 2013
Steady State Analysis
Tank Report

B2

Label	Zone	Base Elevation (ft)	Minimum Elevation (ft)	Initial HGL (ft)	Maximum Elevation (ft)	Inactive Volume (gal)	Tank Diameter (ft)	Inflow (gpm)	Current Status	Calculated Hydraulic Grade (ft)	Calculated Percent Full (%)
330 RES	330	242.00	312.00	330.00	330.00	0.00	10.00	-621.08	Draining	330.00	100.0

Scenario: WSP Year 2013
Steady State Analysis
Valve Report

B2

Label	Elevation (ft)	Initial Pressure (psi)	Initial HGL (ft)	Diameter (in)	Control Status	Discharge (gpm)	From HGL (ft)	To HGL (ft)	Headloss (ft)
PRV-1	250.00	30.00	319.18	6.0	Closed	0.00	398.31	327.84	0.00
PRV-2	230.00	73.72	400.00	6.0	Throttling	276.42	458.54	400.06	58.48

Scenario: WSP Year 2027
Steady State Analysis
Junction Report

B3

2027 PHD

Label	Zone	Elevation (ft)	Type	Base Flow (gpm)	Calculated Hydraulic Grade (ft)	Pressure (psi)
J2060	1	250.00	Demand	5.52	327.23	33.48
J3110	1	250.00	Demand	1.38	327.23	33.48
J3043	330	240.00	Demand	2.28	327.21	37.81
J220	330	235.00	Demand	9.17	328.84	40.68
J2070	1	230.00	Demand	2.76	327.23	42.15
J240	99	230.00	Demand	2.76	328.37	42.64
J210	99	230.00	Demand	2.76	329.12	42.97
J190	330	230.00	Demand	2.76	329.51	43.14
J200	330	230.00	Demand	2.76	329.52	43.14
J-16	Zone-1	230.00	Demand	0.00	329.53	43.15
J4030	330	230.00	Demand	0.00	329.57	43.17
J10	330	20.00	Demand	0.00	119.97	43.34
J230	1	225.00	Demand	2.76	328.53	44.88
J175	1	220.00	Demand	1.14	329.49	47.47
J180	1	220.00	Demand	2.76	329.49	47.47
J2110	1	215.00	Demand	13.80	327.21	48.65
J360	99	205.00	Demand	13.80	327.24	52.99
J350	99	205.00	Demand	27.59	327.29	53.02
J340	2	200.00	Demand	27.59	327.41	55.24
J250	1	200.00	Demand	2.76	328.14	55.55
J170	2	195.00	Demand	27.59	329.48	58.30
J3010	1	260.00	Demand	6.90	396.81	59.31
J720	2	185.00	Demand	1.38	329.43	62.61
J2120	1	180.00	Demand	13.80	327.21	63.82
J2050	1	250.00	Demand	12.42	397.87	64.10
J3030	360	245.00	Demand	7.98	396.47	65.66
J330	2	175.00	Demand	27.59	328.08	66.36
J3054	1	240.00	Demand	2.28	396.19	67.71
J3045	360	240.00	Demand	20.12	396.24	67.73
J3040	360	240.00	Demand	1.54	396.27	67.75
J3050	1	240.00	Demand	6.90	396.32	67.77
J265	330	170.00	Demand	300.00	327.62	68.33
J260	1	170.00	Demand	0.00	327.95	68.47
J3055	1	235.00	Demand	0.00	396.19	69.88
J2040	1	235.00	Demand	13.80	398.03	70.67
J2170	1	230.00	Demand	5.52	396.18	72.04
J3060	1	230.00	Demand	6.90	396.18	72.04
J750	1	230.00	Demand	20.69	396.18	72.04
J2160	1	230.00	Demand	5.52	396.18	72.04
J3057	330	230.00	Demand	0.00	396.23	72.07
J3020	1	230.00	Demand	6.90	396.81	72.31
J2100	1	230.00	Demand	13.80	398.05	72.85
J730	1	230.00	Demand	1.38	399.31	73.40
J4060	360	230.00	Demand	0.00	399.31	73.40
J-17	Zone-1	230.00	Demand	0.00	399.94	73.67
J2230	1	225.00	Demand	1.38	396.19	74.21
J245	1	225.00	Demand	0.00	396.19	74.21
J225	360	225.00	Demand	0.00	396.19	74.22
J2090	1	225.00	Demand	6.90	398.14	75.06
J2080	1	225.00	Demand	11.04	398.14	75.06
J740	1	225.00	Demand	13.80	399.31	75.57
J2180	1	220.00	Demand	6.90	396.17	76.37

Scenario: WSP Year 2027
Steady State Analysis
Junction Report

B 3
2027 PHD

Label	Zone	Elevation (ft)	Type	Base Flow (gpm)	Calculated Hydraulic Grade (ft)	Pressure (psi)
BB-Semiahmoo	330	20.00	Demand	50.00	318.74	129.51
J-2	330	20.00	Demand	2.28	332.67	135.55
J-3	330	20.00	Demand	0.00	332.44	135.45
J-5	330	20.00	Demand	0.00	332.44	135.45
J-6	330	20.00	Demand	0.00	332.44	135.45
J-7	330	20.00	Demand	0.00	332.44	135.45
J-8	330	20.00	Demand	0.00	332.44	135.45
J-9	330	20.00	Demand	0.00	332.44	135.45
J-10	330	20.00	Demand	0.00	332.14	135.32
J-11	330	20.00	Demand	14.82	332.14	135.32
J-12	330	20.00	Demand	11.40	332.13	135.32
J-13	330	20.00	Demand	11.40	332.13	135.32
J-16	Zone-1	230.00	Demand	0.00	329.53	43.15
J-17	Zone-1	230.00	Demand	0.00	399.94	73.67
J-18	Zone-1	230.00	Demand	0.00	453.71	96.98
J10	330	20.00	Demand	0.00	119.97	43.34
J100	330	20.00	Demand	0.00	332.68	135.55
J110	2	20.00	Demand	27.59	332.55	135.50
J120	2	20.00	Demand	2.76	330.69	134.69
J130	2	85.00	Demand	2.76	330.23	106.31
J135	330	75.00	Demand	13.41	329.79	110.46
J138	330	75.00	Demand	13.41	329.79	110.45
J140	2	80.00	Demand	27.59	329.65	108.23
J150	2	120.00	Demand	2.76	329.54	90.84
J160	2	145.00	Demand	27.59	329.47	79.97
J170	2	195.00	Demand	27.59	329.48	58.30
J175	1	220.00	Demand	1.14	329.49	47.47
J180	1	220.00	Demand	2.76	329.49	47.47
J190	330	230.00	Demand	2.76	329.51	43.14
J200	330	230.00	Demand	2.76	329.52	43.14
J210	99	230.00	Demand	2.76	329.12	42.97
J220	330	235.00	Demand	9.17	328.84	40.68
J225	360	225.00	Demand	0.00	396.19	74.22
J230	1	225.00	Demand	2.76	328.53	44.88
J240	99	230.00	Demand	2.76	328.37	42.64
J245	1	225.00	Demand	0.00	396.19	74.21
J250	1	200.00	Demand	2.76	328.14	55.55
J260	1	170.00	Demand	0.00	327.95	68.47
J265	330	170.00	Demand	300.00	327.62	68.33
J270	2	80.00	Demand	2.76	329.60	108.21
J280	2	140.00	Demand	6.90	329.45	82.13
J290	2	120.00	Demand	20.69	329.37	90.76
J300	2	125.00	Demand	13.80	329.26	88.55
J310	2	150.00	Demand	13.80	329.43	77.79
J320	2	150.00	Demand	27.59	329.38	77.76
J330	2	175.00	Demand	27.59	328.08	66.36
J340	2	200.00	Demand	27.59	327.41	55.24
J350	99	205.00	Demand	27.59	327.29	53.02
J360	99	205.00	Demand	13.80	327.24	52.99
J370	2	140.00	Demand	27.59	327.26	81.18
J380	2	70.00	Demand	27.59	327.21	111.51
J390	2	125.00	Demand	1.38	327.21	87.66

Scenario: WSP Year 2027
Steady State Analysis
Junction Report

B 3

Label	Zone	Elevation (ft)	Type	Base Flow (gpm)	Calculated Hydraulic Grade (ft)	Pressure (psi)
J400	2	85.00	Demand	1.38	327.21	105.00
J650	2	125.00	Demand	34.49	329.46	88.64
J660	2	90.00	Demand	16.56	329.50	103.83
J670	2	85.00	Demand	20.69	329.53	106.01
J680	2	125.00	Demand	4.56	329.48	88.65
J685	Zone-1	125.00	Demand	3.42	329.47	88.64
J686	Zone-1	120.00	Demand	4.56	329.47	90.81
J690	2	130.00	Demand	4.56	329.44	86.46
J710	2	110.00	Demand	1.38	329.50	95.16
J720	2	185.00	Demand	1.38	329.43	62.61
J730	1	230.00	Demand	1.38	399.31	73.40
J740	1	225.00	Demand	13.80	399.31	75.57
J750	1	230.00	Demand	20.69	396.18	72.04
J2000	1	220.00	Demand	13.80	398.83	77.53
J2010	1	210.00	Demand	8.28	398.83	81.86
J2020	1	210.00	Demand	2.76	398.83	81.86
J2030	1	220.00	Demand	13.80	398.17	77.24
J2040	1	235.00	Demand	13.80	398.03	70.67
J2050	1	250.00	Demand	12.42	397.87	64.10
J2060	1	250.00	Demand	5.52	327.23	33.48
J2070	1	230.00	Demand	2.76	327.23	42.15
J2080	1	225.00	Demand	11.04	398.14	75.06
J2090	1	225.00	Demand	6.90	398.14	75.06
J2100	1	230.00	Demand	13.80	398.05	72.85
J2110	1	215.00	Demand	13.80	327.21	48.65
J2120	1	180.00	Demand	13.80	327.21	63.82
J2130	1	150.00	Demand	13.80	327.21	76.82
J2140	1	215.00	Demand	13.80	396.20	78.55
J2150	1	210.00	Demand	5.52	396.20	80.72
J2160	1	230.00	Demand	5.52	396.18	72.04
J2170	1	230.00	Demand	5.52	396.18	72.04
J2180	1	220.00	Demand	6.90	396.17	76.37
J2190	1	215.00	Demand	5.52	396.17	78.54
J2200	1	215.00	Demand	6.90	396.15	78.53
J2210	1	215.00	Demand	13.80	396.15	78.53
J2220	1	210.00	Demand	13.80	396.15	80.70
J2230	1	225.00	Demand	1.38	396.19	74.21
J2240	1	215.00	Demand	2.76	397.87	79.28
J2250	1	200.00	Demand	1.38	397.87	85.78
J3010	1	260.00	Demand	6.90	396.81	59.31
J3020	1	230.00	Demand	6.90	396.81	72.31
J3030	360	245.00	Demand	7.98	396.47	65.66
J3040	360	240.00	Demand	1.54	396.27	67.75
J3043	330	240.00	Demand	2.28	327.21	37.81
J3045	360	240.00	Demand	20.12	396.24	67.73
J3050	1	240.00	Demand	6.90	396.32	67.77
J3054	1	240.00	Demand	2.28	396.19	67.71
J3055	1	235.00	Demand	0.00	396.19	69.88
J3057	330	230.00	Demand	0.00	396.23	72.07
J3060	1	230.00	Demand	6.90	396.18	72.04
J3070	1	215.00	Demand	11.04	396.15	78.53
J3080	1	210.00	Demand	6.90	396.15	80.70

Scenario: WSP Year 2027
Steady State Analysis
Junction Report

B 3

Label	Zone	Elevation (ft)	Type	Base Flow (gpm)	Calculated Hydraulic Grade (ft)	Pressure (psi)
J3090	1	205.00	Demand	11.04	396.15	82.87
J3100	1	200.00	Demand	8.28	396.15	85.03
J3110	1	250.00	Demand	1.38	327.23	33.48
J4030	330	230.00	Demand	0.00	329.57	43.17
J4050	360	220.00	Demand	0.00	399.08	77.64
J4060	360	230.00	Demand	0.00	399.31	73.40

Scenario: WSP Year 2027
Steady State Analysis
Pump Report

B 3

Label	Elevation (ft)	Shutoff Head (ft)	Shutoff Discharge (gpm)	Design Head (ft)	Design Discharge (gpm)	Maximum Operating Head (ft)	Maximum Operating Discharge (gpm)	Control Status	Intake Pump Grade (ft)	Discharge Pump Grade (ft)	Discharge (gpm)	Pump Head (ft)
400Z P1	230.00	176.00	0.00	132.00	1,000.00	0.00	2,000.00	Off	329.53	453.71	0.00	0.00
400Z P2	230.00	146.67	0.00	110.00	400.00	0.00	800.00	On	329.51	453.87	312.00	124.36
PS3-1	20.00	212.90	0.00	199.00	800.00	156.40	1,314.80	On	119.96	332.68	174.81	212.71
PS3-2	20.00	215.00	0.00	199.00	800.00	156.40	1,314.80	On	119.96	332.68	380.13	212.71
PS4- 2	250.00	480.00	0.00	360.00	120.00	0.00	240.00	Off	327.23	362.55	0.00	0.00
PS4-1	250.00	105.00	0.00	95.00	110.00	90.00	135.00	Off	327.23	362.55	0.00	0.00

© Haestad Methods, Inc.
CHS Engineers Inc
37 Brookside Road Waterbury, CT 06708 USA +1-203-755-1666

Scenario: WSP Year 2027
Steady State Analysis
Tank Report

B 3

Label	Zone	Base Elevation (ft)	Minimum Elevation (ft)	Initial HGL (ft)	Maximum Elevation (ft)	Inactive Volume (gal)	Tank Diameter (ft)	Inflow (gpm)	Current Status	Calculated Hydraulic Grade (ft)	Calculated Percent Full (%)
330 RES	330	242.00	312.00	330.00	330.00	0.00	10.00	-707.06	Draining	330.00	100.0

© Haestad Methods, Inc.
CHS Engineers Inc
37 Brookside Road Waterbury, CT 06708 USA +1-203-755-1666

Scenario: WSP Year 2027
Steady State Analysis
Valve Report

B 3

Label	Elevation (ft)	Initial Pressure (psi)	Initial HGL (ft)	Diameter (in)	Control Status	Discharge (gpm)	From HGL (ft)	To HGL (ft)	Headloss (ft)
PRV-1	250.00	30.00	319.18	6.0	Closed	0.00	397.87	327.23	0.00
PRV-2	230.00	73.72	400.00	6.0	Throttling	312.00	453.59	400.06	53.52

© Haestad Methods, Inc.
CHS Engineers Inc
37 Brookside Road Waterbury, CT 06708 USA +1-203-755-1666

Scenario: WSP Year 2013
Fire Flow Analysis
Fire Flow Report

2013 MDD Fire
B4

Label	Elevation (ft)	Satisfies Fire Flow Constraints?	Base Flow (gpm)	Needed Fire Flow (gpm)	Available Fire Flow (gpm)	Residual Pressure (psi)	Calculated Residual Pressure (psi)	Minimum System Pressure (psi)	Calculated Minimum System Pressure (psi)	Minimum System Junction
BB-Semiahmoc	20.00	false	50.00	1,000.00	232.90	20.00	20.00	20.00	34.56	J3110
J-2	20.00	true	0.74	1,000.00	1,500.00	20.00	125.44	20.00	33.37	J3110
J-3	20.00	true	0.00	1,000.00	1,500.00	20.00	132.41	20.00	33.23	J3110
J-5	20.00	true	0.00	1,000.00	1,500.00	20.00	131.78	20.00	33.23	J3110
J-6	20.00	true	0.00	1,000.00	1,500.00	20.00	131.62	20.00	33.23	J3110
J-7	20.00	true	0.00	1,000.00	1,500.00	20.00	129.71	20.00	33.23	J3110
J-8	20.00	true	0.00	1,000.00	1,500.00	20.00	123.87	20.00	33.23	J3110
J-9	20.00	true	0.00	1,000.00	1,500.00	20.00	129.50	20.00	33.23	J3110
J-10	20.00	true	0.00	1,000.00	1,500.00	20.00	132.11	20.00	33.04	J3110
J-11	20.00	true	4.79	1,000.00	1,500.00	20.00	128.55	20.00	33.04	J3110
J-12	20.00	true	3.69	1,000.00	1,500.00	20.00	124.19	20.00	33.04	J3110
J-13	20.00	true	3.69	1,000.00	1,500.00	20.00	123.45	20.00	33.04	J3110
J-16	230.00	true	0.00	1,000.00	1,500.00	20.00	42.37	20.00	34.33	J3110
J-17	230.00	false	0.00	1,000.00	752.30	20.00	33.17	20.00	20.00	J3010
J-18	230.00	false	0.00	1,000.00	756.13	20.00	33.19	20.00	20.00	J3010
J10	20.00	true	0.00	1,000.00	1,500.00	20.00	43.21	20.00	35.16	J3110
J100	20.00	true	0.00	1,000.00	1,500.00	20.00	132.64	20.00	33.37	J3110
J110	20.00	true	8.92	1,000.00	1,500.00	20.00	132.52	20.00	33.30	J3110
J120	20.00	true	0.89	1,000.00	1,500.00	20.00	130.99	20.00	32.05	J3110
J130	85.00	true	0.89	1,000.00	1,500.00	20.00	102.62	20.00	31.75	J3110
J135	75.00	true	4.34	1,000.00	1,500.00	20.00	106.83	20.00	31.45	J3110
J138	75.00	true	4.34	1,000.00	1,500.00	20.00	98.27	20.00	31.45	J3110
J140	80.00	true	8.92	1,000.00	1,500.00	20.00	104.63	20.00	31.34	J3110
J150	120.00	true	0.89	1,000.00	1,500.00	20.00	87.34	20.00	31.10	J3110
J160	145.00	true	8.92	1,000.00	1,500.00	20.00	76.59	20.00	30.96	J3110
J170	195.00	true	8.92	1,000.00	1,500.00	20.00	55.42	20.00	31.87	J3110
J175	220.00	true	0.37	1,000.00	1,500.00	20.00	45.22	20.00	32.67	J3110
J180	220.00	true	0.89	1,000.00	1,500.00	20.00	45.31	20.00	32.76	J3110
J190	230.00	true	0.89	1,000.00	1,500.00	20.00	41.96	20.00	33.70	J3110
J200	230.00	true	0.89	1,000.00	1,500.00	20.00	42.58	20.00	34.21	J3110
J210	230.00	true	0.89	1,000.00	1,500.00	20.00	39.53	20.00	34.21	J3110
J220	235.00	true	2.97	1,000.00	1,500.00	20.00	35.16	20.00	34.21	J3110
J225	225.00	false	0.00	1,000.00	684.19	20.00	29.80	20.00	20.00	J3010
J230	225.00	true	0.89	1,000.00	1,500.00	20.00	36.97	20.00	34.21	J3110
J240	230.00	true	0.89	1,000.00	1,500.00	20.00	33.48	20.00	34.21	J3110
J245	225.00	false	0.00	1,000.00	684.19	20.00	29.76	20.00	20.00	J3010
J250	200.00	true	0.89	1,000.00	1,500.00	20.00	44.59	20.00	33.48	J240
J260	170.00	true	0.00	1,000.00	1,500.00	20.00	55.97	20.00	33.48	J240
J265	170.00	true	0.00	1,000.00	1,500.00	20.00	53.17	20.00	33.48	J240
J270	80.00	true	0.89	1,000.00	1,500.00	20.00	103.34	20.00	31.34	J3110
J280	140.00	true	2.23	1,000.00	1,500.00	20.00	71.19	20.00	31.33	J3110
J290	120.00	true	6.69	1,000.00	1,500.00	20.00	71.75	20.00	31.33	J3110
J300	125.00	true	4.46	1,000.00	1,500.00	20.00	52.49	20.00	31.32	J3110
J310	150.00	true	4.46	1,000.00	1,500.00	20.00	73.82	20.00	30.38	J3110
J320	150.00	true	8.92	1,000.00	1,500.00	20.00	73.36	20.00	30.00	J3110
J330	175.00	true	8.92	1,000.00	1,500.00	20.00	57.24	20.00	25.41	J3010
J340	200.00	true	8.92	1,000.00	1,442.11	20.00	43.70	20.00	20.00	J3010
J350	205.00	true	8.92	1,000.00	1,369.29	20.00	41.41	20.00	20.00	J3010
J360	205.00	true	4.46	1,000.00	1,307.75	20.00	43.43	20.00	20.00	J3010
J370	140.00	true	8.92	1,000.00	1,376.72	20.00	63.90	20.00	20.00	J3010

Scenario: WSP Year 2013
Fire Flow Analysis
Fire Flow Report

B4

Label	Elevation (ft)	Satisfies Fire Flow Constraints?	Base Flow (gpm)	Needed Fire Flow (gpm)	Available Fire Flow (gpm)	Residual Pressure (psi)	Calculated Residual Pressure (psi)	Minimum System Pressure (psi)	Calculated Minimum System Pressure (psi)	Minimum System Junction
J380	70.00	true	8.92	1,000.00	1,365.02	20.00	94.16	20.00	20.00	J3010
J390	125.00	true	0.45	1,000.00	1,362.14	20.00	70.75	20.00	20.00	J3010
J400	85.00	true	0.45	1,000.00	1,349.67	20.00	89.97	20.00	20.00	J3010
J650	125.00	true	11.15	1,000.00	1,500.00	20.00	77.81	20.00	31.33	J3110
J660	90.00	true	5.35	1,000.00	1,500.00	20.00	92.70	20.00	31.33	J3110
J670	85.00	true	6.69	1,000.00	1,500.00	20.00	98.10	20.00	31.34	J3110
J680	125.00	true	1.47	1,000.00	1,500.00	20.00	82.78	20.00	30.69	J3110
J685	125.00	true	1.11	1,000.00	1,500.00	20.00	79.40	20.00	30.60	J3110
J686	120.00	true	1.47	1,000.00	1,500.00	20.00	81.55	20.00	30.60	J3110
J690	130.00	true	1.47	1,000.00	1,500.00	20.00	79.97	20.00	30.38	J3110
J710	110.00	true	0.45	1,000.00	1,500.00	20.00	75.16	20.00	31.33	J3110
J720	185.00	true	0.45	1,000.00	1,500.00	20.00	46.39	20.00	30.38	J3110
J730	230.00	false	0.45	1,000.00	742.48	20.00	32.73	20.00	20.00	J3010
J740	225.00	false	4.46	1,000.00	742.48	20.00	30.34	20.00	20.00	J3010
J750	230.00	false	6.69	1,000.00	684.19	20.00	24.19	20.00	20.00	J3010
J2000	220.00	false	4.46	1,000.00	734.57	20.00	37.45	20.00	20.00	J3010
J2010	210.00	false	2.68	1,000.00	734.57	20.00	40.16	20.00	20.00	J3010
J2020	210.00	false	0.89	1,000.00	734.57	20.00	36.84	20.00	20.00	J3010
J2030	220.00	false	4.46	1,000.00	722.25	20.00	37.41	20.00	20.00	J3010
J2040	235.00	false	4.46	1,000.00	719.10	20.00	30.90	20.00	20.00	J3010
J2050	250.00	false	4.01	1,000.00	714.86	20.00	24.39	20.00	20.00	J3010
J2060	250.00	true	1.78	1,000.00	1,291.99	20.00	24.29	20.00	20.00	J3010
J2070	230.00	true	0.89	1,000.00	1,303.09	20.00	32.76	20.00	20.00	J3010
J2080	225.00	false	3.57	1,000.00	721.95	20.00	33.87	20.00	20.00	J3010
J2090	225.00	false	2.23	1,000.00	721.95	20.00	31.95	20.00	20.00	J3010
J2100	230.00	false	4.46	1,000.00	720.87	20.00	28.93	20.00	20.00	J3010
J2110	215.00	true	4.46	1,000.00	1,333.34	20.00	35.90	20.00	20.00	J3010
J2120	180.00	true	4.46	1,000.00	1,340.15	20.00	50.15	20.00	20.00	J3010
J2130	150.00	true	4.46	1,000.00	1,344.45	20.00	62.55	20.00	20.00	J3010
J2140	215.00	false	4.46	1,000.00	684.19	20.00	35.15	20.00	20.00	J3010
J2150	210.00	false	1.78	1,000.00	684.19	20.00	29.64	20.00	20.00	J3010
J2160	230.00	false	1.78	1,000.00	684.19	20.00	28.56	20.00	20.00	J3010
J2170	230.00	false	1.78	1,000.00	684.19	20.00	28.47	20.00	20.00	J3010
J2180	220.00	false	2.23	1,000.00	684.19	20.00	32.60	20.00	20.00	J3010
J2190	215.00	false	1.78	1,000.00	684.19	20.00	27.89	20.00	20.00	J3010
J2200	215.00	false	2.23	1,000.00	684.19	20.00	33.79	20.00	20.00	J3010
J2210	215.00	false	4.46	1,000.00	684.19	20.00	32.84	20.00	20.00	J3010
J2220	210.00	false	4.46	1,000.00	684.19	20.00	35.76	20.00	20.00	J3010
J2230	225.00	false	0.45	1,000.00	684.19	20.00	30.12	20.00	20.00	J3010
J2240	215.00	false	0.89	1,000.00	714.86	20.00	23.97	20.00	20.00	J3010
J2250	200.00	false	0.45	1,000.00	714.86	20.00	23.90	20.00	20.00	J3010
J3010	260.00	false	2.23	1,000.00	684.19	20.00	20.00	20.00	26.48	J3030
J3020	230.00	false	2.23	1,000.00	684.19	20.00	29.46	20.00	20.00	J3010
J3030	245.00	false	2.58	1,000.00	684.19	20.00	24.49	20.00	20.00	J3010
J3040	240.00	false	0.50	1,000.00	684.19	20.00	24.72	20.00	20.00	J3010
J3043	240.00	true	0.74	1,000.00	1,333.34	20.00	22.91	20.00	20.00	J3010
J3045	240.00	false	6.50	1,000.00	684.19	20.00	24.54	20.00	20.00	J3010
J3050	240.00	false	2.23	1,000.00	684.19	20.00	25.16	20.00	20.00	J3010
J3054	240.00	false	0.74	1,000.00	684.19	20.00	22.28	20.00	20.00	J3010
J3055	235.00	false	0.00	1,000.00	684.19	20.00	25.47	20.00	20.00	J3010

Scenario: WSP Year 2013
Fire Flow Analysis
Fire Flow Report

B4

Label	Elevation (ft)	Satisfies Fire Flow Constraints?	Base Flow (gpm)	Needed Fire Flow (gpm)	Available Fire Flow (gpm)	Residual Pressure (psi)	Calculated Residual Pressure (psi)	Minimum System Pressure (psi)	Calculated Minimum System Pressure (psi)	Minimum System Junction
J3057	230.00	false	0.00	1,000.00	684.19	20.00	28.92	20.00	20.00	J3010
J3060	230.00	false	2.23	1,000.00	684.19	20.00	27.57	20.00	20.00	J3010
J3070	215.00	false	3.57	1,000.00	684.19	20.00	33.64	20.00	20.00	J3010
J3080	210.00	false	2.23	1,000.00	684.19	20.00	35.41	20.00	20.00	J3010
J3090	205.00	false	3.57	1,000.00	684.19	20.00	37.88	20.00	20.00	J3010
J3100	200.00	false	2.68	1,000.00	684.19	20.00	39.96	20.00	20.00	J3010
J3110	250.00	true	0.45	1,000.00	1,291.99	20.00	24.24	20.00	20.00	J3010
J4030	230.00	true	0.00	1,000.00	1,500.00	20.00	42.75	20.00	34.33	J3110
J4050	220.00	false	0.00	1,000.00	738.65	20.00	37.46	20.00	20.00	J3010
J4060	230.00	false	0.00	1,000.00	742.48	20.00	33.14	20.00	20.00	J3010

© Haestad Methods, Inc.
CHS Engineers Inc
37 Brookside Road Waterbury, CT 06708 USA +1-203-755-1666

CITY OF BLAINE
WATER SUPPLY EMERGENCY RESPONSE ACTION PLAN

The City of Blaine Emergency Water Supply Plan is a multistaged plan designed to be implemented as progressively more serious conditions develop with respect to meeting system demands including domestic supply, equalizing storage, fire storage and irrigation requirements.

Included within each stage are:

- **Water Supply Emergency Response Action Plan (WSERAP).** Includes information on actions which can be taken and are controllable by the City of Blaine.
- **Description of water supply conditions and expected savings at that stage.**
- **Customer Conservation Actions.** Includes conservation actions that will be requested or required of Water Utility customers in order to meet needed reductions in consumption.
- **Public Information Element.** A summary of the various means used to inform the public of the current water supply situation at each stage and what actions they will be requested to take.
- **Enforcement Actions.** Includes information about what enforcement actions the Department will taken in stages requiring mandatory water use restrictions.

A. Summer Shortage Response Plan

Since this type of shortage is realized during the summer months, the focus of the shortage response would be to reduce outdoor water uses.

Following is a description of the five stages of conservation actions included in the Plan.

1. Stage I - Minor Shortage Potential

Stage I of the WSERAP is implemented when the system storage remains below 70% of the total storage capacity over a 24-hour period.

Savings at this stage would be generated by water system management actions. All conservation actions combined would produce about 0.10 MGD of savings.

a. Water Supply Emergency Response Action Plan. The City of Blaine Water Utility would eliminate all non-essential operating system water uses to include pipeline flushing, reservoir overflow, and other uses.

b. Customer Conservation. In Stage I, no specific conservation actions are requested of customers.

c. Public Information Element. At Stage I of the WSERAP, the impact on the public due to supply problems would be limited. Because the impact of these actions is not really discernable, and since they may need to be in effect for a relatively short period of time, there would be no need to prematurely draw attention to a situation that may never require public actions. The existing conservation program should be used primarily to stimulate public awareness of conservation without a specific message of a potential water shortage.

2. Stage II - Moderate Shortage Potential

Stage II is implemented when:

- Total system storage remains below 50% of the total storage capacity over a 24-hour period.
- Weather forecasts predict a continuing trend of warmer, drier than normal conditions.

a. Water Supply Emergency Response Action Plan.

b. Customer Conservation Actions. In addition to system management conservation actions, the City of Blaine Water Utility would ask for voluntary reductions in outdoor water use by all customers. This would be a public appeal to voluntarily limit law sprinkling, car washing and other outdoor uses. At this point, all customer actions are voluntary. No surcharges or other economic incentives would be used.

c. Public Information Element. The success of implementing the WSERAP at Stage II largely depends on the cooperation of the general public in voluntarily reducing their outdoor water consumption. Public information efforts would need to be increasingly active in order to generate the necessary cooperation. The public would need to be motivated to save, and it would be important to acquaint the public with the nature of the water supply problem. In directly addressing the potential emergency situation, however, the public information effort shall be tempered in the event that weather conditions change, and the status of the water supply improves.

In addition to informing the public of the developing emergency situation, public information efforts at Stage II should attempt to create public attitudes that are receptive to conservation measures and inform water users of the most effective ways to reduce outdoor water use. To accomplish these objectives, public information efforts would utilize the mass media and specially developed materials, as well as the existing conservation program to promote conservation.

3. Stage III - Serious Shortage

Stage III is implemented when:

- Total system storage remains below 35% of the total storage capacity over a 24-hour period.
- System inflows continue to be low.
- Weather forecasts predict a continuing trend of warmer and drier than normal conditions.

a. Water Supply Emergency Response Action Plan.

b. Customer Conservation Actions. Because of the need for substantial reductions in water demand, the City of Blaine Water Utility would require outdoor water use restrictions for all customers. Non-commercial irrigation would be limited, and customers would also be asked to eliminate all other outdoor uses of water.

c. Public Information Element. By the time it would be necessary to move to Stage III of the Water Supply Emergency Response Action Plan, the general public should have a basic understanding of the nature of the emergency, and would have been informed of ways to reduce their outdoor water consumption.

With the imposition of outdoor water use restrictions, it would be necessary to adequately inform the public of those restrictions and any related enforcement efforts in order to gain maximum compliance.

To improve compliance with the imposed restrictions, public information requires repetition of the conservation message using multiple communication mediums. As public information intensifies, all projects of the existing conservation program would focus primarily on the shortage and direct more time to special public information efforts for the Water Supply Emergency Response Action Plan.

d. Enforcement Actions. The present billing system makes penalties such as surcharges or other economic incentives prohibitively difficult to implement. As part of its ongoing work on the WSERAP, staff would investigate enforcement methods used elsewhere and develop an approach for use here. Realistically, however, enforcement of the water use restrictions would very likely employ peer group pressure and observations by the City of Blaine Water Utility field employees during their regular work schedule.

A new billing system is expected to be developed during the next few years and the issue of surcharges is expected to be addressed. If the capability for penalty

assessment/surcharge is developed for utilization of water over a given amount, it will be included in the next revision of the WSERAP.

4. Stage IV - Severe Shortage

Stage IV is implemented when conditions as described in Stage III occur in conjunction with equipment failure affecting the City's inability to supply water to traditional levels or if total system storage drops below 20% of the total storage capacity over a 24-hour period. At this time, the amount of savings available from lawn watering reductions begin to decline sharply, making it necessary to generate savings in other ways.

a. Water System Management Actions. Water system management actions are the same as in Stage III.

b. Customer Conservation Actions. In addition to continuing the outdoor water use reductions from Stage III, residential customers would be asked to voluntarily cut back on indoor water uses. Commercial/industrial customers would also be asked to reduce water consumption.

Since a drought condition and implementation of a Stage IV response is an abnormal situation, the estimate of how much water can be saved by reducing lawn watering is very difficult to project.

c. Public Information Element. With a new request for residential customers to reduce water consumption indoors as well as outdoors, a new thrust must be introduced in public information efforts at Stage IV. Information on ways to conserve water indoors must be presented. Focusing on the community effort to reduce water consumption lends positive reinforcement for everyone to cooperate with the requested reductions. This requires more community involvement, as well as activities and materials specifically directed at promoting community spirit.

d. Enforcement Actions. Enforcement measures would be developed as part of the ongoing development work on the WSERAP (see comments under Stage III enforcement).

5. Stage V - Critical Emergency

Stage V is implemented when customer demands and system pressure requirements cannot be met and major reductions in water use are required. It is extremely unlikely that a shortage would ever become this severe. Nonetheless, it is necessary to plan for such an event.

a. Water System Management Actions. Water system management actions would be the same as in Stage III. In addition, system pressure may be reduced due to a lower availability of water in regulating basins and storage reservoirs. Local fire departments would be advised of any changes in system pressure which could impact fire flows.

b. Customer Conservation Actions. Stage V would require water rationing. When rationing is put into effect, user categories would be established and maximum water allocations would be set for each category. Customers would be required to reduce water use to the minimum amount possible. The goal for water rationing would be a 40% reduction in overall water use.

c. Public Information Element. If the shortage condition warrants implementation of Stage V of the WSERAP, people would have to be totally and constantly aware of conserving water. Public information would play a key role at this point in maintaining people's incentive to reduce water consumption. The seriousness of the situation should be reflected in all public information efforts.

   Once rationing is in place, public information would be used to inform customers of enforcement measures and effective means of reducing water consumption while still maintaining personal health and safety.

d. Enforcement Actions. Enforcement measures would be developed as part of the ongoing work on the WSERAP (see comments under Stage III enforcement).

CITY OF BLAINE PUBLIC WORKS DEPARTMENT
WATER CURTAILMENT PLAN

ACTION STAGE	I	II	III	IV
	Total Storage Less Than:			
STORAGE:	70%	50%	35%	20%
EQUIPMENT:	MINOR LOSS OF CAPACITY	LOSS OF 25% OF WELL CAPACITY	LOSS OF 50% OF WELL CAPACITY	MAJOR CATASTROPHE
DEMAND REDUCTION ACTIONS:	Voluntary conservation. Initiate public awareness through media efforts. Suggest watering of lawns every 3rd day. Car wash from buckets with shutoff.	Eliminate non-essential outdoor use. *Mandatory:* Water lawns every 3rd day. Advise wholesale customers to impose restrictions.	Eliminate outdoor use. No lawn watering. No car washing. Gardens only when necessary. Advise wholesale customers to impose restrictions.	Curtail commercial/industrial use except for essential services. Advise wholesale customers to impose restrictions.
CITY OF BLAINE ACTIONS:	General media notice re conservation. Bi-weekly watering letter.	Reduce system use. Main flushing, reservoir cleaning, temporary hydrant use curtailed.	Continue with reduced system use.	Intermittent supply to parts of City. Reduced system pressure. Use of water trucks.

F:\WP51\WATER\SWSERAP.STG

DRAFT

CITY OF BLAINE PUBLIC WORKS DEPARTMENT
WATER CURTAILMENT PLAN

ACTION STAGE	I	II	III	IV
	Total Storage Less Than:			
STORAGE:	70%	50%	35%	20%
EQUIPMENT:	MINOR LOSS OF CAPACITY	LOSS OF 25% OF WELL CAPACITY	LOSS OF 50% OF WELL CAPACITY	MAJOR CATASTROPHE
DEMAND REDUCTION ACTIONS:	Voluntary conservation. Initiate public awareness through media efforts. Suggest watering of lawns every 3rd day. Car wash from buckets with shutoff.	Eliminate non-essential outdoor use. *Mandatory:* Water lawns every 3rd day. Advise wholesale customers to impose restrictions.	Eliminate outdoor use. No lawn watering. No car washing. Gardens only when necessary. Advise wholesale customers to impose restrictions.	Curtail commercial/industrial use except for essential services. Advise wholesale customers to impose restrictions.
CITY OF BLAINE ACTIONS:	General media notice re conservation. Bi-weekly watering letter.	Reduce system use. Main flushing, reservoir cleaning, temporary hydrant use curtailed.	Continue with reduced system use.	Intermittent supply to parts of City. Reduced system pressure. Use of water trucks.

F:\WP51\WATER\SWSERAP.STO

2 may still exist

City of Blaine

Water System

Emergency Response Plan (ERP)

Last Revision: December 27, 2004

Reference: (a) Section 1433(b) of the Safe Drinking Water act as amended by the Public Health Security and Bioterrorism Preparedness and Response Act of 2002 (Public Law 107-188, Title IV – Drinking Water Security and Safety)
(b) Washington State Department of Health/Environmental Health Programs/Division of Drinking Water Publication No 331-183, "Responding to a Threat Against a Water System"
(c) Washington State Department of Health/Environmental Health Programs/Division of Drinking Water Publication No 331-199, "Water System Security and Emergency Response Planning"

Distribution:

- Entire Plan:
  - PWD Director
  - PWD Assistant Director
  - PWD Operations Supervisor
  - PWD Water Division Technician 1
  - PWD Water Division Technician 2
  - Birch Bay Water and Sewer District
  - Bell Bay Jackson Water Association

- Cover Page, TOC, Part 1, and Forms 1, 2, 3, & 4 only:
  - City Manager
  - All other Public Works Department Personnel
  - Finance Department Personnel
  - City Clerk Personnel
  - Community Development Department Personnel
  - Public Safety Department Personnel

TABLE OF CONTENTS

Part 1 – City Employee Action Table 3

Part 2 – Public Works Department Employee Action Table 4

Part 3 – Forms

Form No 1 9

Form No 2 10

Form No 3 11

Form No 4 12

PART 1
CITY EMPLOYEE ACTIONS

OBSERVES:

No	Situation	Response	Equipment/Tools
1.	City of Blaine drinking water quality parameter disparity (i.e., smell, taste, or color)	1. Complete Form No 1 attached.	N/A
2.	City of Blaine water system device, component, or facility tampering	1. Complete Form No 2 attached.	N/A
3.	Suspicious activity at/near City of Blaine water system device, component, or facility	1. Complete Form No 2 attached.	N/A

RECEIVES CITIZEN REPORT OF:

No	Situation	Response	Equipment/Tools
4.	City of Blaine drinking water quality parameter disparity (i.e., smell, taste, or color)	1. Complete Form No 3 attached.	N/A
5.	City of Blaine water system device, component, or facility tampering	1. Complete Form No 4 attached.	N/A
6.	Suspicious activity at/near City of Blaine water system device, component, or facility	1. Complete Form No 4 attached.	N/A

PART 2
PUBLIC WORKS DEPARTMENT EMPLOYEE ACTIONS

OPERATIONS SUPERVISOR (OR WATER DIVISION TECHNICIAN) RECEIVES REPORT OF:

No	Situation	Response	Equipment/Tools
7.	City of Blaine drinking water quality parameter disparity (i.e., smell, taste, or color)	1. Do you suspect terrorism, sabotage, or vandalism? 1.1. If **NO**: 1.1.1. Investigate report. 1.1.2. Determine cause. 1.1.3. Arrange resolution. 1.2. If **YES**: 1.2.1. Notify Blaine Police Department, 332.7255. 1.2.2. Notify Federal Bureau of Investigation, 1.206.622.0460. 1.2.3. Notify Washington State Department of Health Division of Drinking Water Regional Office, 1.253.395.6750 (after hours 1.877.481.4901), consult/identify actions to protect public health. 1.2.4. Notify Public Works Department Director, 815.6358. 1.2.5. Notify Birch Bay Water and Sewer District General Manager, 220.2063. 1.2.6. Bell Bay Jackson Water Association Board President, 332.5941. 1.2.7. Arrange collection of water samples/testing for coliform bacteria, chlorine residual, nitrates/nitrites. 1.2.8. Arrange collection/proper storage of water samples for future analysis, e.g.: • Fecal coliform bacteria. • Hetertrophic plate count. • Chlorine demand. • Total Organic Carbon (TOC).	Telephone, fax, email, vehicles, emergency electric power generators, spare parts inventory, hand tools, sampling bottles.

No	Situation	Response	Equipment/Tools
		• Total Halogenated Organic Carbon (TOX). • Cyanide. 1.2.9. Inspect facilities...DO NOT DISTURB POTENTIAL EVIDENCE. 1.2.10. Conduct full assessment of situation. 1.2.11. If circumstances dictate, identify alternative sources of supply. 1.2.12. Notify Public Works Department Director, 815.6358. 1.2.13. Clean, repair, disinfect system. 1.2.14. Notify Public Works Department Director, 815.6358	
8.	City of Blaine water system tampering	1. Notify Blaine Police Department, 332.7255. 2. Inspect facilities with Blaine Police Department representative...DO NOT DISTURB POTENTIAL EVIDENCE. 3. Are all water quality parameters (smell, taste, color) in vicinity/downstream of tampering within normal range? 3.1. If **YES**: 3.1.1. Go to Step 8.4 below. 3.2. If **NO**: 3.2.1. Go to Step 7.1 above. 4. Do you suspect terrorism or sabotage? 4.1. If **NO**: 4.1.1. Go to Step 8.5 below. 4.2. If **YES**: 4.2.1. Notify Federal Bureau of Investigation, 1.206.622.0460. 4.2.2. Notify Washington State Department of Health Division of Drinking Water Regional Office, 1.253.395.6750 (after hours 1.877.481.4901), consult/identify actions to protect public health. 4.2.3. Notify Public Works Department Director, 815.6358. 4.2.4 Notify Birch Bay Water and Sewer District General Manager, 220.2063. 4.2.5. Bell Bay Jackson Water Association Board President, 332.5941.	Same as above.

No	Situation	Response	Equipment/Tools
		5. Do you suspect vandalism? 5.1. If **NO**: 5.1.1. Restore system to normal operating conditions. 5.2. If **YES**: 5.2.1. Notify Public Works Department Director, 815.6358. 5.2.2. Go to Step 8.5.1.1.	
9.	Suspicious activity at/near City of Blaine water system facility	1. Notify Blaine Police Department, 332.7255. 2. Inspect facilities with Blaine Police Department representative...DO NOT DISTURB POTENTIAL EVIDENCE. 3. Does evidence of tampering exist? 3.1. If **YES**: 3.1.1. Go to Step 8.3 above. 3.2. If **NO**: 3.2.1. Restore system to normal operating conditions. 3.2.2. Notify Public Works Department Director, 815.6358.	Same as above.

PUBLIC WORKS DIRECTOR RECEIVES REPORT OF:

No	Situation	Response	Equipment/Tools
10.	City of Blaine drinking water quality parameter disparity (i.e., smell, taste, or color)	1. If initial report: 1.1. If do **NOT** suspect terrorism or vandalism, wait for update from Operations Supervisor or Water Division Technician. 1.2. If **DO** suspect terrorism or vandalism: 1.2.1. Notify City Manager, 410.7362. 1.2.2. Notify media (i.e., *preliminary* report). 2. If 1st subsequent report (i.e., from Operations Supervisor or Water Division Technician): 2.1. If do **NOT** suspect terrorism or vandalism, receive briefing, stand down. 2.2. If **DO** suspect terrorism or vandalism: 2.2.1. Notify media (i.e., *update* report) -- keep messages current; anticipate questions/prepare answers ahead; avoid conjecture, speculation, blame; everything is on the record; be succinct. 3. If 2nd or more subsequent report (i.e., from Operations Supervisor or Water Division Technician), return to Step 10.2.2.1 above.	Telephone, fax, email
11.	City of Blaine water system tampering	1. If initial report: 1.1. If do **NOT** suspect terrorism or vandalism, wait for update from Operations Supervisor or Water Division Technician. 1.2. If **DO** suspect terrorism or vandalism: 1.2.1. Notify City Manager. 1.2.2. Notify media (preliminary report). 2. If 1st subsequent report (i.e., from Operations Supervisor or Water Division Technician): 2.1. If do **NOT** suspect terrorism or vandalism, receive briefing, stand down. 2.2. If **DO** suspect terrorism or vandalism: 2.2.1. Notify media (i.e., *update* report) -- keep messages current; anticipate questions/prepare answers ahead; avoid	Telephone, fax, email

No	Situation	Response	Equipment/Tools
		conjecture, speculation, blame; everything is on the record; be succinct. 3. If 2nd or more subsequent report (i.e., from Operations Supervisor or Water Division Technician), return to Step 10.2.2.1 above.	
12.	Suspicious activity at/near City of Blaine water system facility	1. If initial report: 1.1. If do **NOT** suspect terrorism or vandalism, wait for update from Operations Supervisor or Water Division Technician. 1.2. If **DO** suspect terrorism or vandalism: 1.2.1. Notify City Manager. 1.2.2. Notify media (preliminary report). 2. If 1st subsequent report (i.e., from Operations Supervisor or Water Division Technician): 2.1. If do **NOT** suspect terrorism or vandalism, receive briefing, stand down. 2.2. If **DO** suspect terrorism or vandalism: 2.2.1. Notify media (i.e., *update* report) -- keep messages current; anticipate questions/prepare answers ahead; avoid conjecture, speculation, blame; everything is on the record; be succinct. 3. If 2nd or more subsequent report (i.e., from Operations Supervisor or Water Division Technician), return to Step 10.2.2.1 above.	Telephone, fax, email

City of Blaine
Water System Emergency Response Plan
Water System Water Quality Parameter Disparity Report
Form No 1

Observer's Printed Name	

	Date	**Time**
When Observed/Detected		

Location of water quality parameter disparity	

Disparity Type	☐ **Color** – water looks like	
	☐ **Taste** – water tastes like	
	☐ **Odor** – water smells like	

Share the above information with the following people in the sequence noted:

	Date	**Time**
☐ Operations Supervisor, 815.0494, OR ☐ John Moler, 815.7466, OR ☐ Tom Herrick, 815.6360		
☐ Public Works Department Director, 815.6358		

Deliver this completed form to PWD Operations Supervisor.

City of Blaine
Water System Emergency Response Plan
Water System Tampering/Suspicious Activity Report
Form No 2

Observer's Printed Name	

	Date	**Time**
When Observed/Detected		

Location of tampering or suspicious activity	

Tampered device, component, or facility	

Description of person(s) observed	

Share the above information with the following people in the sequence noted:

	Date	**Time**
☐ Operations Supervisor, 815.0494, OR ☐ John Moler, 815.7466, OR ☐ Tom Herrick, 815.6360		
☐ Public Works Department Director, 815.6358		

Deliver this completed form to PWD Operations Supervisor.

City of Blaine
Water System Emergency Response Plan
Water System Water Quality Parameter Disparity Report
Form No 3

Report Receiver's Printed Name	

Reporter's	**Name**	
	Address	
	Phone No(s)	

	Date	**Time**
When Observed/Detected		
When Reported to City		

Location of water quality parameter disparity	

Disparity Type	☐ **Color** – water looks like	
	☐ **Taste** – water tastes like	
	☐ **Odor** – water smells like	

Share the above information with the following people in the sequence noted:

	Date	**Time**
☐ Operations Supervisor, 815.0494, OR ☐ John Moler, 815.7466, OR ☐ Tom Herrick, 815.6360		
☐ Public Works Department Director, 815.6358		

Deliver this completed form to PWD Operations Supervisor.

City of Blaine
Water System Emergency Response Plan
Water System Tampering/Suspicious Activity Report
Form No 4

Report Receiver's Printed Name	

Reporter's	**Name**	
	Address	
	Phone No(s)	

	Date	**Time**
When Observed/Detected		
When Reported to City		

Location of tampering or suspicious activity	

Tampered device, component, or facility	

Description of person(s) observed	

Share the above information with the following people in the sequence noted:

	Date	**Time**
☐ Operations Supervisor, 815.0494, OR ☐ John Moler, 815.7466, OR ☐ Tom Herrick, 815.6360		
☐ Public Works Department Director, 815.6358		

Deliver this completed form to PWD Operations Supervisor.

CITY OF BLAINE
COLIFORM MONITORING PLAN

Prepared for:
City of Blaine
Utility Division
1200 Yew Avenue
Blaine, Washington 98230

Updated by:
Blaine Public Works
April 2008

CITY OF BLAINE
COLIFORM MONITORING PLAN

SYSTEM INFORMATION

System Name: The City of Blaine Water System

System Identification Number: 07300U

County: **Whatcom**

Sources: Groundwater is currently the source of supply for the City of Blaine. The City has ten wells. They are summarized in Table 1

Table 1
City of Blaine Water Sources

DOH Source No.	City Well No.	location	EPA tag #
S-02	2	Watershed	AGK383
S-03	3	Watershed	ABY237
S-04	4	Watershed	AGK378
S-05	5	Watershed	AGK384
S-06	8	Lincoln Park	AGK376
S-07	7	12th street	ABB959
S-10	1r	Watershed	ABE837
S-11	3r	Watershed	ABY237
S-12	5.2	Watershed	
S-13	4.2	Watershed	AFT324

Well # 3 and well 5 are used as emergency sources only.

Reservoirs: The City of Blaine has five reservoirs, which are summarized in the table below.

Table 2 City of Blaine Reservoirs		
Reservoir No.	**Location**	**Gallons (Capacity)**
1	**Watershed**	**1,000,000**
2	**E Street**	**100,000**
3	**Semiahmoo Parkway**	**1,000,000**
4	**Lincoln Park**	**1,300,000**
5	**Harvey Road**	**1,250,000**

Treatment:

The City of Blaine uses chlorine at the watershed to treat sources 1 through 6, and 10 through 11, all of which will feed to a common point prior to Reservoir #1. A normally closed valve is to be added to the bypass at Reservoir #1 to force the water through the reservoir and increase the CT-value prior to the first customer.

The in-city wells # 7 and #8 are used as supplemental sources, which do not have permanent disinfection systems

The City also uses hypochlorite at the Semiahmoo Spit pump station to increase the chlorine residual in West Blaine.

Pressure Zones:

The Five pressure zones for the City of Blaine service area are listed below in Table 3.

Name of Pressure Zone	Portion of System Server
1 (171' zone)	**Downtown/southeast of city/ wholesale customers**
2 (320' zone)	**East of downtown in business district**
3 (330" zone)	**West Blaine**
4 (360' zone)	**West Blaine**
5 (440' zone)	**East Blaine**

Sampling Locations:

- SL01-Sampling station at the intersection of Giles and Haynie Road. (171 pressure zone)
- SL02- Sampling station on Bell Road. (171 pressure zone)
- SL03- Sampling station located in Salishan Park. (171 pressure zone)
- SL04- Samples can be taken from the sampling port located at the Semiahmoo booster station. (330 pressure zone)
- SL05- Samples can be taken from the sampling port located at the St. Andrews Green booster station. (360 pressure zone)
- SL06- Sampling station on Valley View Road. (171 pressure zone)
- SL07*- Sampling station located in the fenced area of the Harvey Road Water reservoir. (440 pressure zone)
- SL08*- Sampling station located inside fenced area of Lincoln Park water reservoir. *Blaine Police @ 332-6769 before entering (320 pressure zone)
- SL09- Sampling station located at the cemetery on H Street. (440 pressure zone)
- SL10-Sampling station located on Odell Rd. in the rear of Totally Chocolate (on corner). (320 pressure zone)

- Before entering SL07 and SL08 Contact Blaine Police @332-6769 for weekday entry and the Border patrol @ 332-8781 or 332-2112 on weekends

Sample site rotation schedule:

Month	sites	Month	sites
January	SL02, SL07, SL04, SL05, SL10, SL03, SL09	July	SL06, SL07, SL04, SL05, SL10, SL02, SL01
February	SL02, SL07, SL10, SL05, SL08, SL01, SL06	August	SL06, SL07, SL10, SL05, SL08, SL02, SL03
March	SL03, SL09, SL04, SL05, SL10, SL01, SL02	September	SL01, SL09, SL04, SL05, SL10, SL03, SL07
April	SL03, SL09, SL10, SL05, SL08, SL01, SL02	October	SL01, SL09, SL10, SL05, SL08, SL02, SL06
May	SL03, SL09, SL04, SL05, SL10, SL02, SL06	November	SL01, SL09, SL04, SL05, SL10, SL06, SL03
June	SL06, SL07, SL10, SL05, SL08, SL09, SL01	December	SL02, SL07, SL10, SL05, SL08, SL03, SL01

Routine Coli form Sampling schedule and procedures:

As per the State of Washington Department of Health requirements the City of Blaine takes seven routine samples from the above representative locations listed above each month. Repeat samples are required following a positive routine sample. Repeat samples will be taken within 24 hours from the time the lab notifies the City of a positive sample. A repeat sampling will include the original sampling location and a sample from within 5 active service connections upstream of the original site and a sample from within 5 active service connection downstream of the original site. Therefore a repeat sample will be a total of 3 samples within the sample site group.

Apparatus used for sampling:

- Sampling container obtained from testing lab
- Hach pocket colorimeter digital chlorine residual analyzer
- Propane torch
- Cooler with ice

Coli form Sampling Instructions:

1. Locate sampling point.
2. You will see a faucet type attachment; this is where the sample will be taken from.
3. Before drawing the sample you must first sterilize the opening of the faucet. You will do this by heating the opening of the faucet with the propane torch (about 20 seconds).

4. After sterilizing the opening, open the faucet and let the water run for two or three minutes to insure that you are sampling from the main line and not getting any stagnant water that may have been setting in the line.
5. At this point you can test the flow for chlorine residual. Follow the instruction on Hach colorimeter for free chlorine. Record chlorine residual on lab sheet.
6. You are now ready to draw a sample, first reduce the flow and carefully remove the cap from the sample container being careful not to touch the inside of the cap or container (this would contaminate the sample). **Do not rinse the container** it has chemicals in it that are used to dechlorinate the sample.
7. Fill the container to the line near the neck of the container, than carefully replace the cap on the container.
8. Fill out the form that is supplied with the container with information such as date, time the sample was taken, location, name of sampler and location, there may be other information you are asked to enter be as complete and accurate as possible. (Note that the form and the sample container have the same number make sure the right form is attached to the right container).
9. Place sample in cooler
10. After all samples have been collected they need to be either transported to the lab or arrange for the samples to be picked up by the lab. Samples cannot be held for more than six hours.
11. Log results into database that is located in the water quality database in the Access program @ WWTP2\DRINKING\WATER QUALITY..\WATER QUALITY DATA.mdb

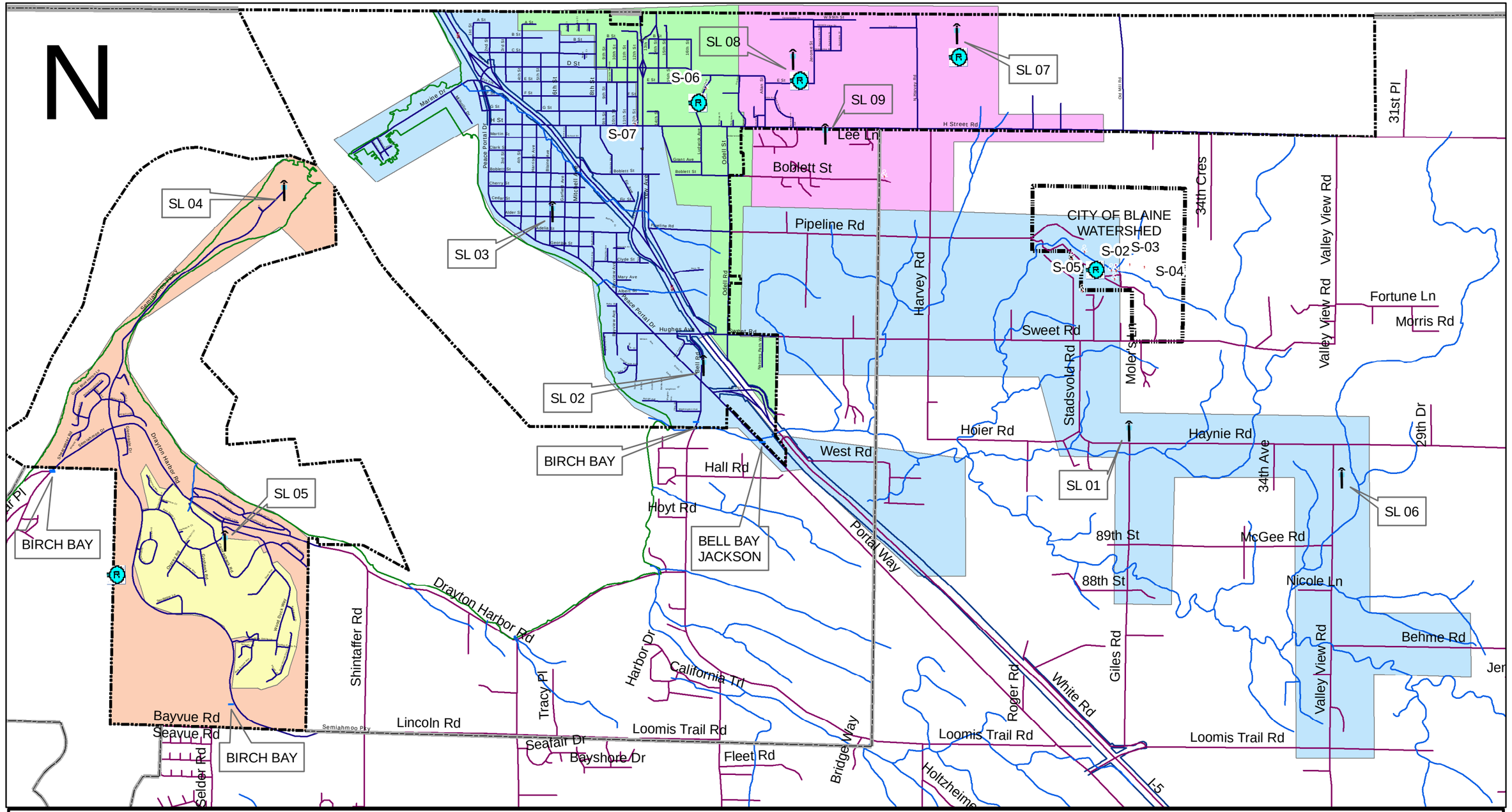

CITY OF BLAINE
COLIFORM MONITORING PLAN

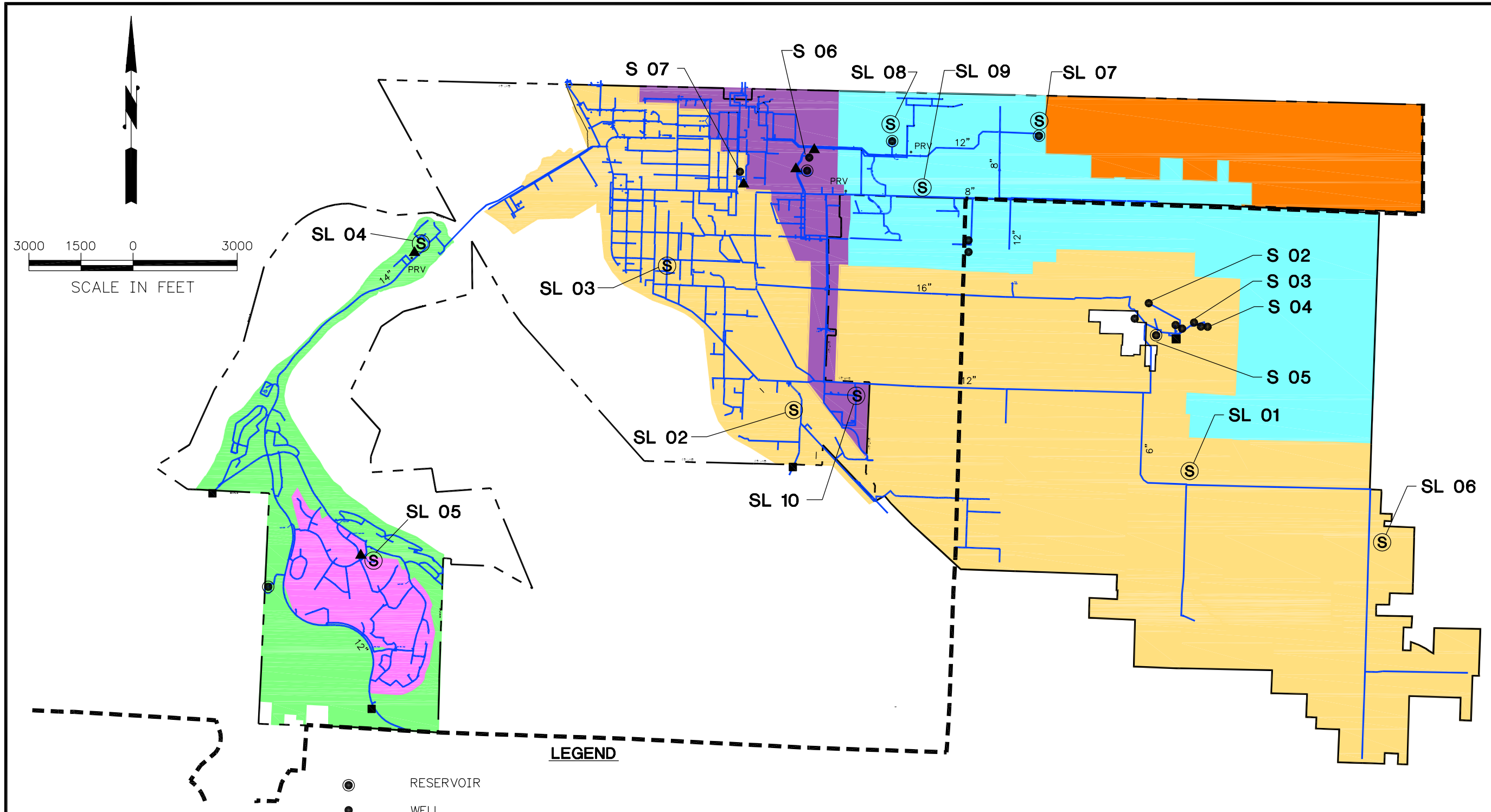

CHS
CHS ENGINEERS, LLC

CITY OF BLAINE
COMPREHENSIVE WATER SYSTEM PLAN

FIGURE 1

COLIFORM MONITORING

NOVEMBER 2009

270608\comp plan figs.DWG 11x17 1=3000 10/09/09

CHAPTER 3 – GENERAL PULIC WORKS CONSIDERATIONS

3.01.000 STANDARD SPECIFICATIONS

Design detail, workmanship, and materials shall be in accordance with the current edition of the "Standard Specifications for Road, Bridge and Municipal Construction", the "APWA Amendments to Division One", and the "Standard Plans for Road, Bridge and Municipal Construction", all written and promulgated by the Washington State Chapter of the American Public Works Association and the Washington State Department of Transportation, except where these standards provide otherwise. (BMC 12.20.010)

3.02.000 ADDITIONAL SPECIFICATIONS

The following specifications shall be applicable when pertinent, when specifically cited in the standards, or when required by a higher funding authority.

A. Conditions and standards as set forth in the Blaine Comprehensive Plan.

B. Conditions and standards as set forth in the City of Blaine Water System Comprehensive Plan most current edition.

C. Conditions and standards as set forth in the City of Blaine Sanitary Sewer Comprehensive Plan.

D. Conditions and standards as set forth in the City of Blaine Stormwater Management Plan.

E. Conditions and standards as set forth in the City of Blaine Transportation Element of the Comprehensive Plan.

F. Conditions and standards as set forth in the City of Blaine Electrical System Comprehensive Plan.

G. Conditions and standards as set forth in the City of Blaine Parks Comprehensive Plan

H. Rules and regulations as adopted in the Blaine Municipal Code.

I. BLANK

J. Criteria set forth in the Local Agency Guidelines as amended and approved by Washington State Department of Transportation.

K. BLANK

L. Conditions and standards as set forth in the City of Blaine "Down Town Development Plan".

M. Conditions and standards as set forth in the WSDOT Design Manual as amended and approved by WSDOT.

N. U.S. Department of Transportation Manual on Uniform Traffic Control Devices (MUTCD), as amended and approved by Washington State Department of Transportation.

O. DOT Construction Manual as amended and approved by Washington State Department of Transportation.

P. Rules and regulations of the State Board of Health regarding public water supplies, as published by the State Department of Health.

Q. Conditions and standards as set forth in the State of Washington Department of Ecology "Criteria for Sewage Works Design", most current edition.

R. Conditions and standards as set forth by the State of Washington, Department of Labor and Industries.

S. Design criteria of federal agencies including Department of Housing and Urban Development and the Federal Housing Administration.

T. Other specifications not listed above as may apply when required by the City of Blaine.

3.03.000 APPLICABILITY

These standards shall govern all new construction and upgrading of facilities both in the right-of-way and on-site for transportation and transportation related facilities; storm drainage facilities; sewer and water improvements; and park, recreation, and open-space facilities.

These City of Blaine Development Guidelines and Public Works Standards shall be cited routinely in the text as the "Standards"

3.04.000 DEFINITIONS AND TERMS

"Average Daily Traffic" or ADT—The average number of vehicles passing a specified point during a 24-hour period. Annual average daily traffic (AADT) denotes that daily traffic that is averaged over one calendar year.

"Building Sewer" or "Side Sewer"—Means the extension from the building drain to the public sewer or other place of disposal. (BMC 13.08.040)

"City Engineer"—The Public Works Director or his duly authorized representative.

"Developer"—Any person, firm, partnership, association, joint venture, or corporation or any other entity responsible for a given project.

"Director of Public Works"—The city manager as prescribed by ordinance, or his authorized deputy, agent or representative responsible for the sewage works and/or of water pollution control of the city (BMC 13.08.060).

"Easement"—The right to use a defined area of property for specific purpose/purposes as set forth in the easement document, on a plat or short plat, or as required for purposes as set forth herein.

"Engineer"—Any Washington State licensed professional engineer who represents the developer.

"ERU"—The unit used to calculate water and sewer impacts. Each single family residence shall equal one Equivalent Residential Unit. For purposes of these standards, the term ERU shall be as follows:

1. Single Family residence — 1 ERU/unit.
2. Duplex — 2 ERU/unit
3. For residential multi-family dwellings of three or more and all other uses not covered by 1 or 2 above, the size of the water meter shall determine the ERU count. A five-eighths inch by three-quarter inch meter size shall equal one ERU for purposes of computing nonresidential ERU counts. ERUs for all other meter sizes for nonresidential uses shall be determined based on industry standard ratings of flow factors as compared to a five-eighths inch by three-quarter inch meter as listed below

Meter Size	Flow Factor ERUs	Meter Size	Flow Factor ERUs
5/8" or ¾"	1.0	2"	8.0
1"	2.5	3"	16.0
1.5"	5.0	4"	25.0

(BMC 13.08.530 & BMC 13.14.000)

" Three Quarter Street" -- (BMC 17.06.400 Three Quarter standard street) Three Quarter standard street means the one half of the full standard street, defined in BMC 17.06.200, abutting on the developer's property plus a ten foot surfaced driving lane.

"Interceptor"—Shall be a sewer that receives flow from a number of main or trunk sewers, force mains, etc.

"Lateral"—Shall be that section of the sewer line extending from the City's main to the right-of-way or easement line (i.e., the building sewer) that has no other common sewers discharging into it. (BMC 13.08.040)

"BMC"—Blaine Municipal Code.

"Lot of Street Frontage"—The distance between the two points where the lot lines intersect the boundary of public street right-of-way.

"Plans"—The plans, profiles, cross sections, elevations, details, and supplementary specifications, signed by a licensed professional engineer and approved by the City Engineer, which show the location, character, dimensions, and details of the work to be performed.

"Private Sewer"—Shall be that portion of the system located on private property where no easements are granted to the City. Maintenance of a private sewer shall be the responsibility of the property owner(s).

"Private Street"—Private vehicular access provided for by an access tract, easement, or other legal means, that is privately owned and maintained.

"Project"—General term encompassing all phases of the work to be performed and is synonymous to the term "improvement' or "work".

"Public Sewer"—Means a sewer in which all owners of abutting properties have equal rights, and which is controlled by public authority. (BMC 13.08.130)

"Public Street" (BMC 17.06.380) Street means a dedicated and accepted public right-of-way for vehicular traffic. "Street" includes "road", "drive" or "boulevard".

"Right-of-Way" (BMC 17.06.350) Right-of-way or R/W means a strip of land dedicated to and maintained by the city for street and utility purposes and on a portion of which a street is built.

"Road"—Used interchangeably with street.

"Sewer Main" or 'Trunk"—Shall be a sewer that receives flow from one or more mains.

"Street"—Used interchangeably with road.

"Use of Pronoun"—As used herein, the singular shall include the plural, and the plural the singular; any masculine pronoun shall include the feminine or neuter gender and vice versa; and the term "person" includes natural person or persons, firm, co-partnership, corporation or association, or combination thereof.

"Utility"—A company providing public service including, but not limited to, gas, oil, electric power, street lighting, telephone, telegraph, water, sewer, cable television, or communication system, whether or not such company is privately owned or owned by a governmental entity.

3.05.000 CHANGES TO STANDARDS

From time to time, changes may be needed to add, delete, or modify the provisions of these Standards. These Standards may be changed and, upon approval of the Public Works Director, shall become effective and shall be incorporated into the existing provisions.

3.06.000 SEVERABILITY

If any part of these City of Blaine Development Guidelines as established by ordinance shall be found invalid, all other parts shall remain in effect.

3.07.000 DESIGN STANDARDS

A. Detailed plans, prepared by a licensed engineer, must be submitted to the City for plan review and approved prior to the commencement of any construction. Applicant's engineer shall be a Professional Engineer, registered as such in the State of Washington. All plans must be signed and stamped by the applicant's engineer prior to submittal for plan review. Final plans shall be approved by the Public Works Director prior to the start of construction.

B. Three bound copies of the plans are required to be submitted along with a completed Plan Review Application form and a "Request for Services" form. All drawings shall be on 24" x 36" sheet size. Original sheets shall be good quality reproducible ink on mylar. (Ink on velum is acceptable when CAD asbuilt drawings will be replotted on mylar). Original drawings of the approved plan shall become the property of the City of Blaine. A reproducible set of the drawings will be returned to the applicant's engineer.

C. Plans and profile drawings are required for all proposed transportation-related improvements; street illumination; traffic signalization; storm drainage facilities; sewer and water improvements and electrical system improvements. For specific minimum requirements, see the Plan Checklist on the following pages. On occasion, the scope of a project (i.e., relocating one hydrant) may not require engineered plans and can instead be handled via a Right-of-Way Use Permit. This option will be decided during Site Plan Review.

D. Specifications shall be required and submitted with the plans if General Notes do not adequately cover the project requirements.

E. Upon completion of the project and prior to acceptance of any public facilities a complete set of asbuilt plans of the facility shall be submitted for review and acceptance. All drawings shall be on 24" x 36" sheet size. One set of As-built originals shall be supplied as good quality reproducible ink on mylar. One set of As-built prints and one set of digital media shall be supplied in addition.

CHAPTER 3 – GENERAL PULIC WORKS CONSIDERATIONS

3.08.000 PLAN CHECKLIST

STANDARD ITEMS: WATER, SANITARY SEWER,

STORM SEWER, STREET, LIGHTING, AND SIGNALS

❑ Engineers Estimate in "Deed of Conveyance" formate

❑ Vicinity Map

❑ Legend (APWA Standard Symbols)

❑ North Arrow

❑ Scale Bar - 1" = 20' unless previously requested & approved.

❑ Datum - Bench Mark Elevation And Location (on all sheets

where elevations are referenced)

❑ Title Block:

❑ Title:

❑ Design By:

❑ Drawn By:

❑ Date:

❑ Checked By:

❑ City Signature Approval Block (2½"x4" space in the lower right hand corner of each plan sheet)

❑ Sheet Number of Total Sheets:

❑ Section, Township and Range (every plan/profile sheet)

❑ Engineers Stamp (signed and dated)

❑ Project Title (cover sheet)

❑ Utility System Composite Map (showing all proposed utilities on one drawing)

❑ Revision Block

PLAN PORTION STANDARD ITEMS

❑ Centerline and Stations

❑ Edge of Pavement and Width

❑ Right-of-Way and Width

❑ Proposed Survey Monuments Locations and Details

❑ Sidewalk and Width

- ❑ Roadway Sections
- ❑ Existing Utilities (above and below ground)
- ❑ Adjacent Property Lines, Ownership, Parcel Number, and Street Address
- ❑ Identify Street Names, Right-of-Way, Lots
- ❑ Identify Match Existing Sheet Numbers and Stations
- ❑ Easements, Width and Type
- ❑ Define Survey Baseline
- ❑ Stations for Structures
- ❑ Flow Direction Arrows
- ❑ Areas of potential utility conflict.

PROFILE PORTION STANDARD ITEMS

- ❑ Profile Grades (decimal FT./FT.)
- ❑ Existing Ground
- ❑ Scale (horizontal and vertical)
- ❑ Stationing
- ❑ Vertical Elevation Increments each side of each sheet.
- ❑ Existing Utilities (if available)
- ❑ Areas of potential utility conflict.

Misc.

- ❑ Detail Sheet
- ❑ General Notes

SANITARY SEWER

System Map : 1" = 300' showing existing and proposed mains, structures and lift stations if required.

Plan View.-

- ❑ Manhole
- ❑ Station Shown at Each Manhole (watch spacing)

- ❑ Manholes Numbered
- ❑ Manhole Type Designation
- ❑ Flow Direction (with arrow on pipe)
- ❑ Depth at Property Line and Distance from Downhill Manhole for Side Sewer
- ❑ Distance from Water Lines
- ❑ Service to Each Lot
- ❑ Service Cleanout locations

Profile View.

- ❑ Manholes Numbered
- ❑ Invert Elevation Showing Direction, In and Out
- ❑ Rim Elevation
- ❑ Grades Shown (decimal form FT./FT.) (minimum slopes)
- ❑ Type of Pipe
- ❑ Size of Pipe
- ❑ Length of Pipe (in L.F CL of manhole to CL of manhole.)
- ❑ Existing Utilities Shown

Misc.

- ❑ Detail Sheet
- ❑ Sewer General Notes

WATER

System Map (1"=300') showing existing and proposed mains with line size and type, valves, and hydrants, in addition to below

Plan View.

- ❑ Fire Hydrants (BMC 13.20, NFPA 24 & NFPA 291)
- ❑ Blow-off (at end of line)
- ❑ Vacuum and Air Release Valves When Required
- ❑ Tees, Crosses, Elbows, Adapters and Valves need coupling type,

- ❑ Meter Locations
- ❑ Valves (2 each tee min., 3 each cross min.)
- ❑ Fire Department Connection
- ❑ Thrust Blocking Required at all Fittings Including In-Line Valves
- ❑ Distance from Sewer
- ❑ Service to Each Lot (include irrigation service)
- ❑ Fire sprinkler connection

Profile View.

- ❑ Fixtures (tees, crosses, hydrants)
- ❑ Valves and Couplers
- ❑ Type of Pipe
- ❑ Size of Water main
- ❑ Length of Water main In L.F.
- ❑ Grades (Engineered Design Grade to F.L.)

Misc.

- ❑ Detail Sheet
- ❑ Water General Notes

STORM SEWER

Drainage and Erosion Control Plan Report

- ❑ Cover Sheet
- ❑ Table of Contents
- ❑ Section 1 - Proposed Project Description
- ❑ Section 2 - Existing Conditions
- ❑ Section 3 - Infiltration Rates/Soils Report
- ❑ Section 4 - Wells
- ❑ Section 5 - Fuel Tanks
- ❑ Section 6 - Sub-Basin Description
- ❑ Section 7 - Analysis of the I00-Year Flood

- ❑ Section 8 - Aesthetic Considerations for Facilities
- ❑ Section 9 - Downstream Analysis
- ❑ Section 10 - Covenants, Dedications, Easements

Erosion Control Plan Report

- ❑ Section 1 - Construction Sequence and Procedure
- ❑ Section 2 - Trapping Sediment
- ❑ Section 3 - Permanent Erosion Control and Site Restoration
- ❑ Section 4 - Geotechnical Analysis and Report
- ❑ Section 5 - Inspection Sequence

Drawings and Specifications

- ❑ Vicinity map
- ❑ Project Boundaries
- ❑ Sub-Basin Boundaries
- ❑ Off-Site Area Tributary to Project
- ❑ Contours
- ❑ Major Drainage Features
- ❑ Flow Path

Site Map

- ❑ Existing Topography at Least 50 Feet Beyond Site Boundaries
- ❑ Finished Grades
- ❑ Existing Structures within 100 Feet of Project Boundary
- ❑ Utilities
- ❑ Easements, Both Existing and Proposed
- ❑ Environmentally Sensitive Areas
- ❑ 100 Year Flood Plain Boundary
- ❑ Existing and Proposed Wells within 1,200 feet of Proposed Retention Facility
- ❑ Existing and Proposed Fuel Tanks
- ❑ Existing and Proposed On-Site Sanitary Systems within 100 Feet of
- ❑ Detention/Retention Facilities

- ❑ Proposed Structures Including Roads and Parking Surfaces
- ❑ Lot Dimensions and Areas
- ❑ Proposed Drainage Facilities and Sufficient Cross-Sections and Details to Build

Plan View - Conveyance System

- ❑ Station and Number at each Manhole/Catch Basin
- ❑ Manhole/Catch Basin Type and Size
- ❑ Manhole/Catch Basin Rim Elevation
- ❑ Flow Direction with Arrow on Pipe/Channel
- ❑ Type and Size of Pipe
- ❑ Length of Pipe in Lineal Feet

Profile View - Conveyance System

- ❑ Station and Number at each Manhole/Catch Basin
- ❑ Rim Elevation
- ❑ Invert In and Out
- ❑ Length of Pipe in Lineal Feet
- ❑ Grades (FT/FT)
- ❑ Design Velocity

Work Map

- ❑ Unit Areas (including Off-Site Contributing Areas)
- ❑ Percentage Impervious
- ❑ Average Slope
- ❑ Estimated Ultimate Infiltration Rate
- ❑ Length, Slope, Inverts Overland Flow Paths and Distances
- ❑ Soil Types
- ❑ Spot Water Surface Elevations, Discharges and Velocities
- ❑ Design Event

Erosion Control Drawing

- ❑ Soil Types

- ❑ Locations of Soil Pits and Infiltration Tests Construction
- ❑ Entrance Detail
- ❑ Silt Fences and Traps
- ❑ Mulching and Vegetation Plan
- ❑ Clearing and Grubbing Limits
- ❑ Existing and Finished Grade
- ❑ Details and Locations of all BMPs Recommended
- ❑ Location and Details of Temporary Sediment Ponds

Maintenance Report

- ❑ Required Type and Frequency of long term Maintenance
- ❑ Identification of Responsible Maintenance Organization
- ❑ Frequency of Sediment Removal
- ❑ Cleaning of Catch Basins
- ❑ Vegetation Control
- ❑ Annual Cost Estimate of Maintenance
- ❑ Construction Inspection Report

Misc.

- ❑ Detail Sheet
- ❑ Storm General Notes

STREET

Plan View.

- ❑ Flow Direction Arrows at Curb Returns Showing Grade
- ❑ Spot Elevations on Curb Returns
- ❑ Station PC, PT, Pi and Intersections
- ❑ Curve Information Delta, Radius, Length and Tangent
- ❑ BCR and ECR (Begin Curb Radius, End Curb Radius)
- ❑ Identify All Field Design Situations

- ❑ Typical Sections
- ❑ Pavement Marking Details With Station and Offset
- ❑ Sidewalks
- ❑ Driveway Entrances

❑ Station
❑ Width, Material (AC, PCC)
❑ Driveway Type
❑ Handicap Ramps - Detail and Type

Profile View-

❑ Vertical Information VPI, BVC, EVC, AP, Low Point, High Point
❑ Show Grades in Decimal Form with (+ Or -) Slope
❑ Super Elevated Roadways
❑ Detail - Show Transitions
❑ Special Detail Showing Gutter Flowing Adequately

Misc.

❑ Detail Sheet
❑ Street General Notes
❑ AASHTO Street Design Worksheet, With Soils Report, if Applicable

ILLUMINATION AND SIGNALS

Lighting

❑ Station and Offset to Fixtures
❑ Pole Type, Including Manufacturer and Model Number
❑ Mounting Height, Arm Length, Anchor Bolt Size and Pattern
❑ Power Source
❑ Wire Size, Type, Conduit
❑ Line Loss Calculations
❑ Luminaire Type, Lamp Wattage
❑ Location of Service Disconnects (5% Max. Voltage Drop from Source to Farthest Luminaire)

- ❑ J-Box Location and Connections (include station and offset)
- ❑ Fusing

Signals (Follow WSDOT Specs Unless Otherwise Required by the City)

- ❑ Station and Offset to Signal Base, Cabinets, Ped. Lead, Loops, etc.
- ❑ Wiring Schedule
- ❑ Signal Heads and Mounting Assembly
- ❑ Detection Loops
- ❑ Opticom
- ❑ Control Cabinet, Size and Layout
- ❑ Power Source
- ❑ Conduit
- ❑ Wire Size and Type
- ❑ Construction Notes
- ❑ J-Box Schedule
- ❑ Pedestrian Signal Type with Push Button Controller Type, Configuration, and Wiring Schematic
- ❑ Detail Sheet
- ❑ Lighting General Notes
- ❑ Line Loss Calculations

MISCELLANEOUS

- ❑ Easements and/or Dedication Deeds
- ❑ Contract Documents/Specifications
- ❑ Sheet Index (on title sheet if required)
- ❑ Field Verify Note on DWG.
- ❑ Note to "Expose Connection Points And Verify Fittings 48 Hours

Prior To Distributing Shut-Down Notices"

- ❑ Call Before You Dig Note
- ❑ Signing - Temporary And Permanent
- ❑ Channelization
- ❑ Location of Cluster Mailboxes

- ❑ Location of School Bus (and/or WTA) Bus Shelter/Pad, and Turnouts.

3.09.000 PLAN REVIEW

All plans are to be submitted to the City Engineering Department along with a completed Plan Review Application form and a signed City of Blaine Customer Service Request form. Any necessary easements or dedications shall be submitted for review along with the plans. A cursory check of the plans against the plans checklist on the preceding pages will be made by City staff. If the plans meet the minimum checklist requirements as to context, they will be routed to the appropriate City staff and the plan review process begins.

The initial turn around time for the first review of plans submitted is normally two weeks, depending on the scope of the project. The engineer is then requested to submit the original drawings for approval or is notified of additional required revisions. Additional review time will be required if revisions are necessary.

If plans require a third submittal, additional fees will be levied as established by resolution of the city council. 'Third Submittal" shall mean the third and any subsequent submittal of construction drawings, specifications, drainage calculations, and/or other information that requires additional plan checking pertaining to the construction of city facilities.

Approved plans will be returned to the Engineer only after the plan checking fees have been paid.

Plans that have been approved more than one year before construction begins (i.e., a preconstruction meeting scheduled and inspection fees paid) shall be subject to a supplemental review based on the hourly rate as established for third submittal.

3.10.000 CONSTRUCTION CONTROL

Work performed for the construction or improvement of City roads and utilities whether by or for a private developer, by City forces, or by a City contractor, shall be done to the satisfaction of the City and in accordance with approved plans. It is emphasized that no work shall be started until such plans are approved. Any revision to such plans shall be approved by the City before being implemented. Failure to receive the City's approval can result in removal or modification of construction at the contractor's or developer's expense to bring it into conformance with approved plans.

3.11.000 INSPECTION

All work performed within the public right-of-way or easements, or as described in these standards, whether by or for a private developer, by City forces, or by a City contractor, shall be done to the satisfaction of the City and in accordance with the WSDOT/APWA Standard Specifications, any approved plans and these standards. Unless otherwise approved, any revision to construction plans must be approved by the City before being implemented.

It is the responsibility of the developer, contractor, or their agents to notify the City in advance of the commencement of any authorized work. A preconstruction meeting and/or field review shall be required before the commencement of work. Inspection fees shall be paid on or before the preconstruction meeting. Any necessary easements or dedications are required before plan approval.

It is the responsibility of the developer, contractor or their agents to have an approved set of plans and any necessary permits on the job site whenever work is being accomplished.

The City shall have authority to enforce these standards as well as other referenced or pertinent specifications. The City will appoint project engineers, assistants and inspectors as necessary to inspect the work and they will exercise such authority as the City Engineer may delegate.

All specific inspections, test measurements or actions required of all work and materials are set forth in their respective chapters herein. Tests shall be performed at the developer's or contractor's expense.

Failure to comply with the provisions of these standards may result in stop work orders, removal of work accomplished, or other penalties as established by ordinance.

A project is considered final when a letter of acceptance is issued by the City to the party responsible for the project.

No water or electric meters shall be released for any lot or building served by a project until final acceptance has been granted.

3.12.000 FEES

Fees, charges or bonding requirements shall be as established by the city council by the passage of a resolution adopting a fee, charge, and bonding requirement schedule except where specifically set forth in the Blaine Municipal Code (BMC). The city council shall further set the dollar penalty for failure to pay said fee or charge in a timely manner by passage of such resolution. A copy of the fee schedule can be found in the appendix. It is the applicant's responsibility to verify that the fees in the appendix are current.

3.12.010 Inspection Fees

Inspection fees are included with the original plan review fee. Additional Inspection Fees may be charged if inefficient contractor operations result in substantial delays.

3.12.020 Additional Fees

In addition, there may be various miscellaneous service and connection fees and charges. The applicant is strongly urged to request an estimate of these fees and charges by completing a Utility Service Request for the proposed Development, available from the Building Official.

3.13.000 PERMITS

A Right-of-Way Use Permit shall be obtained before any person, firm or corporation shall commence or permit any other person, firm or corporation to commence any work to grade, pave, level, alter, construct, repair, remove, excavate or place any pavement, sidewalk, crosswalk, curb, driveway, gutter, drain, sewer, water, conduit, tank, vault, street banner or any other structure, utility or improvement located over, under or upon any public right-of-way or easement in the City of Blaine, or place any structure, building, barricade, material, earth, gravel, rock, debris or any other material or thing tending to obstruct, damage, disturb, occupy, or interfere with the free use thereof or any improvement situate therein, or cause a dangerous condition. A separate permit shall be obtained for each separate project.

In the case of work contracted for by the Department of Public Works, the signing of the contract shall constitute a Right-of-Way Use Permit.

Much of the work covered under these standards will require multiple permit authority review and approvals. Several types of permits and approvals require prior approval from the authority before a building or other permit can be issued. Any questions regarding information about permits, approvals and agreements should be directed to the appropriate departments.

The following general categories describe some of the permits, approvals and agreements, along with issuing permit/code authority identified in parentheses:

3.13.010 Environmental Review

For most projects, an Environmental Checklist must be completed by the applicant and submitted along with plans, specifications, and other information when approval or permits are being requested for a project. The Department of Community and Economic Development conducts the Environmental Review and makes a SEPA Threshold Determination for the City.

3.13.020 Construction Permits

1. Land Clearing Permit (The Department of Community and Economic Development). A Land Clearing Permit is required for all significant tree alterations
2. Building Permit (Building Division of the Department of Community and Economic Development). A Building Permit is required for most all construction work including alteration, repairs and demolition.
3. Right-of-Way Use Permit (Public Works Department). A Right-of-Way Use Permit is required for any work within the right-of-way as outlined at the beginning of this Chapter. Such work may include utilities work, lane closures, driveways, curbs, sidewalks, and haul routes. Permission to temporarily close a street or portion thereof for construction activities is obtained through the Right-of-Way Use Permit.

3.13.030 Approvals and other Permits

There are several other permits or approvals which may be required and referred to in these Standards: Site Plan Review; plat and short plat approvals; and Certificate of Occupancy.

In addition, there are several other City approvals (land use) which may have to be obtained prior to the above listed permits and which may affect the Standards as contained in this document: Zoning Revision; Conditional use; Variances; Planned Unit Development; and Shoreline Substantial Development Permit.

3.14.000 BONDING

Bonds or other allowable securities may be required by the City to guarantee the performance of or maintenance of required work. The type and amount of security shall be per code, or, if not specified, be at the discretion of the City. Types of securities include but are not limited to a bond with a surety qualified to do a bonding business in this state, a cash deposit, an assigned savings account, or letter of credit or real property.

The following are the most frequent bonds required:

3.14.010 Performance Bond.

No building permit shall be issued until all public improvements are completed and final acceptance granted or, with the approval of the City Engineer, a performance bond as outlined above posted with the City in and amount equal to 150 percent of the cost of the public works improvements is posted with the City. No certificate of occupancy shall be issued until all public works improvements are completed and approved unless otherwise allowed by the City Engineer. (BMC 17.16.030)

3.14.020 Maintenance bond.

Prior to final Public Works approval, the permittee or the contractor for the permittee shall post with the city a maintenance bond for the guarantee of the public works improvements in an amount equal to 10 percent of the estimated cost of the improvements for a period of one year after the completed job is accepted by the City. Release of bond will occur one year from the date of City acceptance if all maintenance has been accepted by the City. (BMC 17.16.030)

3.15.000 UTILITY LOCATIONS

3.15.010 Utilities within a right-of-way.

Utilities as defined in Chapter 3, within a right-of-way or easement on new roads or in roadways where existing utilities are not in conflict, shall be located as shown in typical sections on Drawing 4-10. Where existing utilities are in place, new utilities shall conform to these standards as nearly as practical and yet be compatible with the existing installations. Deviations of location shall be approved by the City Engineer. Existing utilities shall be shown using the best information available. This verification may require exploration/excavation (potholing) if utilities are in conflict with proposed design.

The contractor/developer shall be responsible for utility locates in conjunction with their project until final Public Works approval is given.

3.15.020 Compliance

All new utilities other than those located on private property shall comply with provisions as set forth in BMC 13.04 for water, BMC 13.08 for sewer, BMC 13.16 for Electrical, and provisions as set forth in franchise or use agreements between the City and the utility.

Utilities converted from overhead to underground on existing roadways may be located within the right-of-way, subject to the approval of the City Engineer.

3.15.030 Right-of-Way Use Permit

A Right-of-Way Use Permit is required of any utility for any work done within the right-of-way and shall comply with all provisions as set forth in BMC 12.04.010 and Chapter 3 of these standards.

3.16.000 EASEMENTS

3.16.010 Required

Where public utilities and/or their conveyance systems cross private lands, an easement must be granted to the City. The Engineering Department will generally process, record and file all easements. If the property is platted the easement may be conveyed when the short plat or

final plat is filed. All easements not shown on a plat must be prepared by a licensed land surveyor or engineering firm capable of performing such work.

3.16.020 Width

Easement widths shall be 15 feet for a single utility and 20 feet for dual utilities. Construction easements shall be 30 feet minimum in total width, including the permanent easement. When trench depths dictate or where pipe diameter or vault widths exceed four feet, a wider easement may be required by the City Engineer.

3.16.030 Approval

Easements are required to be submitted in draft, unsigned for review and approval prior to plan approval. Signed copies are required prior to plan approval. Any change in design which places an amenity, i.e., water, sewer, sidewalk, etc., outside of the easement may necessitate stopping of construction until plans and easements can be resubmitted and approved. Plan review fee shall be based on the rate as established for third submittal fee. Easements will be filed by the city upon satisfactory completion of the work.

A copy of the Easement Preparation Standards can be found in the appendix.

3.17.000 LATECOMERS AGREEMENTS

Any person who constructs a water, sewer, electrical, storm drainage or street extension at the direction of the City, in excess of that which is required to meet minimum standards or which meets minimum standards and will benefit properties abutting the new main, may, with the approval of the City Engineer, enter into a contract with the City which will allow the developer to be reimbursed for that portion of the construction cost that benefits the adjoining properties and/or is in excess of the minimum standard. This contact is commonly termed a "Latecomers Agreement." The format for a Latecomers Agreement must be submitted for review and approval prior to plan approval to be considered. Latecomers Agreements submitted after plan approval will not be accepted.

The developer is responsible for initiating and executing and, after City approval, paying the filing fees for the latecomers agreement. The agreement shall include a list of those properties which will benefit from the extension, a map outlining and designating these properties, legal descriptions as required by the City, and backup data supporting the costs submitted. The City will collect the latecomers fee from persons wanting to connect to the water or sewer extension and subsequently see that the developer receives appropriate payment. (BMC 13.08.513 & BMC 13.04.150)

3.18.000 UTILITY EXTENSION

3.18.010 Process

Anyone who wishes to extend any City utility should contact the Department of Public Works for an Extension/Connection Fee Estimate and any special extension requirements.

3.18.020 Extents

Utility mains shall be extended to and through the extremes of the property being developed for loop closures and/or future development as determined by the City.

3.19.000 ANNEXATION REQUIREMENT

Owners of properties lying outside of but not contiguous to the City must legally commit their property to eventual annexation prior to being served by the City's utility system.

These annexation requirements will be applied to all extensions of the City's utility to areas outside the City limits. Anyone who desires to extend the City's utility system should contact the Department of Public Works for specific annexation requirements.

3.20.000 TRAFFIC CONTROL

3.20.010 Responsibility

The developer/contractor shall be responsible for interim traffic control during construction on or along traveled roadways. Traffic control shall follow the guidelines of the WSDOT/APWA Standard Specifications. All barricades, signs and flagging shall conform to the requirements of the MUTCD.

City utilities constructed within Whatcom County right-of-way shall follow all traffic control requirements as set forth by Whatcom County Department of Public Works and MUTCD.

Signs must be legible and visible and should be removed at the end of each work day if not applicable after construction hours.

3.20.020 Notification

When road closures and detours cannot be avoided the contractor or developer shall notify the Department of Public Works Construction Inspectors. The City may require a detour plan to be prepared, submitted and approved prior to closing any portion of a City roadway.

3.20.030 Right-of-Way Use Permit

A Right-of-Way Use Permit may be required before work in the road can commence. See requirements in Chapter 3 permits section and utility locations section and contact the Department of Public Works for specific permit information.

3.21.000 CALL BEFORE YOU DIG

All developers/contractors are responsible for timely notification of all utilities in advance of any construction in right-of-way or utility easements. The utilities one-call Underground Location Center phone number is 1-800-424-5555.

CHAPTER 6 – WATER

6.01.000 GENERAL

1. Any extension of the Blaine Municipal Water System must be approved by the Department of Public Works and shall conform the City of Blaine Water System Plan, Washington State Department of Health, APWA WSDOT Standard Specifications for Road, Bridge and Municipal Construction and the American Water Works Association Standard.
2. In designing and planning for any extension or connection, it is the developers responsibility to determine that adequate water for both domestic use and fire protection is attainable. The developer must show, in the proposed plans, how water will be supplied and whether adequate water pressure will be attained in case of fire. An analysis of the system may be required if it appears that the system might be inadequate.
3. Anyone who wishes to extend or connect to the City's water system should contact the Department of Public Works for a Public Utilities Construction Agreement.
4. Prior to the release of any water meters, all Public Works improvements must be completed and approved including granting of right-of-way or easements, execution of a Deed Of Conveyance of Public Improvements and all applicable fees must be paid.
5. Issuance of building permits for new construction of single family subdivisions shall not occur until final Public Works approval is given. For commercial projects, building permits may be issued upon completion and acceptance of the required fire protection facilities. A construction bond, in accordance with Chapter 3 of these Standards, will be required for the remaining public works improvements. Certificate of occupancy will not be issued until final Public Works approval is given for all improvements.

6.02.000 DESIGN STANDARDS

1. The design of any water extension/connection shall conform to this Chapter and any applicable standards as set forth in Chapter 3
2. The layout of extensions shall provide for the future continuation and/or "looping" of the existing system as determined by the City. In addition, main extensions shall be extended as required in Chapter 3.
3. The General Notes on Standard Drawing 6-A shall be included on any plans dealing with water system design.

6.03.000 MAIN LINE

6.03.010 Main Size

1. Water mains shall be sized to provide adequate domestic plus fire flow at the required residual pressure. Fire flow requirements will be determined by the Uniform Fire Code, as amended, however, the quantity of water required will in no case be less than 750 GPM at 20 psi residual pressure.
2. The minimum water main size shall be 4 inches in a cul de sac under 600 feet in length, 6 inches diameter on a looped system, and 8 inches for a dead end as long as fire flow requirements can be met. Nothing shall preclude the City from requiring the installation of a larger sized main if the City determines a larger size is needed to meet fire protection requirements or for future service.
3. No dead end 8 inch main shall be longer than 1,200 lineal feet.

6.03.020 Materials

All pipe for water mains shall have flexible gasketed joints and shall comply with the following type:

Ductile Iron Pipe:

Ductile iron pipe shall conform to AWWA C 151 Class 50 and have a cement mortar lining conforming to AWWA C 104. All pipes shall be joined using non-restrained joints which shall be rubber gaskets, push on type or mechanical joint, conforming to AWWA C Ill.

Pipe shall be enclosed within polyethylene membrane manufactured for such purpose.

6.03.030 Fittings

All fittings for ductile iron pipe shall be ductile iron compact fittings conforming to AWWA C 153 or Class 250 gray iron conforming to AWWA C 110 and C 111. All shall be cement mortar lined conforming to AWWA C 104. Plain end fittings shall be ductile iron if mechanical joint retainer glands are installed on the plain ends. All fittings shall be connected by flanges or mechanical joints.

6.03.040 Cover

The minimum cover for all water mains from top of pipe to finish grade shall be 36 Inches unless otherwise approved.

6.04.000 CONNECTION TO EXISTING WATER MAIN

It shall be the Contractor's responsibility to field verify the location and depth of the existing main and the fittings required to make the connections to the existing mains. All connections to the existing main shall be "Hot Taps" performed by a qualified contractor licensed by the State of Washington. Cut-ins will not be allowed unless expressly approved by the City Engineer.

6.04.010 Service Interruption

The contractor shall obtain a permit from the City a minimum of 72 hours prior to any planned connection to an existing pipeline. This Includes all cut-ins and live taps. Notice is required so any disruptions to existing services can be scheduled. The City will notify customers involved or affected of the water service interruption. The contractor shall make every effort to schedule water main construction with a minimum interruption of water service. In certain situations, the City may dictate scheduling of water main shutdowns so as not to impose unnecessary shutdowns during specific periods to existing customers.

6.05.000 HYDRANTS

6.05.010 Connection to main.

The lead from the service main to the fire hydrant shall be ductile iron cement mortar lined Class 52 no less than 6 inches in diameter. (BMC 13.04)

6.05.020 Materials.

1. Fire Hydrants, shall have two, **2-1/2** Inch outlets and one 4-1/2 inch pumper port outlet. The main port shall be supplied with a five inch storz metal face adapter. (See Standard Drawing No. 6-8) All outport threads shall be National Standard thread. The valve opening shall be 5-1/4 inch diameter. The hydrant shall have a positive

and automatic barrel drain and shall be of the "safety" or break-away style. (BMC 13.04)

2. Hydrants shall be Waterous Pacer 100 Model WB-67, Clow Model F-2505 or Mueller Centurion Model A-421. All hydrants shall be tagged as "Out of Service" until, system is approved.

6.05.030 Spacing.

The Department of Public Works and Blaine Fire Department work together to insure that adequate hydrant spacing and Installation are achieved. At a minimum hydrants shall be placed as per BMC 13.20.090, BMC 13.20.100 & BMC 13.20.110.

6.05.040 Installation.

Fire hydrants shall be installed as shown in standard detail number 6-8.

6.05.050 FDC

For requirement regarding use, size and location of a fire department connection (FDC) and/or post indicator valve contact Blaine Public Saftey Department, Fire Division. Location of FDC shall be shown on water plans.

6.05.060 Guard Posts

Where needed, the Department of Public Works or Blaine Fire Department may require hydrants to be protected by two or more posts, each four inches in diameter by five feet in height made of either reinforced concrete or steel (BMC 13.60.140).

6.05.070 Building Permit

Fire hydrants must be Installed, tested, and accepted prior to the Issuance of a building permit.

6.06.000 VALVES

6.06.010 General.

All valves and fittings shall be ductile iron with ANSI flanges or mechanical joint ends. All existing valves shall be operated by City employees only.

Valves shall be installed in the distribution system at sufficient intervals to facilitate system repair and maintenance, but in no case shall there be less than one valve every 1000 feet. Generally, there shall be two valves on each tee and three valves on each cross. Specific requirements for valve spacing will be made at the plan review stage.

6.06.030 Gate Valves, 4 inch to 16 inch.

The design, materials and workmanship of all gate valves shall conform to AWWA C509-80 latest revision. Gates valves shall be resilient wedge non-rising stem (NRS) with two internal 0-ring stem seals. Gate valves shall be Mueller, M & H, Kennedy, Clow R/W or Waterous Series 500.

Gate valves shall be used on all 4 to 16 inch lines.

6.06.040 Valve Box.

All valves shall have a standard Inland Foundry, Blaine 248 Water valve box set to grade with a 6 inch ASTM 3034 SDR 35 PVC riser from valve to within 4 to 6 inches of valve box top. If valves are not set in paved area, a 3 foot by 3 foot by 4 inch concrete pad shall be set around each valve box at finished grade. In areas where valve box falls in road shoulder, the ditch and shoulder shall be graded before placing asphalt or concrete pad. See standard drawing 6-12.

6.06.050 Valve marker Post.

Valve marker posts shall be 4 inch x 4 inch reinforced concrete or schedule 40 steel posts 5 feet long stamped with 'W' and distance to valve. Post shall be painted with 1 base coat and 2 coats oil base enamel. See standard drawing 6-9.

6.06.060 Casing

Steel casing pipe shall be schedule 20 steel or equal. Pipe spacers shall be Cascade style CC5 with 8 inch runners as available from Cascade Waterworks or approved equal. Casing pipe and spacers shall be sized for pipe being installed. Install minimum of three spacers per section of pipe.

6.07.000 AIR AND VACUUM RELEASE VALVE

Air and vacuum release valves (ARV) shall be as GA Industries, Inc., Mars PA, their Figure 910, or approved equal. Installation shall be as shown on standard drawing 6-9.

The installation shall be set at the high point of the line when required. Where possible, pipes are to be graded to prevent the need for an air release valve. Air release valves may not be required when services are in the vicinity.

6.08.000 BLOWOFF ASSEMBLY

If a fire hydrant is not located at the end of a dead end main, a blowoff assembly shall be required. On water mains which will be extended in the future, the valve which operates the blowoff assembly shall be the same size as the main and provided with a concrete thrust block. The pressure rating for blowoff assemblies shall be 200 psi. Installation shall be as shown on standard drawing 6-10.

6.09.000 BACKFLOW PREVENTION

All water system connections to serve buildings or properties with domestic potable water, fire sprinkler systems, or irrigation systems shall comply with the minimum backflow requirements as established by the Department of Health (DOH) and the City of Blaine.

The installation of all backflow devices is required to protect the existing water system and users from possible contamination. Public Works shall get the certificate for testing of any backflow prevention device before releasing the certificate of occupancy on any building. Washington State Department of Health Certification is required.

Blaine Department of Public Safety, Fire Division will test the fire line and obtain the certificate for underground piping. In any situation, Blaine Department of Public Safety, Fire Division will not test their portion of underground until Public Works has tested and approved their main up to the fire line.

6.10.000 SERVICE CONNECTION

6.10.010 New Development.

All service connections relating to new development may be installed by the developer, subject to the approval of the City, at the time of mainline construction. After the lines have been constructed, tested and approved the owner may apply for a water meter. The City will install a water meter after the application has been made and all applicable fees have been paid. Water meters will be set only after system is inspected and approved.

6.10.020 New Service on an Existing Main.

When water is desired to a parcel fronting an existing main but not served by an existing service, an application must be made to the City. Upon approval of the application and payment of all applicable fees, the City will tap the main, and install the meter, box, and setter.

6.10.030 Materials/Installation.

1. Service lines, main line to property line, shall be one inch high density polyethylene pipe, minimum pressure class 200 psi, Phillips Drisco 5100 Ultra-Line. No glued joints will be accepted. Service lines shall be installed 90 degrees off the main. Wire wrapped around the pipe shall be installed on all service lines and shall terminate at the setter.
2. Service saddle shall be all bronze with stainless steel straps and shall be Romac style 202S, Rockwell 313 or approved equal. All clamps shall have rubber gasket and iron pipe threaded outlets.
3. Corporation stop shall be all bronze and shall be Ford type F1101 or approved equal with iron pipe threads conforming to AWWA C 800. Stainless steal inserts shall be used with pack joints and polyethylene pipe.

6.10.040 Master Meters

Master meters will not be allowed for service to more than one per building. An approved backflow prevention system must be installed in conjunction with any master meter. Deviations to this may be granted by the City Engineer.

6.10.050 Marking Service Lines

The location of all service lines shall be marked on the face or top of the cement concrete curb with a 'W' ¼ inch into concrete.

6.11.000 WATER MAIN/SANITARY SEWER CROSSINGS

1. The Contractor shall maintain a minimum of 18 inches of vertical separation between sanitary sewers and water mains. The minimum cover for water main of 36 inches shall be maintained. Reduction of the separation distance may be granted by the City providing special crossing features are used.
2. The longest standard length of water pipe shall be installed so that the joints will fall equidistant from any sewer crossing. In some cases where minimum separation cannot be maintained, it may be necessary to encase the water pipe and/or sewer service in pipe or concrete. No concrete shall be installed unless specifically directed by the City.

6.12.000 IRRIGATION

1. All irrigation systems shall be installed with an approved backflow prevention assembly approved by AWWA and the Department of Health.
2. Irrigation sprinklers shall be situated so as to not wet any public street or sidewalk.

6.13.000 STAKING

1. All surveying and staking shall be performed by an engineering or surveying firm capable of performing such work. The engineer or surveyor directing such work shall be licensed as a Professional Engineer or Professional Land Surveyor by the State of Washington.
2. A preconstruction meeting shall be held with the City prior to commencing staking. All construction staking shall be inspected by the City prior to construction.
3. The minimum staking of waterlines shall be as directed by the City Engineer or as follows:

6.13.010 Centerline

Stake centerline alignment every 50 feet with cut or fill to invert of pipe maintaining 36 inches of cover over pipe. Cuts are normally not required when road grade has been built to subgrade elevation.

6.13.020 Fixtures.

Stake alignment of all fire hydrants, tees, water meters, setters and other fixtures and mark cut or fill to hydrant flange finished grade.

6.14.000 TRENCH EXCAVATION (Per APWA/WSDOT)

6.14.010 Clearing and Grubbing

Clearing and grubbing where required shall be performed within the easement or public right-of-way as permitted by the City and/or governing agencies. Debris resulting from the clearing and grubbing shall be disposed of by the owner or contractor in accordance with the terms of all applicable permits.

6.14.020 Trenching.

Trenches shall be excavated to the line and depth designated by the City to provide a minimum of 36 inches of cover over the pipe. Except for unusual circumstances where approved by the City, the trench sides shall be excavated vertically and the trench width shall be excavated only to such widths as are necessary for adequate working space as allowed by the governing agency. The trench shall be kept free from water until joining. is complete. Surface water shall be diverted so as not to enter the trench. The owner shall maintain sufficient pumping equipment on the job to insure that these provisions are carried out.

6.14.030 Over Excavation.

The contractor shall perform all excavation of every description and whatever substance encountered and boulders, rocks, roots and other obstructions shall be entirely removed or cut out to the width of the trench and to a depth 6 inches below water main grade. Where materials are removed from below water main grade. the trench shall be backfilled to grade with material satisfactory to the City and thoroughly compacted.

6.14.035 Pipe Laying

Pipe shall be placed in a straight alignment. Pipe shall be wrapped with 8 mil polyethylene membrane designed for such use. Pipe ends shall be plugged at the end of each work day.

6.14.040 Pipe Bearing.

The bottom of the trench shall be finished to grade with hand tools In such a manner that the pipe will have bearing along the entire length of the barrel. The bell holes shall be excavated with hand tools to sufficient size to make up the joint.

6.15.000 THRUST BLOCKING

Location of thrust blocking shall be shown on plans. Thrust block concrete shall be Class B poured against undisturbed earth. A plastic barrier shall be placed between all thrust blocks and fittings.

See Standard Detail Number 6-14 and 6-15 for thrust block locations and calculations.

6.16.000 BACKFILLING

Backfilling and surface restoration shall closely follow Installation of pipe so that not more than 100 feet is left exposed during construction hours without approval of the City. Selected backfill material shall be placed and compacted around and under the water mains by hand tools to a height of 6 inches above the top of the water main. The remaining backfill shall be compacted to 95 percent of the maximum density in traveled areas, 90 percent outside traveled area. Where governmental agencies other than the City have jurisdiction over roadways, the backfill and compaction shall be done to the satisfaction of the agency having jurisdiction. If suitable backfill material, as determined by the City, is not available from trenching operations, the City may order the placing of bedding conforming to 9-30.7A around the water main and gravel base conforming with Section 9-30.7(3) of the Standard Specifications for backfilling the trench.

6.17.000 STREET PATCHING AND RESTORATION

See Chapter 4 for requirements regarding street patching and trench restoration.

6.18.000 HYDROSTATIC TESTS (Per APWA/WSDOT)

1. Prior to the acceptance of the work, the installation shall be subjected to a hydrostatic pressure test of 200 psi for 15 minutes, and any leaks or imperfections developing under said pressure shall be remedied by the contractor. No main shall be hydrostatically tested until the lines are flushed of chlorine. The main shall be tested between valves. Insofar as possible, no hydrostatic pressure shall be placed against the opposite side of the valve being tested. Test pressure shall be maintained while the entire installation is inspected.
2. The contractor shall provide all necessary equipment and shall perform all work connected with the tests. Tests shall be made after all connections have been made and the roadway section is constructed to subgrade. This is to include any and all connections as shown on the plan. The contractor shall perform the test to assure that the equipment to be used for the test is adequate and in good operating condition and the air in the line has been released before requesting the City to witness the test.

3. See "Backflow Prevention" in this Chapter for testing responsibilities for backflow prevention devices.

6.19.000 STERILIZATION AND FLUSHING

1. Sterilization of water mains shall be accomplished by the contractor in accordance with the requirements of the Washington State Department of Health and in a manner satisfactory to the City. At no time shall chlorinated water from a new main be flushed into a body of fresh water. This is to include lakes, rivers, streams, drainage ways, and any and all other waters where fish or other natural water life can be expected.
2. When a chlorine concentration has been established throughout the line, (50 PPM) the valves shall be closed and the line left undisturbed for 24 hours. The line shall then be thoroughly flushed and water samples taken by the City at least 24 hours after flushing and disinfecting for approval by the local health agency. Should the initial treatment result in an unsatisfactory bacteriological test, the original chlorination procedure shall be repeated by the contractor until satisfactory results are obtained. Testing and sampling shall take place after all underground utilities are installed and compaction of the roadway section is complete.

City of Blaine Standard Details

Title	Drawing
Water Main Installation General Notes	6 - A
Vertical Concrete Blocking	6 - 1
Horizontal Thrust Blocking	6 - 2
Concrete Slope Anchor	6 - 3
Tapping Tees	6 - 5
PRV/Meter Vault Access Ladder	6 - 7
Type A Fire Hydrant Installation	6 - 8
Fire Hydrant Guard Post & Valve Marker Post	6 - 9
Standard Blow-Off Assembly	6 – 10
6” Diameter Fire Service (For Future Use)	6 –10A
2” Air & Vacuum Release Valve Assembly	6 - 11
2” Air & Vacuum Release Valve Assembly (12” Main Or Larger)	6 - 11A
1” Air & Vacuum Release Valve Assembly (10” Main Or Smaller)	6 - 11B
Valve Operating Extension	6 - 12
Standard Pressure Reducing Station	6 - 13
1” Single Water Service Connection Detail	6 – 14
3/4" Service Connection Detail	6 – 14A
1” Dual Water Service Connection Detail	6 - 15
Compound Water Meter Inst; 3” to 10” w/optional bypass	6 – 19
Typical Compound Water Meter Installation 3” to 10”	6 – 19A
Typical Turbine Water Meter Installation 3” to 10”	6 - 20
Typical Turbine Water Meter Installation 3” to 10” With Optional Bypass	6 - 20A
Residential Fire Sprinkler Check System	6 - 21
Residential Fire Sprinkler Inside Check System	6 - 22
3/4" to 2” Outside Installed Irrigation or Fire Sprinkler Double Check Valve Assembly	6 - 24
3/4” to 2 ½” Inside Installed Double Check Valve Assembly	6 - 25
Double Check Valve Assembly (Private Installation) (1 ½” & 2” Sizes)	6 - 26
Double Check Valve Assembly (Private Installation) (3” To 6” Sizes)	6 - 27
Double check valve assembly (Private Installation) (8” To 10” Sizes)	6 - 28
Double Check Valve Assembly	6 - 29
Double Check Valve Assembly With Detector (For Fire Lines)	6 - 30
Reduced Pressure Principle Backflow Assembly	6 - 31
Reduced Pressure Principle Backflow Assembly (For Firelines)	6 - 32
Reduced Pressure Principle Backflow Assembly (For Firelines)	6 - 32A

Individual Pressure Reducing Valve Assembly..... 6 - 33
3” To 10” Meter Installation Domestic & Irrigation ..... 6 - 34
3” TO 10” Domestic & Irrigation Turbine Meter Installation ..... 6 - 35
Tapping Tees..... 6 - 36

GENERAL NOTES (WATER MAIN INSTALLATION)

1 All workmanship and material shall be in accordance with City of Blaine Development Standards and the State of Washington Standard Specifications for Road, Bridge and Municipal Construction as amended.

2. A preconstruction meeting shall be held with the City prior to the start of construction.

3. Water mains shall be ductile iron cement mortar lined thickness Class 50. Pipe shall be enclosed within polyethylene membrane manufactured for such purpose.

4. Gate valves shall be resilient wedge, NRS (Non Rising Stem) with O-rings seals. Valve ends shall be mechanical joint or ANSI flanges. Valves shall conform to AWWA 509-94. Valves shall be Mueller, M & H, Kennedy, Clow R/W or Waterous Series 500. existing valves to be operated by City employees only.

5. Hydrants shall be Waterous Pacer 100 Model WB-67, Clow Model F-2505 or Mueller Centurion Model A-421. Hydrants shall be bagged until system is approved. AWWA C 502-94

6. All lines shall be chlorinated and tested in conformance with the above referenced specification (Note 1).

7. Pipe installer shall place pipe in a straight alignment. Pipe installer shall wrap pipe with 8 MIL polythylene membrane designed for such use. Pipe installer shall plug pipe ends at end of each work day.

8. Provide traffic control plan(s) in accordance with MUTCD if applicable.

9. All water mains shall be staked for grades and alignment by an engineering or surveying firm capable of performing such work.

10. All service lines shall be installed perpendicular to the main and the locations shall be marked on the face of the curb with an embossed 'W' 1/4 Inch into concrete.

11. Call Underground Locate at 1-800-424-5555 a minimum of 48 hours prior to any excavations.

12. The Developoer shall coordinate with the City prior to scheduling any shutdown of the water system. Where connections require "field verification", connection points will be exposed by contractor and fittings verified 48 hours prior to distributing shut-down notices.

13. At any connection to an existing line where a new valve is not installed, the existing valve must be pressure tested to City standards prior to connection. If an existing valve fails to pass the test, the contractor shall make the necessary provisions to test the new line prior to connection to the existing system or install a new valve.

14. The City of Blaine's Public Works Department Inspector shall observe placement and installation of all sewer pipe bedding material, creation of the requisite pipe cradle in the bedding material, installation and connection of the pipes themselves, and backfill placement and compaction,to ensure compliance with City of Blaine Development Guildline and Public Works Standards No. 6.14. Contractor shall coordinate/schedule all observations.

NO.	REVISION DESCRIPTION	PREP'D BY	DATE	APPROVED
1	Revised Note 3	WRS	10/07	
	PREPARED FOR STD. MANUAL	WRS	3/96	

WATER MAIN INSTALLATION GENERAL NOTES

CITY OF BLAINE
DEPT. OF PUBLIC WORKS

SIZE	PREV. DWG NO.	PUBLIC WORKS DRAWING NUMBER	
A		6-A	
SCALE		SHEET OF	REV. NO.

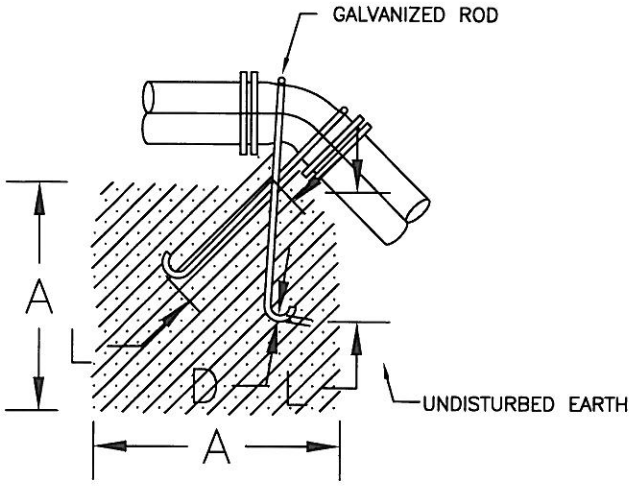

VERTICAL BLOCKING
FOR 45° BENDS

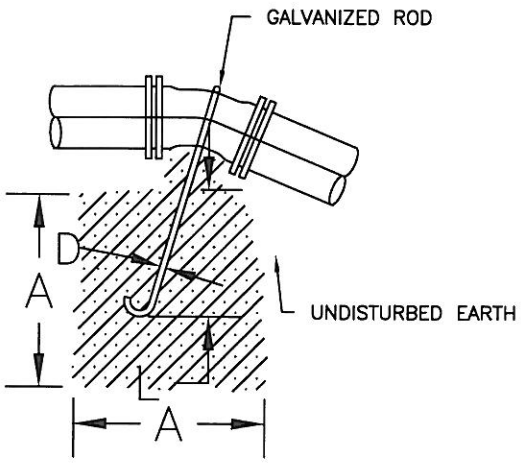

VERTICAL BLOCKING FOR
11–1/4°, 22–1/2°
& 30° BENDS

VERTICAL BLOCKING FOR 11–1/4°, 22–1/2°, 30° BENDS					
PIPE SIZE	VB	CU. FT.	A*	D	L
4"	11–1/4°	8	2.0'	3/4"	1.5'
	22–1/2°	11	2.2'		2.0'
	30°	17	2.6'		
6"	11–1/4°	11	2.2'	3/4"	2.0'
	22–1/2°	25	2.9'		
	30°	41	3.5'		
8"	11–1/4°	16	2.5'	3/4"	2.0'
	22–1/2°	47	3.6'		
	30°	70	4.1'	3/4"	2.5'
12"	11–1/4°	32	3.2'	3/4"	2.0'
	22–1/2°	88	4.5'	7/8"	3.0'
	30°	132	5.1'		
16"	11–1/4°	70	4.1'	7/8"	3.0'
	22–1/2°	184	5.7'	1–1/8"	4.0'
	30°	275	6.5'	1–1/4"	
20"	11–1/4°	91	4.5'	7/8"	3.0'
	22–1/2°	225	6.1'	1–1/4"	4.0'
	30°	330	6.9'	1–3/8"	4.5'
24"	11–1/4°	128	5.0'	1"	3.5'
	22–1/2°	320	6.8'	1–3/8"	4.5'
	30°	480	7.9'	1–5/8"	5.5'

VERTICAL BLOCKING FOR 45° BENDS					
PIPE SIZE	VB	CU. FT.	A*	D	L
4"	45°	30	3.1'	3/4"	2.0'
6"		68	4.1'		
8"		123	5.0'		
12"		232	6.1'	3/4"	2.5'
16"		478	7.8'	1–1/8"	4.0'
20"		560	8.2'	1–1/4"	
24"		820	9.4'	1–3/8"	4.5'

* "A"=LENGTH, WIDTH & DEPTH

NOTE: CONCRETE BLOCKING IS BASED ON 200 PSI PRESSURE AND 2500 PSI CONCRETE

NO.	REVISION DESCRIPTION	PREP'D BY	DATE	APPROVED
	PREPARED FOR STD. MANUAL	SCP	2/13/96	

VERTICAL CONCRETE BLOCKING

CITY OF BLAINE
DEPT. OF PUBLIC WORKS

SIZE	PREV. DWG NO.	PUBLIC WORKS DRAWING NUMBER	
A		6–1	
SCALE NO SCALE	SHEET OF		REV. NO.

THRUST BLOCK TABLE

MINIMUM BEARING AREA AGAINST UNDISTURBED SOIL

PIPE SIZE	(A) SQ. FT.	(B) SQ. FT.	(C) SQ. FT.	(D) SQ. FT.	(E) SQ. FT.	X (100 PSI)
4	3	1	1	1	1	NONE
6	4	4	2	1	1	NONE
8	7	6	4	2	1	3
10	11	10	6	3	2	4
12	16	14	9	5	3	5
14	22	19	12	6	3	7
16	29	25	16	8	4	10
18	36	31	20	10	5	13
20	45	39	24	13	6	16
22	54	47	29	15	8	23
24	64	56	35	18	9	
28	87	76	48	24	12	
30	101	87	55	28	14	
36	145	125	78	40	20	

SAFE BEARING LOADS IN LB./SO. FT.
THE SAFE BEARING LOADS GIVEN IN THE FOLLOWING TABLE ARE FOR HORIZONTAL THRUSTS WHEN THE DEPTH OF COVER OVER THE PIPE EXCEEDS 2 FEET.

SOIL	SAFE BEARING LOAD LB. PER SQ. FT.
*MUCK, PEAT, ETC.	0
SOFT CLAY	1000
SAND	2000
SAND & GRAVEL	3000
SAND & GRAVEL CEMENTED W/ CLAY	4000
HARD SHALE	10000

*IN MUCK OR PEAT, ALL THRUSTS SHALL BE RESTRAINED BY PILES OR TIE RODS TO SOLID FOUNDATIONS OR BY REMOVAL OF MUCK OR PEAT AND REPLACEMENT WITH BALLAST OF SUFFICIENT STABILITY.

NOTES

1. BEARING AREA OF CONCRETE THRUST BLOCK IS BASED ON 200 PSI PRESSURE AND SOIL BEARING LOAD OF 2000 PSF.
2. AREAS MUST BE ADJUSTED FOR OTHER PIPE SIZES, PRESSURES AND SOIL CONDITIONS.
3. CONCRETE BLOCKING SHALL BE CAST IN PLACE AND HAVE A MINIMUM OF 1/4 SQUARE FOOT BEARING AGAINST THE FITTING.
4. THE BLOCK SHALL BEAR AGAINGST THE FITTING ONLY AND SHALL BE CLEAR OF JOINTS TO PERMIT TAKING UP OR DISMANTILING OF FITTING.
5. THE CONTRACTOR SHALL INSTALL LOCKING DEVICES ADEQUATE TO WITHSTAND FULL TEST PRESSURE AS WELL AS TO CONTINUOUSLY WITHSTAND OPERATION PRESSURE UNDER ALL CONDITIONS OF SERVICE.

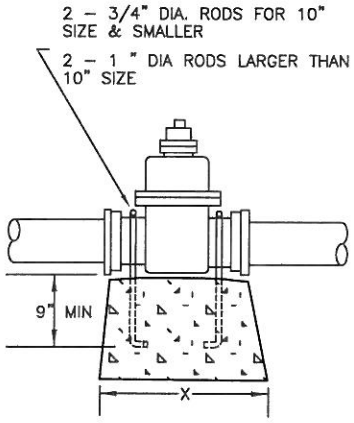

NOTE: ADDITIONAL BLOCKING MUST BE PROVIDED IF GATE VALVE IS AT END OF LINE DURING TESTING.

GATE VALVE

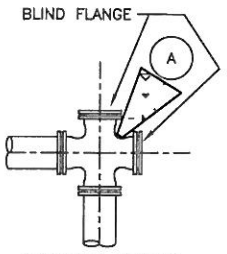

CAPPED CROSS

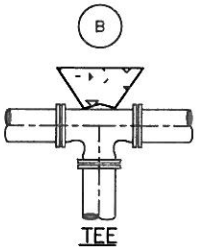

TEE

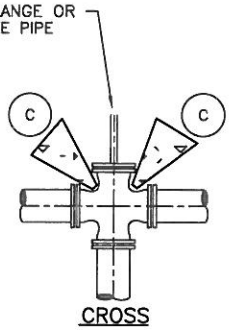

CROSS

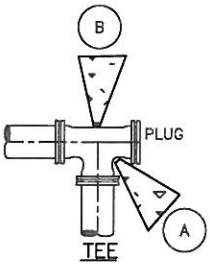

TEE

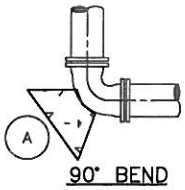

90° BEND

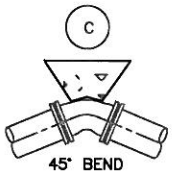

45° BEND

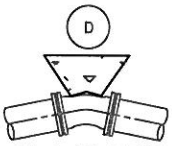

22 1/2° BEND

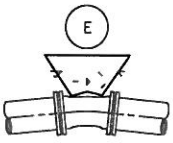

11 1/4° BEND

DWG#: 6–2 TIME: 02–13–96 10:01 AM					
	PREPARED FOR STD. MANUAL		SCP	2/13/96	
NO.	REVISION DESCRIPTION		PREP'D BY	DATE	APPROVED

HORIZONTAL THRUST BLOCKING

CITY OF BLAINE
DEPT. OF PUBLIC WORKS

SIZE	PREV. DWG NO.	PUBLIC WORKS DRAWING NUMBER	
A		6–2	
SCALE NONE	SHEET OF		REV. NO.

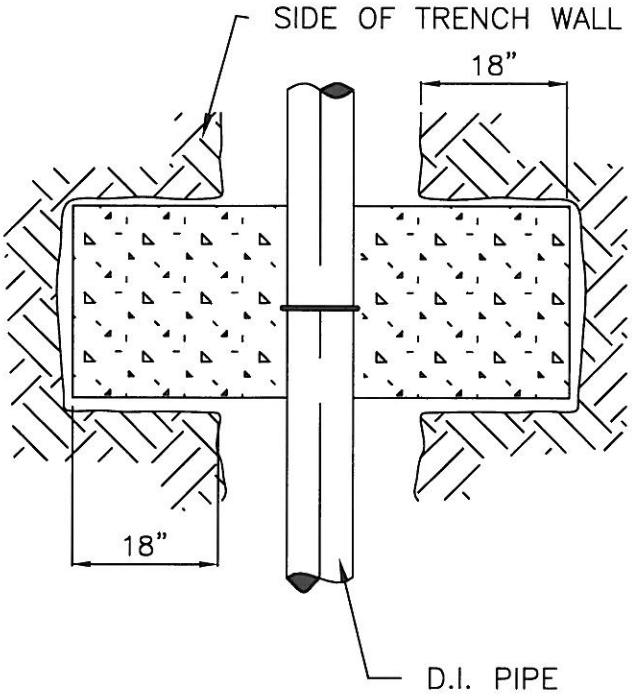

PIPE SIZE	DIMENSIONS (INCHES) A	B	C	D	E
4"	2.4	4.8	17	13	14.6
6"	3.5	6.9	18	14	14.5
8"	4.5	9.1	19	15	14.5
10"	5.6	11.1	20	16	14.4
12"	6.6	13.2	21	17	14.4
14"	7.7	15.3	22	18	14.3
16"	8.7	17.4	23	19	14.3
18"	9.8	19.5	24	20	14.2

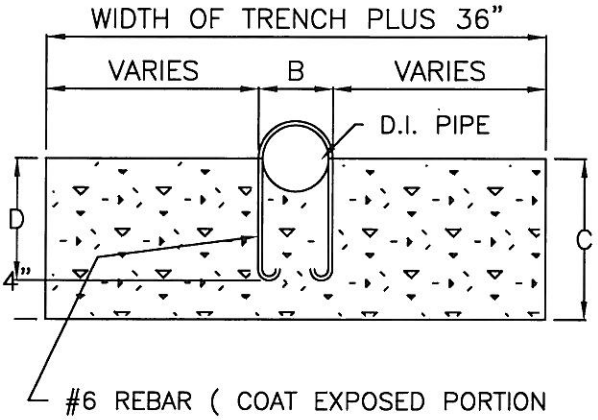

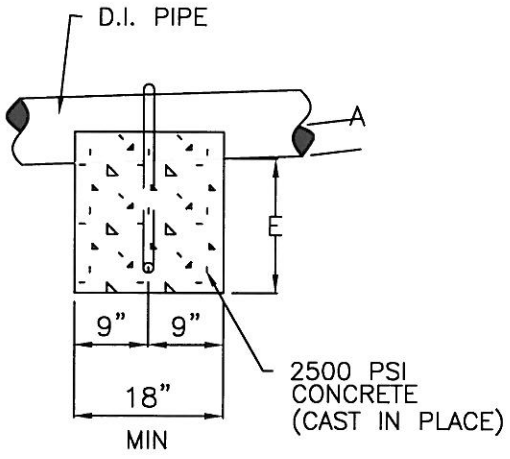

NOTES:
SLOPES > 20% – PROVIDE CONCRETE SLOPE ANCHORS (20' TO 25' ON CENTERS)

DWG#: 6-3 TIME: 02-13-96 10:02 AM					
	PREPARED FOR STD. MANUAL	SCP	2/13/96		
NO.	REVISION DESCRIPTION	PREP'D BY	DATE	APPROVED	

CONCRETE SLOPE ANCHOR

CITY OF BLAINE
DEPT. OF PUBLIC WORKS

SIZE	PREV. DWG NO.	PUBLIC WORKS DRAWING NUMBER	
A		6-3	
SCALE: NONE		SHEET OF	REV. NO.

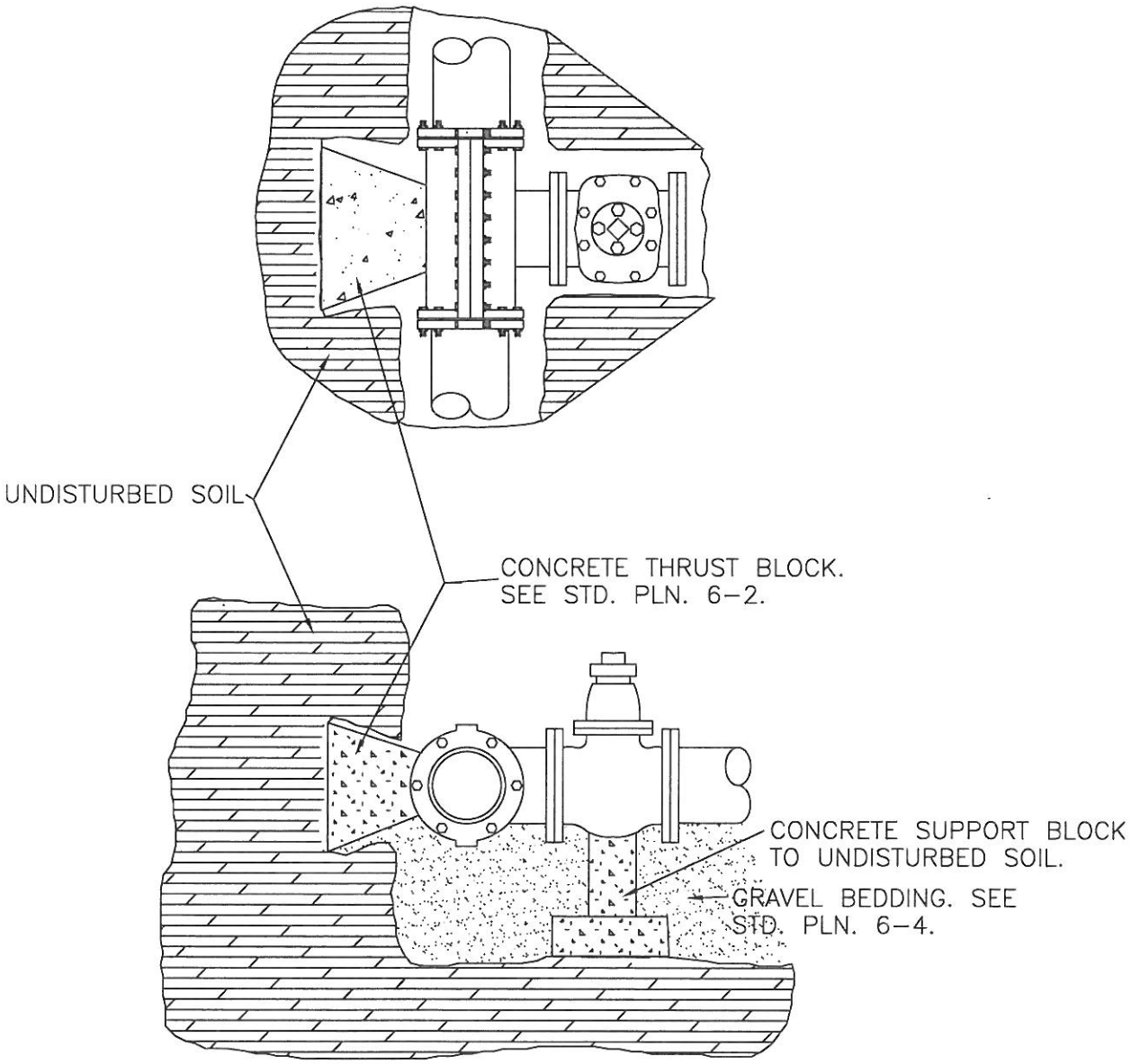

CAST IRON TAPPING TEE
MECHANICAL JOINT SLEEVE

INSTALLED ON ASBESTOS CEMENT PIPE
CAST IRON PIPE AND DUCTILE IRON PIPE

DWG#: 6-5	TIME: 02-13-96 9:50 AM			
	PREPARED FOR STD. MANUAL	SCP	2/13/96	
NO.	REVISION DESCRIPTION	PREP'D BY	DATE	APPROVED

TAPPING TEES

CITY OF BLAINE
DEPT. OF PUBLIC WORKS

SIZE	PREV. DWG NO.	PUBLIC WORKS DRAWING NUMBER	
A		6-5	
SCALE NO SCALE		SHEET OF	REV. NO.

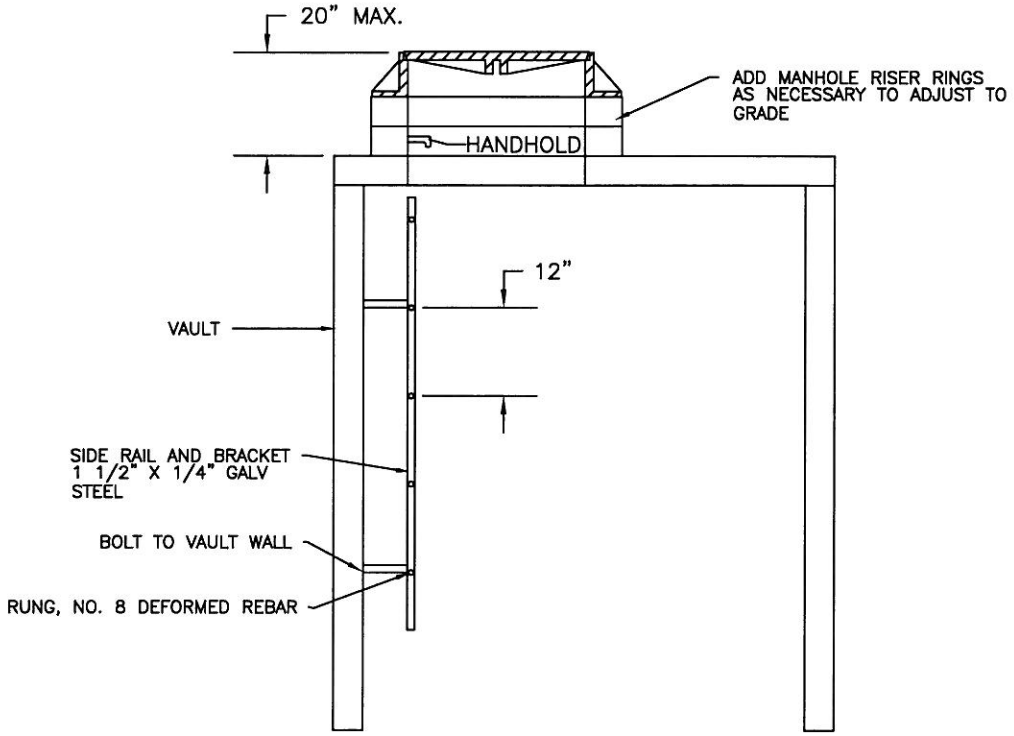

NOTES:
-LADDER IS TO BE SECURED TO VAULT WALL AS REQUIRED.
-ALL LADDER PARTS ARE TO BE GALVANIZED, CONFORMING TO ASTM A 123

NO.	REVISION DESCRIPTION	PREP'D BY	DATE	APPROVED
	PREPARED FOR STD. MANUAL	SCP	2/13/96	

PRV/METER VAULT
ACCESS LADDER
LADDER

CITY OF BLAINE
DEPT. OF PUBLIC WORKS

SIZE	PREV. DWG NO.	PUBLIC WORKS DRAWING NUMBER	
A		6-7	
SCALE NO SCALE		SHEET OF	REV. NO.

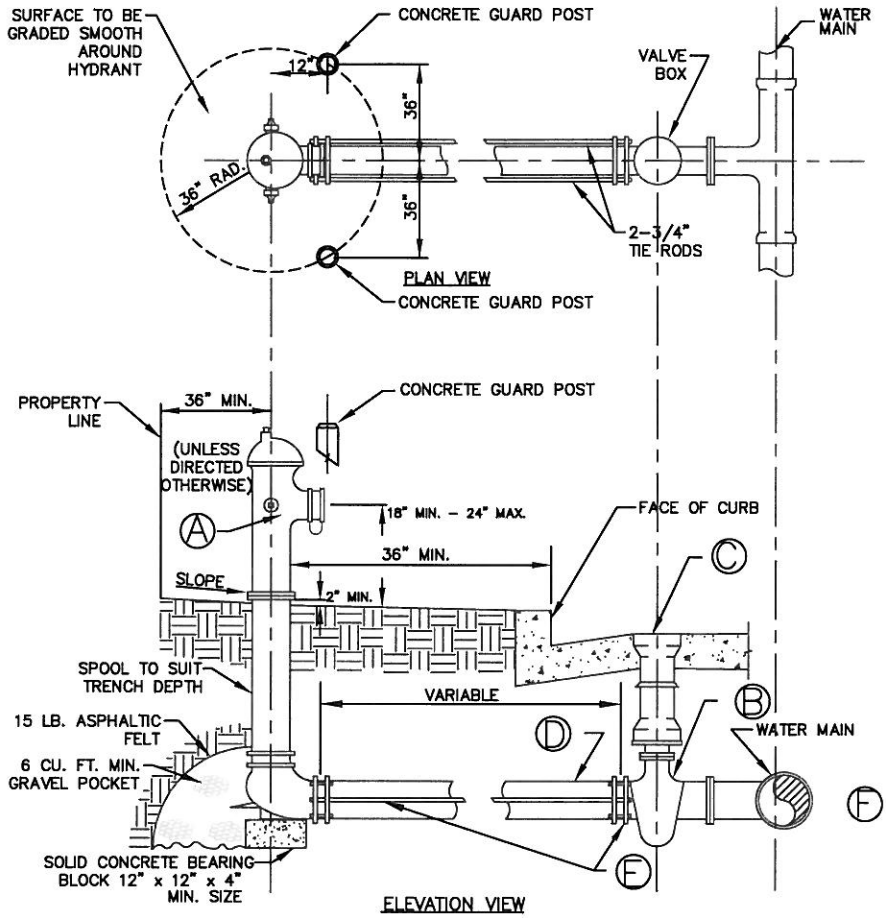

LEGEND:

A. MAIN VALVE OPENING OF THE HYDRANT SHALL BE A MINIMUM OF (5-1/4") FIVE AND ONE-QUARTER INCH DIAMETER. ONE (4- 1/2") FOUR AND ONE-HALF INCH PUMPER PORT:

MAIN PORT SHALL INCLUDE ONE FIVE INCH STORZ METALFACE ADAPTER AND ONE FIVE INCH STORZ ALUMINUM CAP.
ADAPTER REQUIREMENTS ARE AS FOLLOWS:
1. OVERALL DIAMETER NOT TO EXCEED 7-3/8".
2. OVERALL LENGTH NOT TO EXCEED 4-1/4".
3. TO BE SUPPLIED WITH (2) 14-20 HOLES DRILLED AND TAPPED, 180° APART THRU FEMALE THREAD, TO LOCK ADAPTER TO HYDRANT.
4. 1/8" VINYL AIRCRAFT CABLE, 18" MINIMUM LENGTH TO BE ATTACHED TO CAP AND ADAPTER.

TWO (2) TWO AND ONE-HALF INCH (2-1/2") HOSE PORTS WILL BE PROVIDED. ALL SHALL BE N.S.T. THREADS.

B. 1 6", OR 8", GATE VALVE, AWWA C-500, RESILIENT SEAT, WEDGE GATE VALVE "O" RING STEM SEAL, MJ X FLG WITH LUGS, DEPENDENT UPON NOTE "D" SPEC'S.

C. 1 TWO PIECE CAST IRON VALVE BOX SIMILAR TO RICH MANUFACTURING TYPE 940 OR 5" C.I. SOILS PIPE VALVE BOX EXTENSION

D. 6" DUCTILE IRON PIPE, CLASS 50, UNDER 50' IN LENGTH.
8" DUCTILE IRON PIPE, CLASS 50, OVER 50' IN LENGTH.

E. 2- 3/4" STEEL SHACKLE RODS, (COATED WITH COLD TAR EPOXY AFTER INSTALLATION) OR PACIFIC WATER WORKS HOLDING SPOOL, OR MEGA LUGS.

F. FULL BODY TAPPING SLEEVE, C.I. OR D.I., OR HYDRANT TEE (F X MJ)

G. HYDRANT COLOR SHALL FOLLOW THE NATIONAL FIRE CODE CLASSIFICATION RATING.

CLASS AA - LIGHT BLUE	1500 GPM OR GREATER
CLASS A - GREEN	1000-1499 GPM
CLASS B - ORANGE	500-999 GPM
CLASS C - RED	500 GPM OR LESS

EACH HYDRANT SHALL HAVE A WHITE BARREL. THE CAPS AND TOP WILL BE PAINTED ACCORDING TO NFC CODE.

NOTES:

1. TOP GUARD POST TO BE LEVEL WITH TOP OF HYDRANT.
2. GUARD POST INSTALLED ONLY WHEN DIRECTED.
3. FIRE HYDRANTS
   - Conform to AWWA C502 except as herein modified.
   - Standard barrel of the hydrants shall be a minimum of (7-1/4") seven and one-quarter inches minimum.
   - Provide pentagon operating nuts.
   - Open by turning counterclockwise.
   - Nozzles and operating nuts shall be identical with the owner's existing equipment or as elsewhere provided.
   - Depth of clear cover over the pipe shall be three feet (3) unless larger depth or cover is required where the hydrant is installed.
   - Provide a sidewalk flange and safety stem coupling which will allow hydrant barrel to separate with minimum damage.
   - Hydrant barrel extension standard of manufacturer of hydrant provided.
   - Hydrant shall be as:
     -Waterous Pacer 100 Model WB-67.
     -Clow Model F 2505.
     -Meuller Centurion Model A-421.
   - Hydrant to remain tagged or bagged until accepted by City.
4. BLUE REFLECTOR OFFSET 6" FROM CENTERLINE OF STREET TO HYDRANT SIDE.

DWG#: 6-8	TIME: 02-20-97 3:18 PM			
	REVISED	SCP	2/20/97	
	PREPAIRED FOR STD. MANUAL	SCP	2/13/96	
NO.	REVISION DESCRIPTION	PREP'D BY	DATE	APPROVED

TYPE A FIRE HYDRANT ASSEMBLY

CITY OF BLAINE
DEPT. OF PUBLIC WORKS

SIZE	PREV. DWG NO.	PUBLIC WORKS DRAWING NUMBER	
A		6-8	
SCALE NONE		SHEET OF	REV. NO.

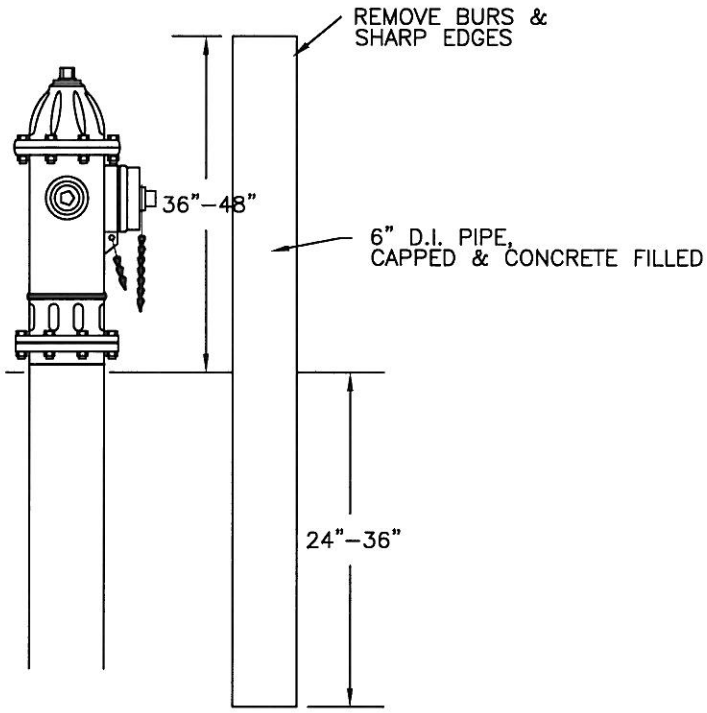

ELEVATION

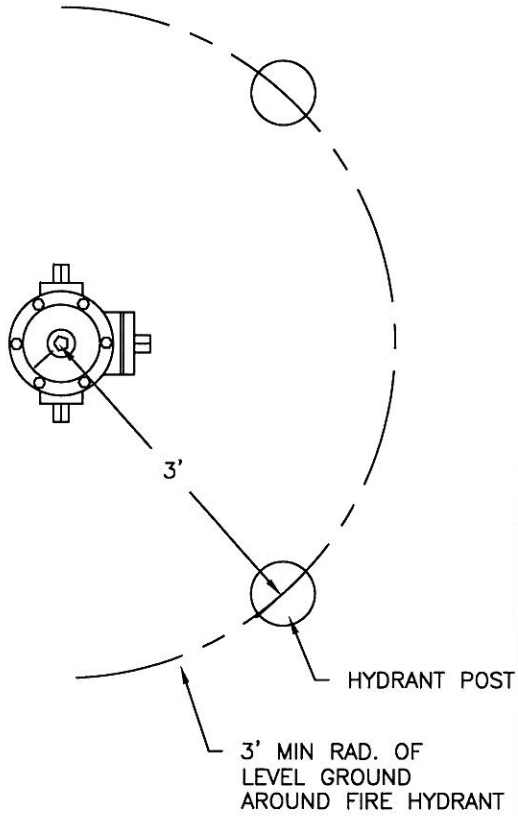

PLAN

FIRE HYDRANT GUARD POST

VALVE MARKER POST

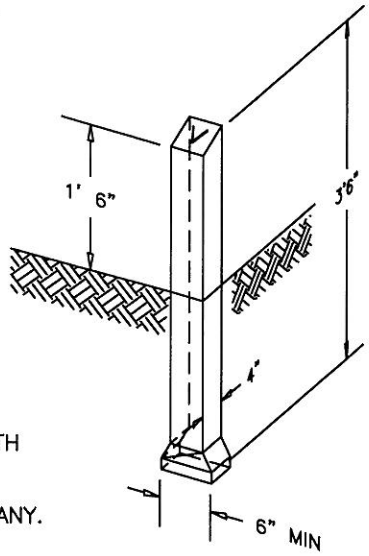

NOTES:

GUARD POSTS SHALL BE 6" D.I., CLASS 50 PIPE, 6' LONG, FILLED WITH CONCRETE. PAINT PER WATER UTILITY REQUIREMENTS.

VALVE MARKER POST SHALL BE EQUAL TO FOG TITE METER SEAL COMPANY. PAINT PER WATER UTILITY REQUIREMENTS.

VALVE MARKER POST TO BE USED FOR ALL MAINLINE VALVES OUTSIDE PAVED AREAS.

COLOR CODING: WATER VALVES – YELLOW
AIR VALVES – GREEN
BLOW OFF VALVES – RED

NO.	REVISION DESCRIPTION	PREP'D BY	DATE	APPROVED
	PREPARED FOR STD. MANUAL	SCP	2/13/96	

FIRE HYDRANT GUARD POST & VALVE MARKER POST

CITY OF BLAINE
DEPT. OF PUBLIC WORKS

SIZE	PREV. DWG NO.	PUBLIC WORKS DRAWING NUMBER	
A		6–9	
SCALE NONE		SHEET OF	REV. NO.

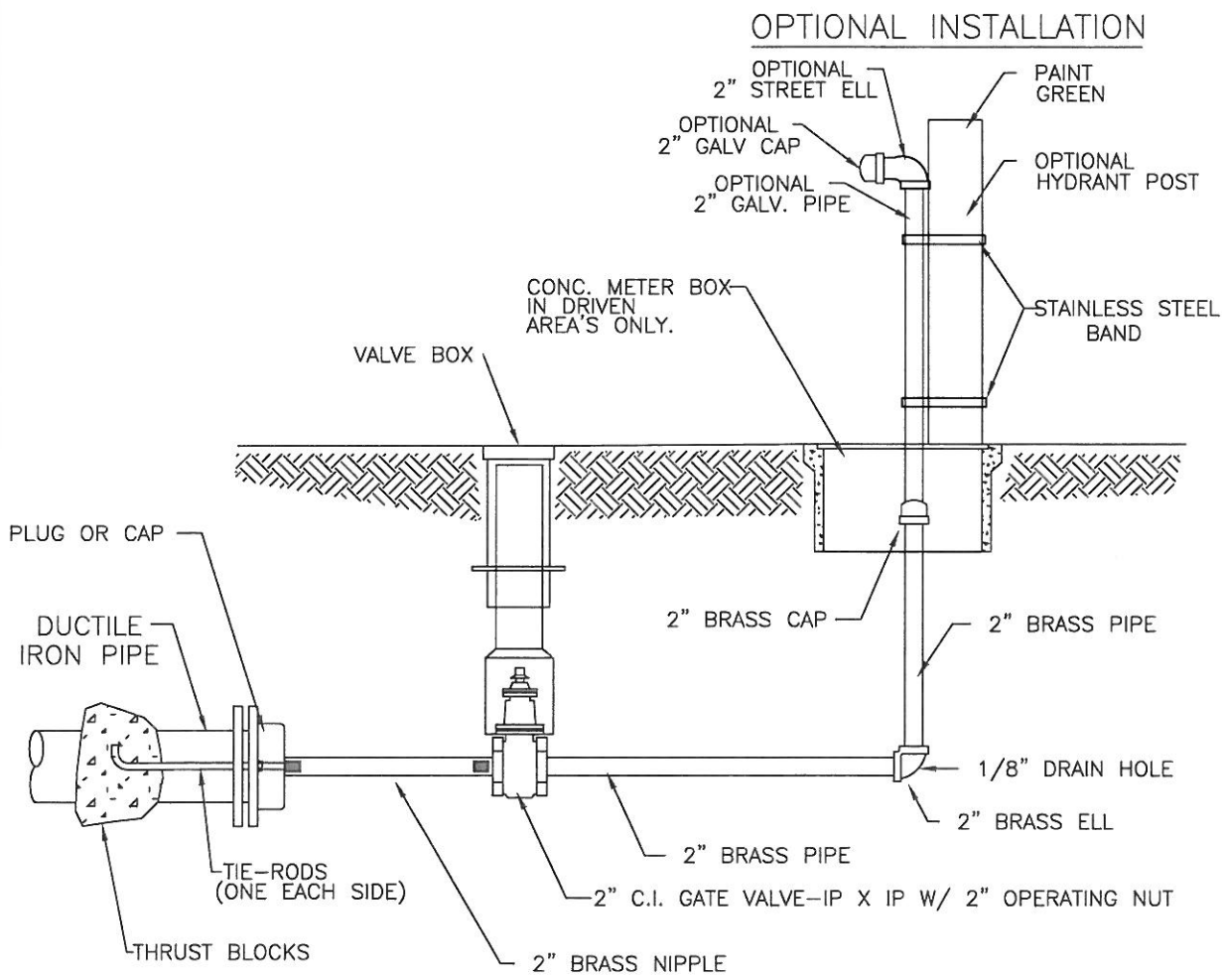

NOTE
PLACE CONCRETE VALVE MARKER NEAR METER BOX

NO.	REVISION DESCRIPTION	PREP'D BY	DATE	APPROVED
	REVISED	SCP	2/20/97	
	PREPARED FOR STD. MANUAL	SCP	2/13/96	

STANDARD BLOW-OFF ASSEMBLY

CITY OF BLAINE
DEPT. OF PUBLIC WORKS

SIZE	PREV. DWG NO.	PUBLIC WORKS DRAWING NUMBER	
A		6-10	
SCALE NONE	SHEET OF		REV. NO.

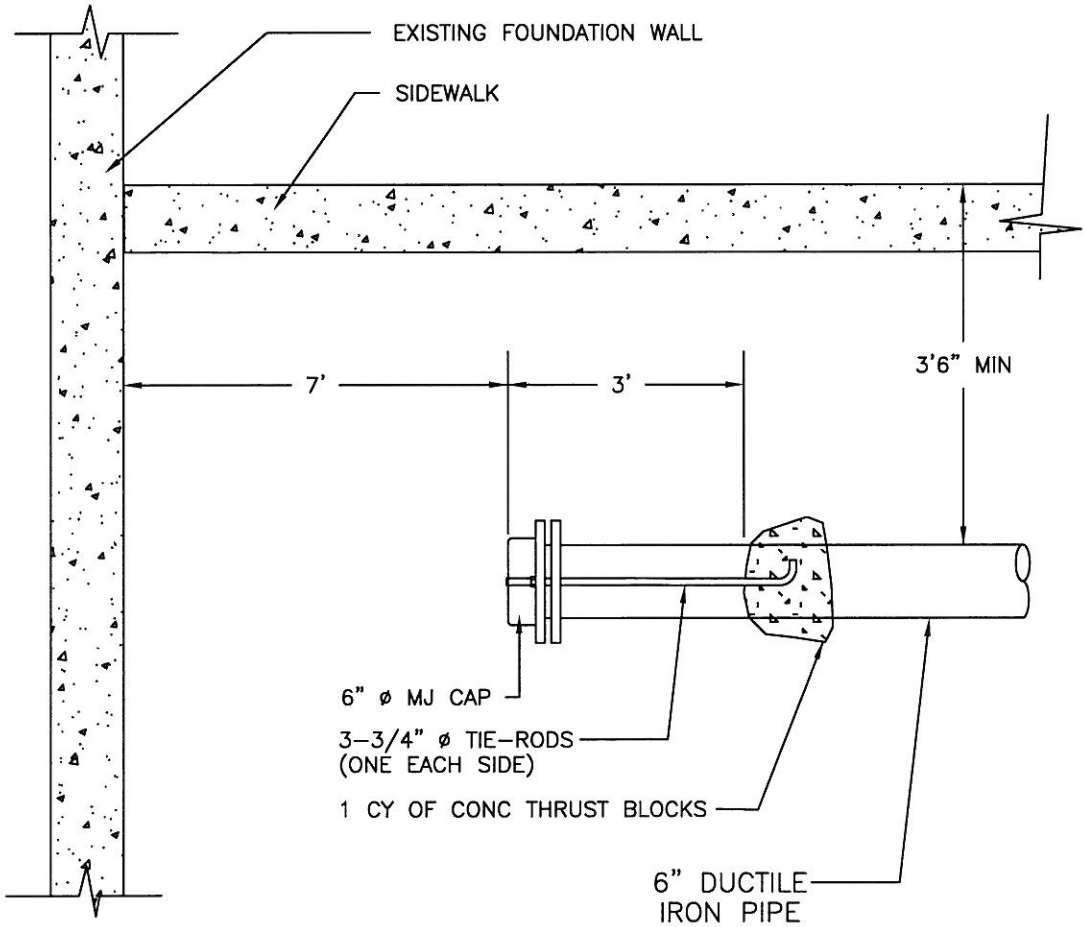

6" DIAMETER FIRE SERVICE

(FOR FUTURE USE)

NO.	REVISION DESCRIPTION	PREP'D BY	DATE	APPROVED
	PREPARED FOR STD. MANUAL	SCP	2/13/96	

6" DIAMETER FIRE SERVICE (FOR FUTURE USE)

CITY OF BLAINE
DEPT. OF PUBLIC WORKS

SIZE	PREV. DWG NO.	PUBLIC WORKS DRAWING NUMBER	
A		6-10A	
SCALE NONE		SHEET OF	REV. NO.

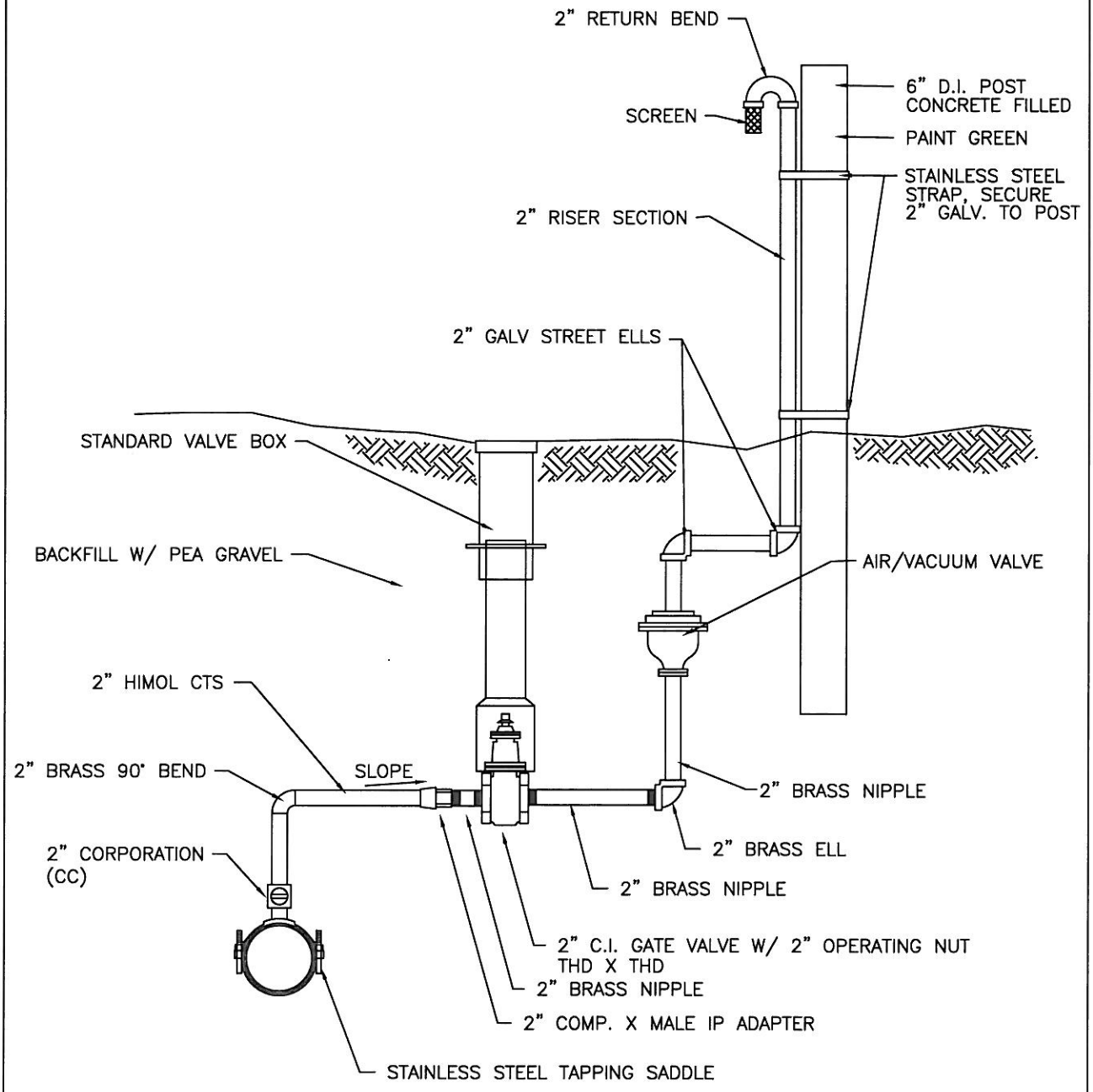

NOTE
1. USE APPROVED JOINT COMPOUND ON ALL THREADED CONNECTIONS.
2. RELOCATE RISER SECTION OUT OF DRIVING SURFACE WITH D.I. POST

NO.	REVISION DESCRIPTION	PREP'D BY	DATE	APPROVED
	PREPARED FOR STD. MANUAL	SCP	2/13/96	

2" AIR & VACUUM RELEASE VALVE ASSEMBLY

CITY OF BLAINE
DEPT. OF PUBLIC WORKS

SIZE	PREV. DWG NO.	PUBLIC WORKS DRAWING NUMBER	
A		6-11	
SCALE: NONE		SHEET OF	REV. NO.

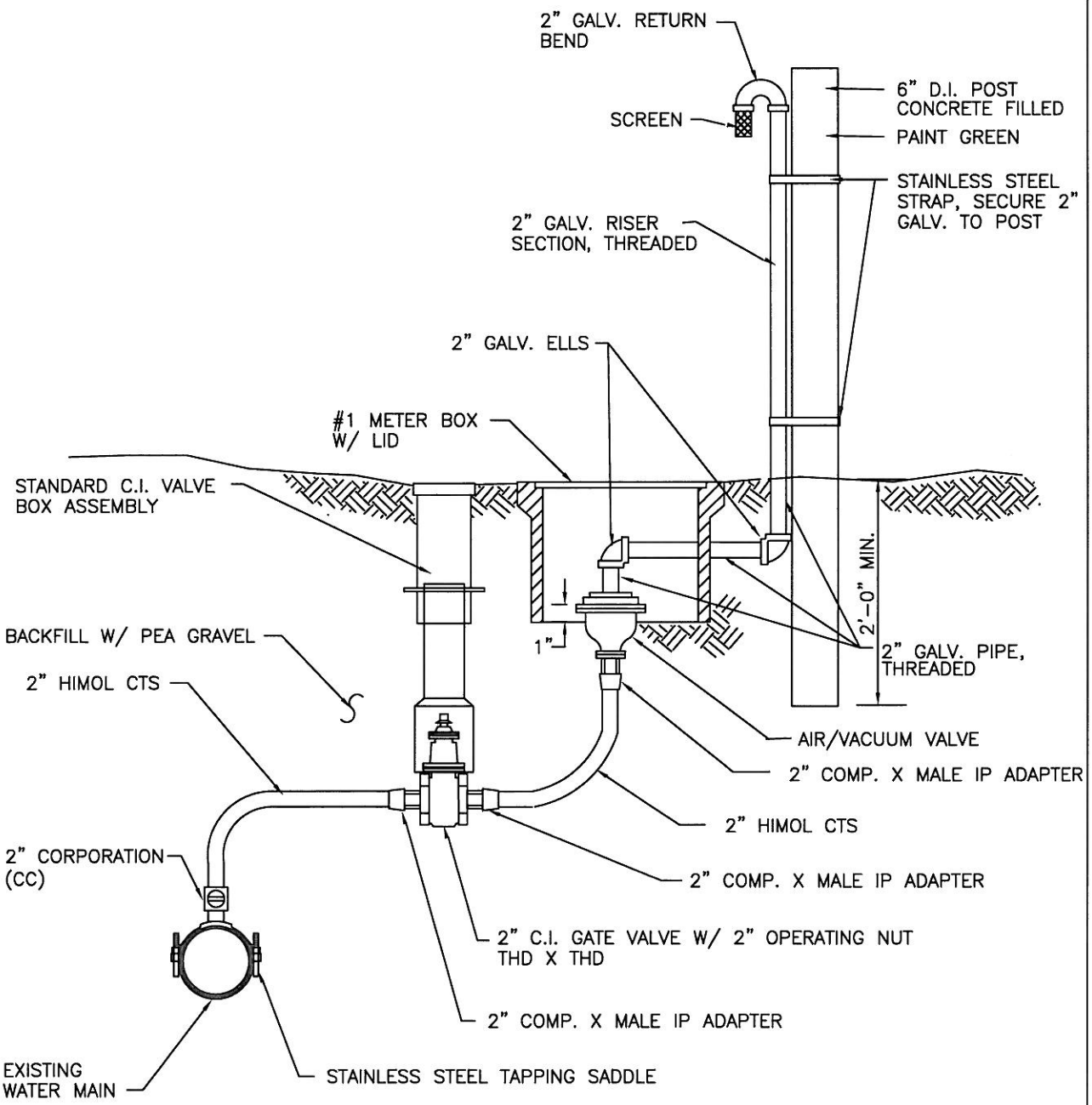

NOTE

1. USE APPROVED JOINT COMPOUND ON ALL THREADED CONNECTIONS.
2. PAINT CONCRETE POST – GREEN (PER UTILITY STD. SPECIFICATIONS)
3. AIR/VAC TO BE BURIED AS SHOWN FOR FREEZE PROTECTION.
4. LOCATION OF RISER SECTION TO BE APPROVED BY ENGINEER PRIOR TO INSTALLATION, AWAY FROM DRIVING SURFACE, ATTACHED TO D.I. POST (CONCRETE FILLED).
5. TAP INTO WATER MAIN BY CITY UTILITY CREW.

NO.	REVISION DESCRIPTION	PREP'D BY	DATE	APPROVED
	PREPARED FOR STD. MANUAL	SCP	2/13/96	

2" AIR & VACUUM RELEASE VALVE ASSEM. (12" MAIN OR LGR.)

CITY OF BLAINE
DEPT. OF PUBLIC WORKS

SIZE	PREV. DWG NO.	PUBLIC WORKS DRAWING NUMBER	
A		6-11A	
SCALE: NONE		SHEET OF	REV. NO.

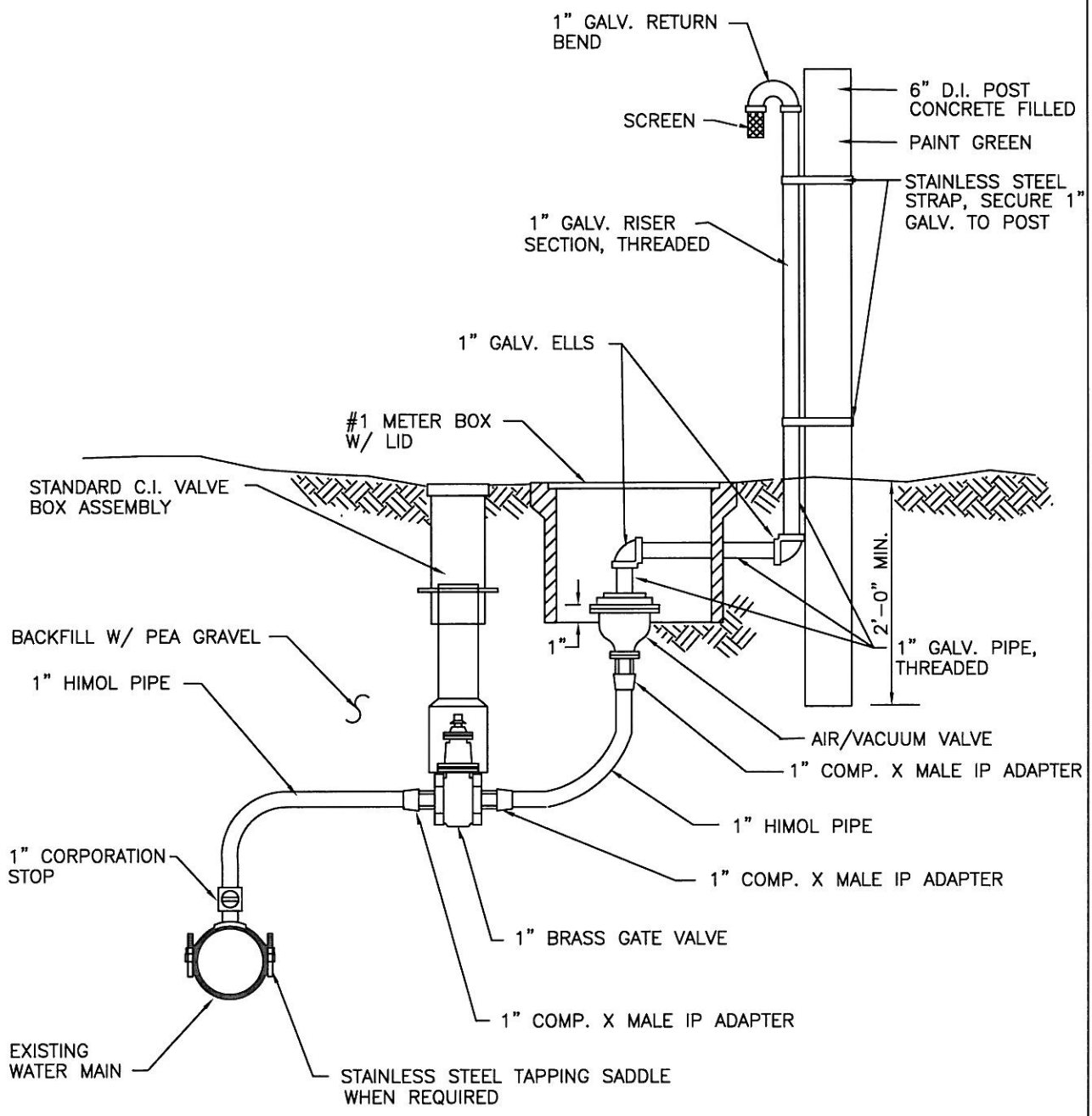

NOTE

1. USE APPROVED JOINT COMPOUND ON ALL THREADED CONNECTIONS.
2. PAINT CONCRETE POST – GREEN (PER UTILITY STD. SPECIFICATIONS)
3. AIR/VAC TO BE BURIED AS SHOWN FOR FREEZE PROTECTION.
4. LOCATION OF RISER SECTION TO BE APPROVED BY ENGINEER PRIOR TO INSTALLATION, AWAY FROM DRIVING SURFACE, ATTACHED TO D.I. POST (CONCRETE FILLED).
5. TAP INTO WATER MAIN BY CITY UTILITY CREW.

NO.	REVISION DESCRIPTION	PREP'D BY	DATE	APPROVED
	PREPARED FOR STD. MANUAL	SCP	2/13/96	

1" AIR & VACUUM RELEASE VALVE ASSEM. (10" MAIN & SMALLER)

CITY OF BLAINE
DEPT. OF PUBLIC WORKS

SIZE	PREV. DWG NO.	PUBLIC WORKS DRAWING NUMBER	
A		6-11B	
SCALE NONE	SHEET OF		REV. NO.

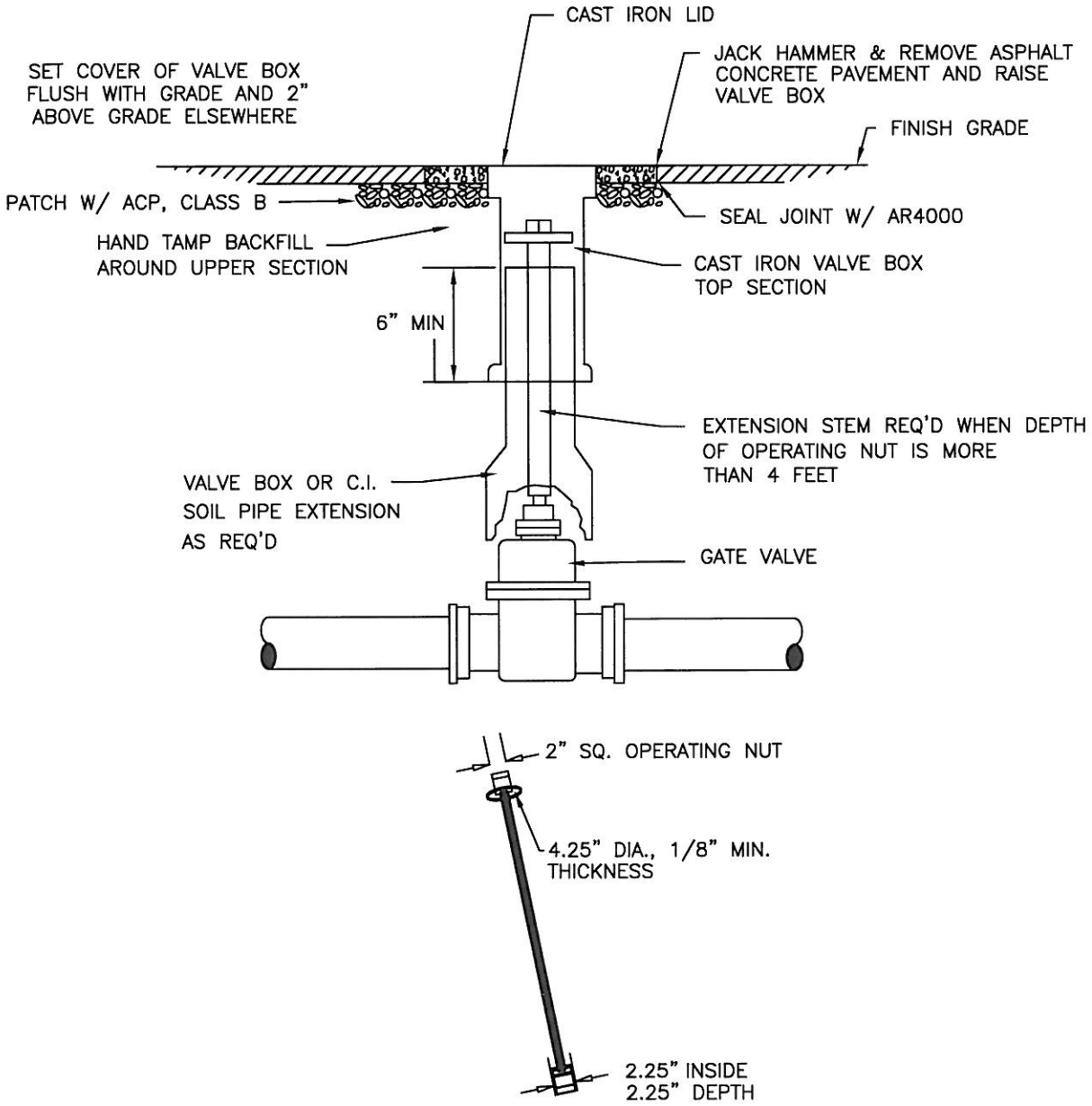

VALVE OPERATING NUT EXTENSION

EXTENSIONS ARE REQUIRED WHEN THE VALVE NUT IS MORE THAN THREE (3) FEET BELOW FINISHED GRADE. EXTENSIONS ARE TO BE A MINIMUM OF ONE (1) FOOT LONG. ONLY ONE EXTENSION TO BE USED PER VALVE.
VALVE BOX EXTENSIONS SHALL BE 5" C.I. SOILS PIPE–TYLER TY SEAL

NOTES:

1. ALL EXTENSIONS ARE TO BE MADE OF STEEL, SIZED AS NOTED, AND PAINTED WITH 2 COATS OF RUST INHIBITIVE METAL PAINT.
2. RAISE THE VALVE BOX TO TOP OF CRUSHED ROCK GRADE PRIOR TO PAVING, AND TO FINISH GRADE AFTER ASPHALT CONCRETE WORK IS COMPLETED BUT IN NO CASE LATER THAN 48 HOURS AFTER PAVING.
3. SEAL EDGES OF ASPHALT CONCRETE PATCH WITH JOINT SEALER.

NO.	REVISION DESCRIPTION	PREP'D BY	DATE	APPROVED
	PREPARED FOR STD. MANUAL	SCP	2/14/96	

VALVE OPERATING EXTENSION

CITY OF BLAINE
DEPT. OF PUBLIC WORKS

SIZE	PREV. DWG NO.	PUBLIC WORKS DRAWING NUMBER	
A		6-12	
SCALE NONE	SHEET OF		REV. NO.

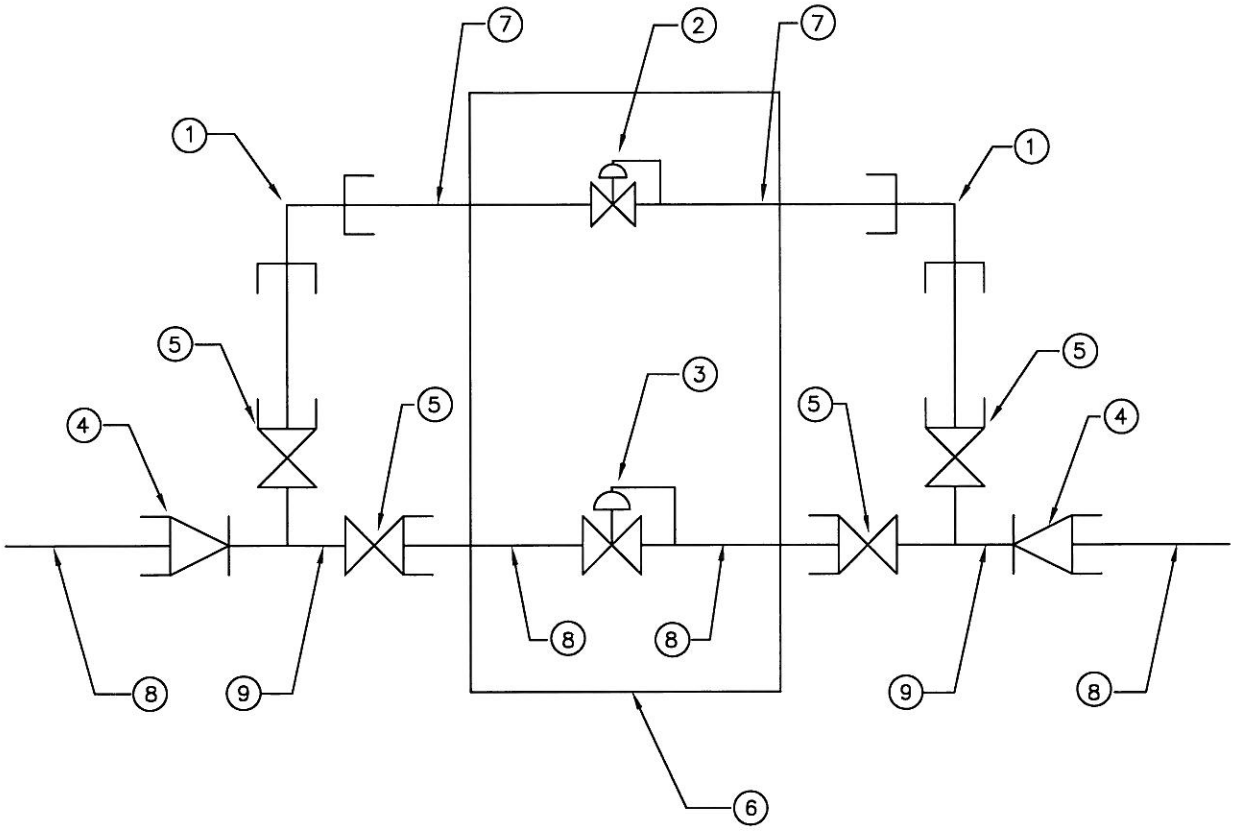

MATERIALS LIST

1. 90° Bend MJ
2. Bypass Pressure Reducing Valve
3. Mainline Pressure Reducing Valve
4. Mainline Reducer
5. Gate Valve, FL X MJ
6. Precast Concrete Vault, Sized as required
7. Bypass Piping, D.I., Sized as required
8. Mainline Piping, D.I., Sized as required
9. Tee, FL X FL

NO.	REVISION DESCRIPTION	PREP'D BY	DATE	APPROVED
	PREPARED FOR STD. MANUAL	SCP	2/14/96	

STANDARD PRESSURE REDUCING STATION

CITY OF BLAINE
DEPT. OF PUBLIC WORKS

SIZE	PREV. DWG NO.	PUBLIC WORKS DRAWING NUMBER	
A		6-13	
SCALE NONE	SHEET OF		REV. NO.

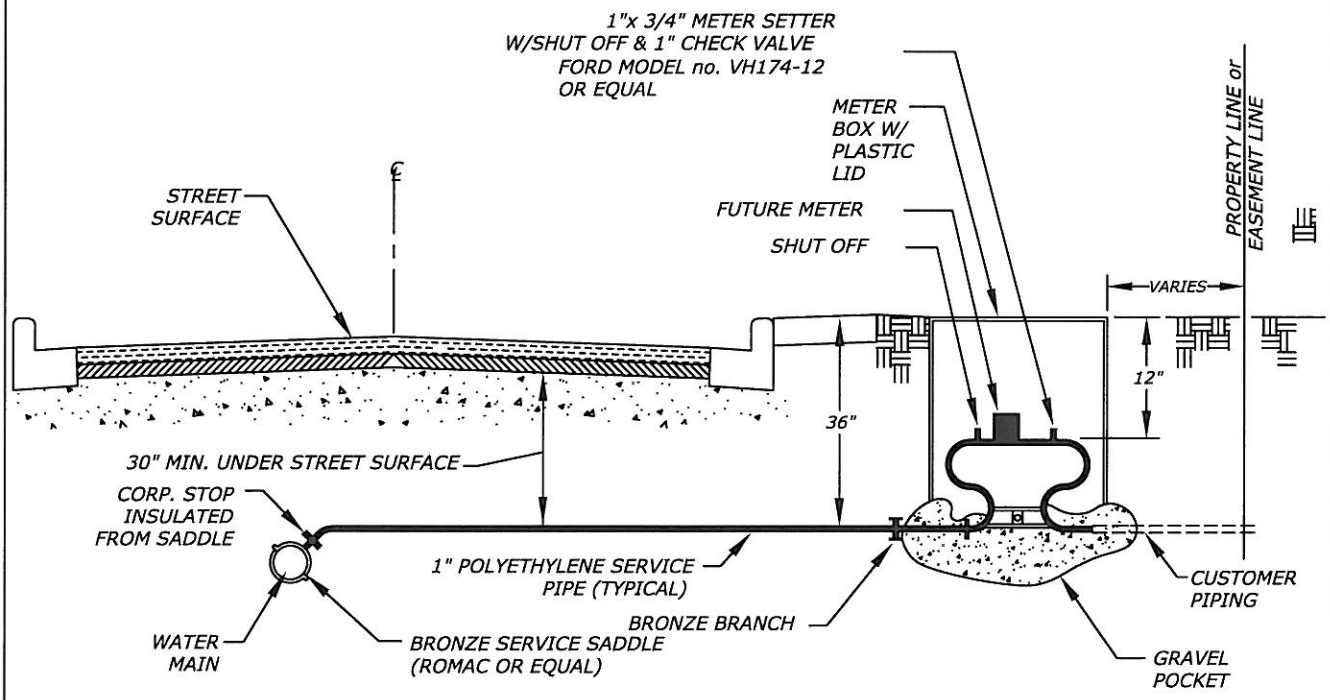

NO.	REVISION DESCRIPTION	PREP'D BY	DATE	APPROVED
2	REVISED	TMC	3/36/07	
1	REVISED	SCP	2/21/97	
0	PREPARED FOR STD MANUAL	SCP	2/14/96	

1" SERVICE CONNECTION DETAIL

CITY OF BLAINE
PUBLIC WORKS DEPARTMENT

SIZE	PREV. DWG NO.	PUBLIC WORKS DRAWING NUMBER	
A		6-14	
SCALE NONE		SHEET OF	REV. NO.

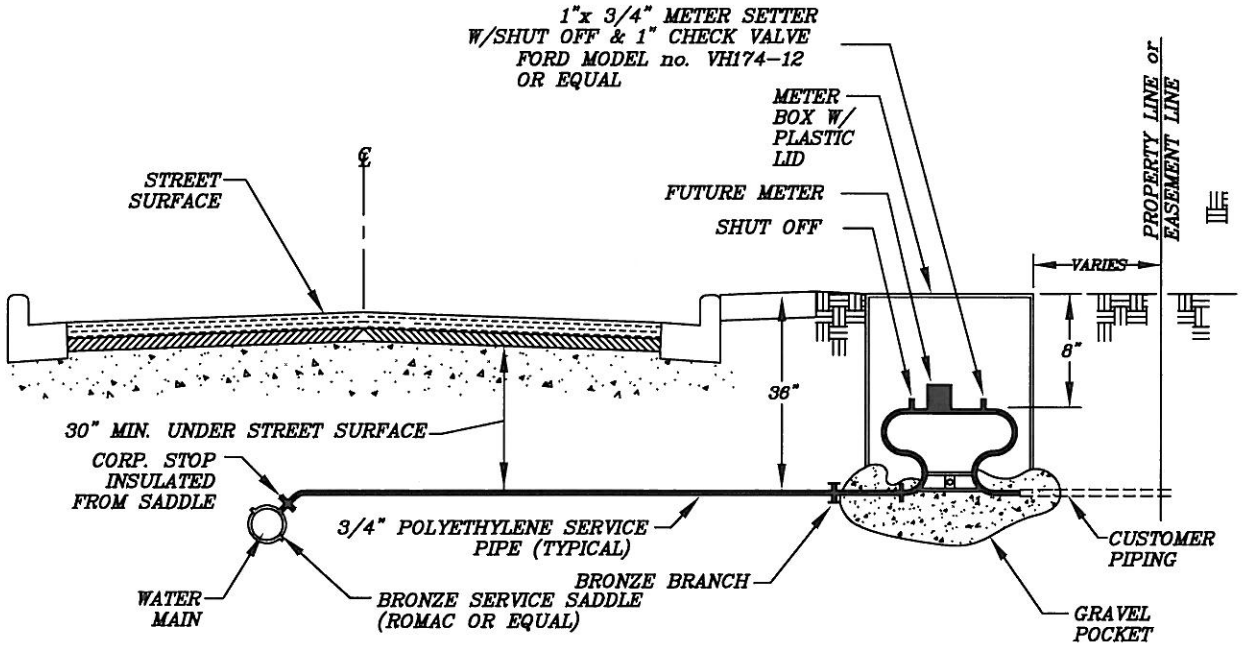

DWG#: 6-14	TIME: 02-21-97 8:12 AM			
	REVISED	SCP	2/21/97	
	PREPARED FOR STD. MANUAL	SCP	2/14/96	
NO.	REVISION DESCRIPTION	PREP'D BY	DATE	APPROVED

3/4" SERVICE CONNECTION DETAIL

CITY OF BLAINE
DEPT. OF PUBLIC WORKS

SIZE	PREV. DWG NO.	PUBLIC WORKS DRAWING NUMBER	
A		6-14A	
SCALE NONE		SHEET OF	REV. NO.

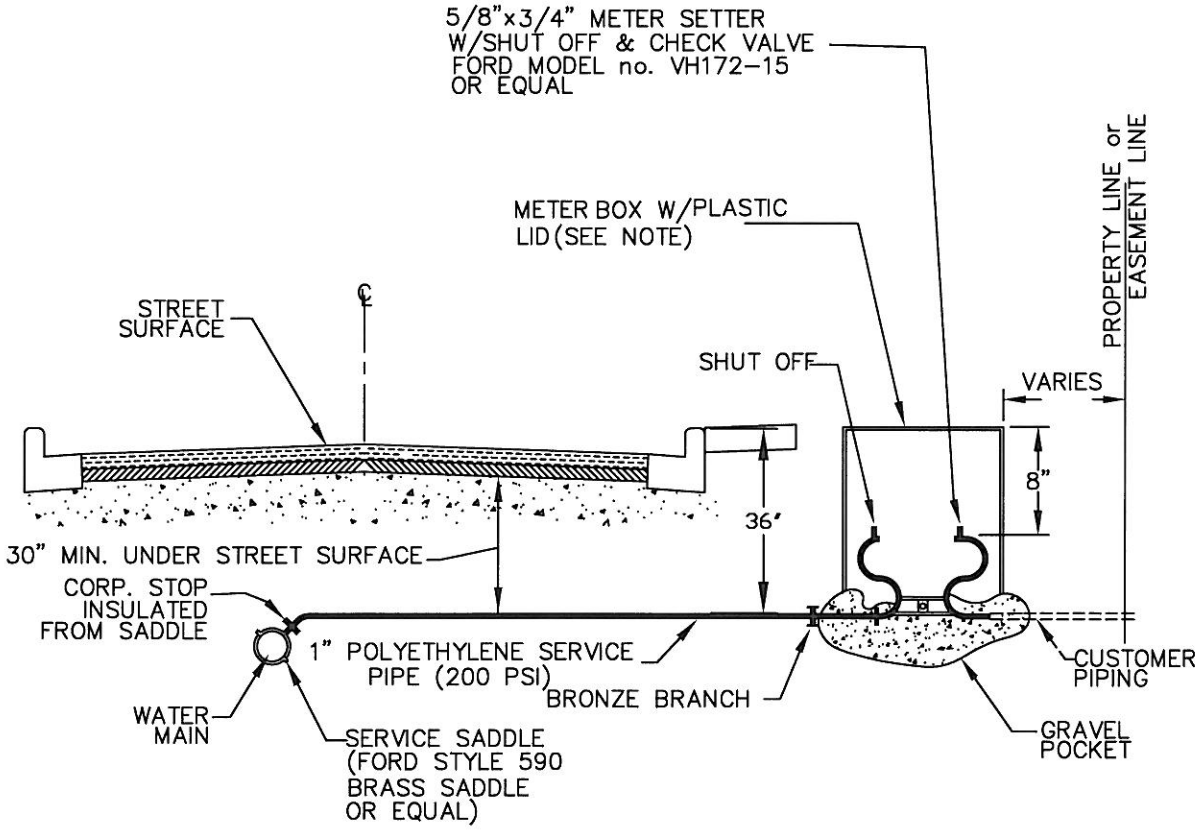

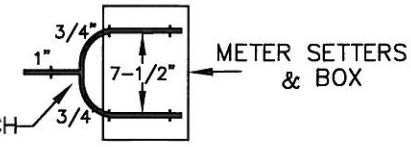

PLAN VIEW

NOTE:
CARSON INDUSTRIES INC.
MODEL 1324-12B WITH BOLT DOWN COVER
or EQUAL

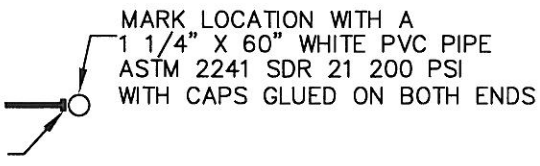

TEE OPTION

DWG#: 6-15	TIME: 02-14-96 8:05 AM			
	Tee Option Added	wrs	2/06/04	
	PREPARED FOR STD. MANUAL	SCP	2/14/96	
NO.	REVISION DESCRIPTION	PREP'D BY	DATE	APPROVED

DUAL SERVICE CONNECTION DETAIL

CITY OF BLAINE
DEPT. OF PUBLIC WORKS

SIZE	PREV. DWG NO.	PUBLIC WORKS DRAWING NUMBER
A		6-15
SCALE NONE	SHEET OF	REV. NO.

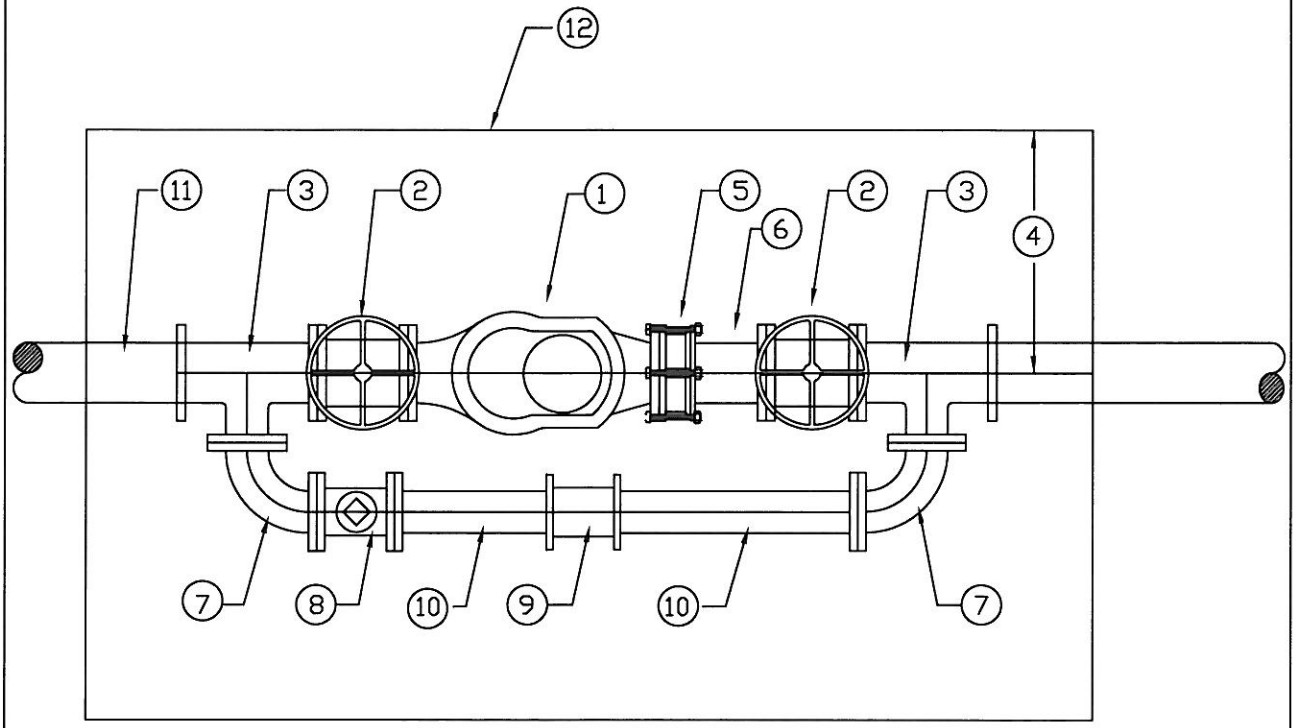

GENERAL NOTES

1. COMPOUND METERS
2. GATE VALVE, FL X FL
3. TEE
4. CENTER INSTALLATION IN VAULT
5. FLANGE X MJ ADAPTER
6. FLANGE X PLAIN END ADAPTER OR SPOOL
7. 90° BEND (FOR BYPASS)
8. BYPASS GATE VALVE
9. COUPLING
10. BYPASS PIPING
11. MAINLINE PIPING
12. CONCRETE VAULT, SIZED TO FIT
13. INSTALL MH FRAME AND LID, CENTER OVER METER. (SEE STD. B–606)
14. INSTALLATION IS BY CITY OF BLAINE FORCES

NO.	REVISION DESCRIPTION	PREP'D BY	DATE	APPROVED
	PREPARED FOR STD. MANUAL	SCP	2/9/96	

COMPOUND WATER METER INST; 3" TO 10" W/OPTIONAL BYPASS

CITY OF BLAINE
DEPT. OF PUBLIC WORKS

SIZE	PREV. SVG NO.	PUBLIC WORKS DRAWING NUMBER	
A		6–19	
SCALE NONE		SHEET OF	REV. NO.

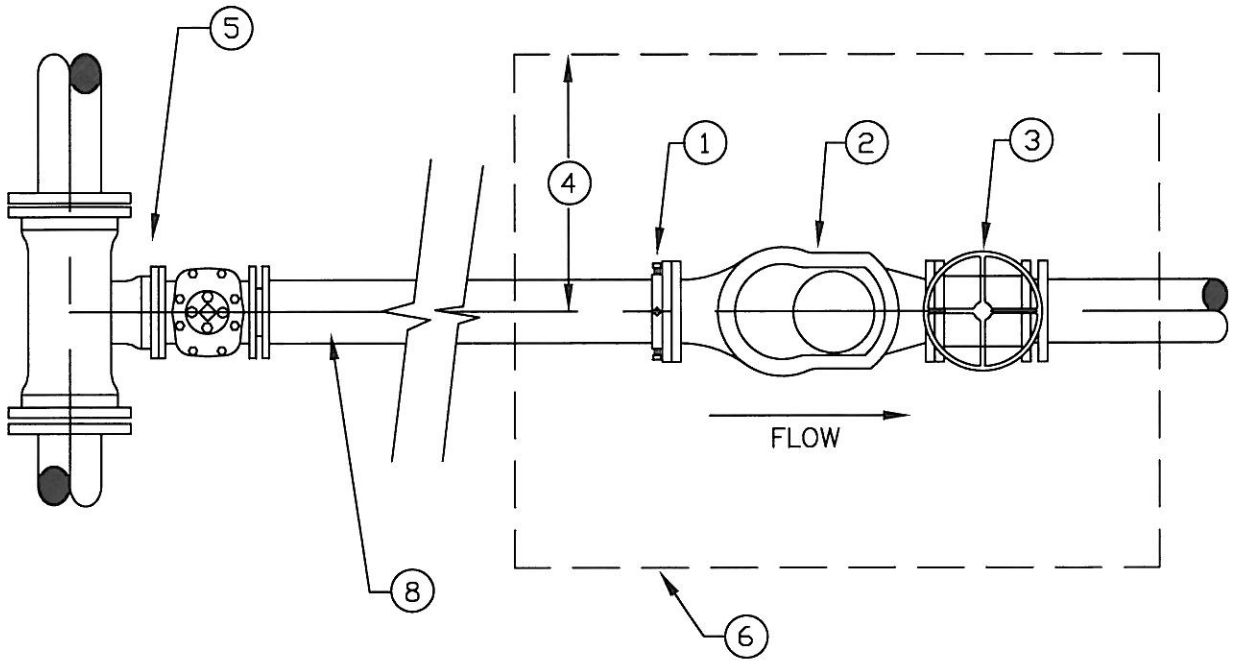

GENERAL NOTES

1. UNIFLANGE
2. ROCKWELL COMPOUND METER
3. GATE VALVE– FL X MJ
4. CENTER INSTALLATION IN VAULT
5. MAINLINE TEE AND VALVE (SEE STD. 6–5)
6. CONCRETE VAULT–SIZE AS REQUIRED, INSTALL WITH NO BOTTOM
7. PLACE VALVE SUPPORTS UNDER VALVES INSTALLED IN VAULT
8. DUCTILE IRON PIPING
9. INSTALL MH FRAME AND LID, CENTER OVER METER (SEE STD. 6–6)
10. INSTALLATION IS BY CITY OF BLAINE FORCES.

NO.	REVISION DESCRIPTION	PREP'D BY	DATE	APPROVED
	PREPARED FOR STD. MANUAL	SCP	2/14/96	

TYPICAL COMPOUND WATER METER INSTALLATION 3" TO 10"

CITY OF BLAINE
DEPT. OF PUBLIC WORKS

SIZE	PREV. DWG NO.	PUBLIC WORKS DRAWING NUMBER	
A		6-19A	
SCALE NONE		SHEET OF	REV. NO.

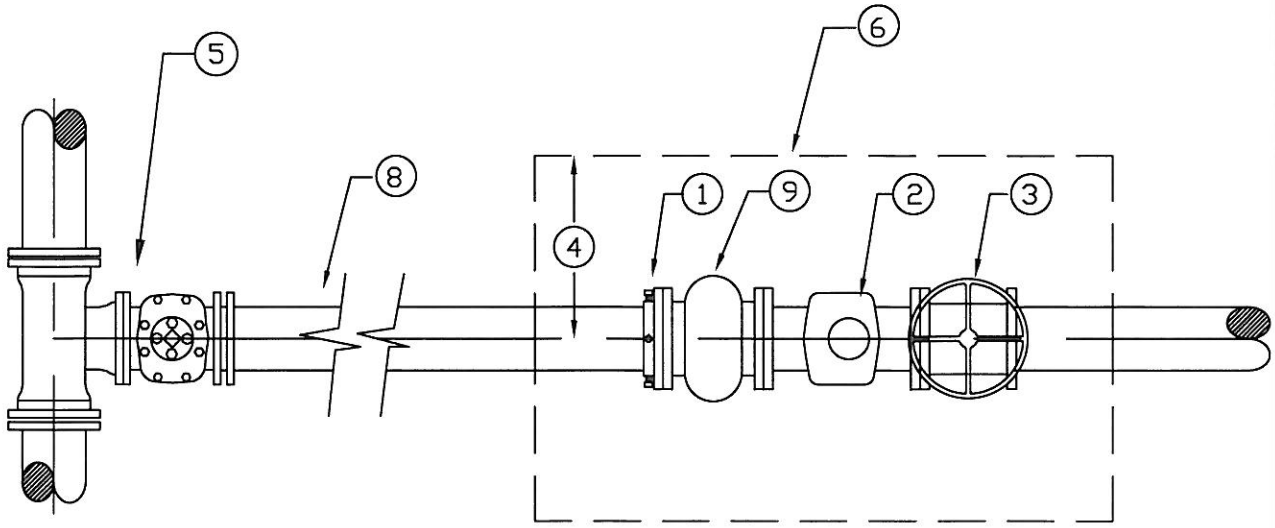

GENERAL NOTES

1. UNIFLANGE, SIZE AS REQUIRED.
2. ROCKWELL TURBINE METER–SIZE AS REQUIRED.
3. GATE VALVE–FL X MJ
4. CENTER METER INSTALLATION IN THE VAULT.
5. MAINLINE TEE AND VALVE (SEE STD. 6–5)
6. CONCRETE VAULT–SIZE AS REQUIRED, INSTALLED WITH NO BOTTOM
7. PLACE VALVE SUPPORTS UNDER VALVES AND SERVICE LINE AS REQUIRED.
8. DUCTILE IRON PIPING
9. STRAINER
10. INSTALL MH FRAME AND LID, CENTER OVER METER (SEE STD. 6–6)
11. WHEN INSTALLING TURBO–METERS WITH A STRAINER, A MINIMUM OF 5 PIPE DIAMETERS OF STRAIGHT RUN OF PIPE IS REQUIRED UPSTREAM OF THE METER. (A MINIMUM OF 10 PIPE DIAMETERS OF STRAIGHT RUN OF PIPE SHOULD BE USED UPSTREAM OF A METER INSTALLED WITHOUT A STRAINER. THE DELETION OF A STRAINER, HOWEVER, IS NOT RECOMMENDED.)
12. DO NOT INSTALL CHECK VALVES AND PRESSURE REDUCING DEVICES UPSTREAM OF THE METER.
13. EXTERNALLY WEIGHTED CHECK VALVES ANDE PRESSURE REDUCING DEVICES SHOULD NOT BE LOCATED CLOSER THAN 5 PIPE DIAMETERS DOWNSTREAM OF THE METER.
14. UNWEIGHTED CHECK VALVES SHOULD NOT BE LOCATED CLOSER THAN 3 PIPE DIAMETERS DOWNSTREAM OF THE METER.
15. VALVES IMMEDIATELY UPSTREAM OF THE METER SHOULD ONLY BE FULL–OPEN GATE VALVES. BUTTERFLY VALVES ARE ACCEPTABLE IF THEY ARE 5 PIPE DIAMETERS OR MORE UPSTREAM FROM THE METER. DOWNSTREAM, FULLY OPEN GATE OR BUTTERFLY VALVES CAN BE USED.
16. INSTALLATION IS BY CITY OF BLAINE FORCES.

NO.	REVISION DESCRIPTION	PREP'D BY	DATE	APPROVED
	PREPARED FOR STD. MANUAL	SCP	2/14/96	

TYPICAL TURBINE WATER METER INSTALLATION 3" TO 10"

CITY OF BLAINE
DEPT. OF PUBLIC WORKS

SIZE	PREV. DWG NO.	PUBLIC WORKS DRAWING NUMBER	
A		6–20	
SCALE NONE		SHEET OF	REV. NO.

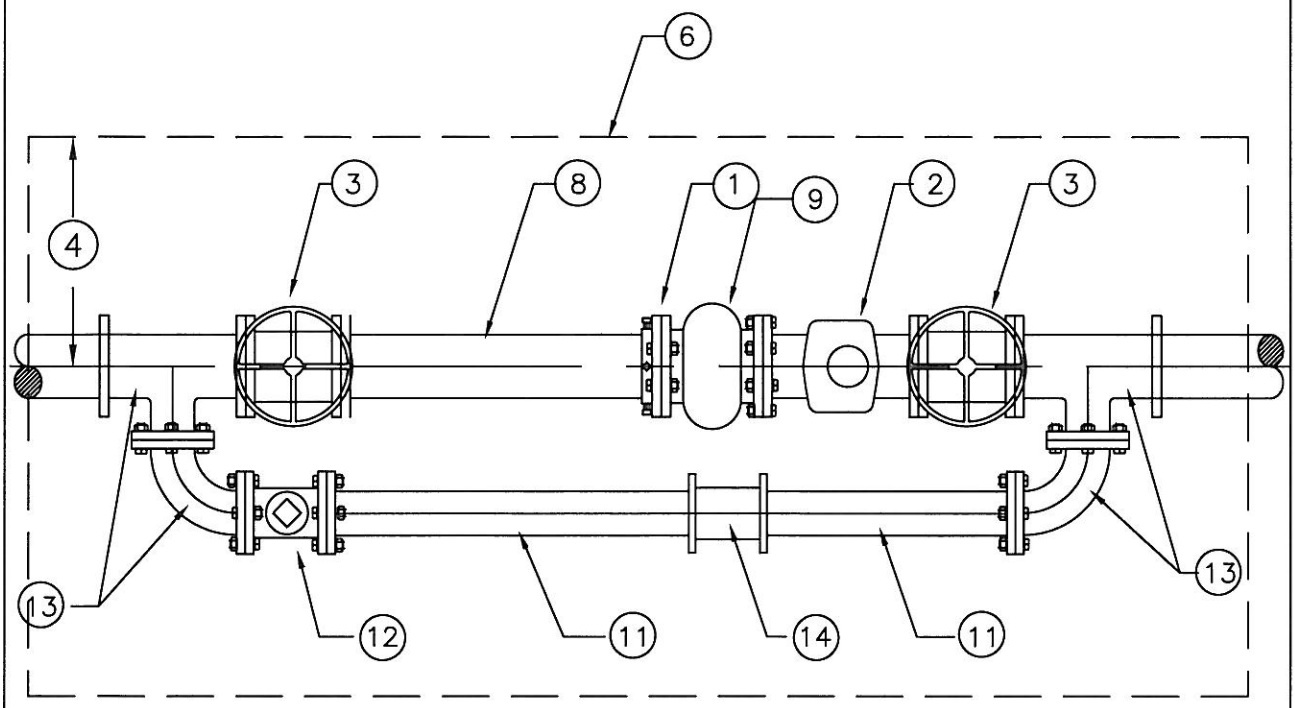

GENERAL NOTES

1. UNIFLANGE, SIZE AS REQUIRED.
2. ROCKWELL TURBINE METER–SIZE AS REQUIRED.
3. GATE VALVE–FL X MJ
4. CENTER METER INSTALLATION IN THE VAULT.
5. MAINLINE TEE AND VALVE (SEE STD. 6–5)
6. CONCRETE VAULT–SIZE AS REQUIRED, INSTALLED WITH NO BOTTOM
7. PLACE VALVE SUPPORTS UNDER VALVES AND SERVICE LINE AS REQUIRED.
8. DUCTILE IRON PIPING
9. STRAINER
10. INSTALL MH FRAME AND LID, CENTER OVER METER (SEE STD. 6–6)
11. BYPASS PIPING (SIZE PER ROCKWELL RECOMMENDATIONS)
12. BYPASS GATE VALVE
13. BYPASS 90° BENDS AND TEES (MAINLINE SIZE X BYPASS SIZE)
14. BYPASS COUPLING
15. WHEN INSTALLING TURBO–METERS WITH A STRAINER, A MINIMUM OF 5 PIPE DIAMETERS OF STRAIGHT RUN OF PIPE IS REQUIRED UPSTREAM OF THE METER. (A MINIMUM OF 10 PIPE DIAMETERS OF STRAIGHT RUN OF PIPE SHOULD BE USED UPSTREAM OF A METER INSTALLED WITHOUT A STRAINER. THE DELETION OF A STRAINER, HOWEVER, IS NOT RECOMMENDED.)
16. DO NOT INSTALL CHECK VALVES AND PRESSURE REDUCING DEVICES UPSTREAM OF THE METER.
17. EXTERNALLY WEIGHTED CHECK VALVES AND PRESSURE REDUCING DEVICES SHOULD NOT BE LOCATED CLOSER THAN 5 PIPE DIAMETERS DOWNSTREAM OF THE METER.
18. UNWEIGHTED CHECK VALVES SHOULD NOT BE LOCATED CLOSER THAN 3 PIPE DIAMETERS DOWNSTREAM OF THE METER.
19. VALVES IMMEDIATELY UPSTREAM OF THE METER SHOULD ONLY BE FULL–OPEN GATE VALVES. BUTTERFLY VALVES ARE ACCEPTABLE IF THEY ARE 5 PIPE DIAMETERS OR MORE UPSTREAM FROM THE METER. DOWNSTREAM, FULLY OPEN GATE OR BUTTERFLY VALVES CAN BE USED.
20. INSTALLATION IS BY CITY OF BLAINE FORCES.

NO.	REVISION DESCRIPTION	PREP'D BY	DATE	APPROVED
	PREPARED FOR STD. MANUAL	SCP	8/14/96	

TURBINE WATER METER INSTALLATION 3" TO 10" W/OPTIONAL BYPASS

CITY OF BLAINE
DEPT. OF PUBLIC WORKS

SIZE	PREV. DWG NO.	PUBLIC WORKS DRAWING NUMBER	
A		6–20A	
SCALE: NONE		SHEET OF	REV. NO.

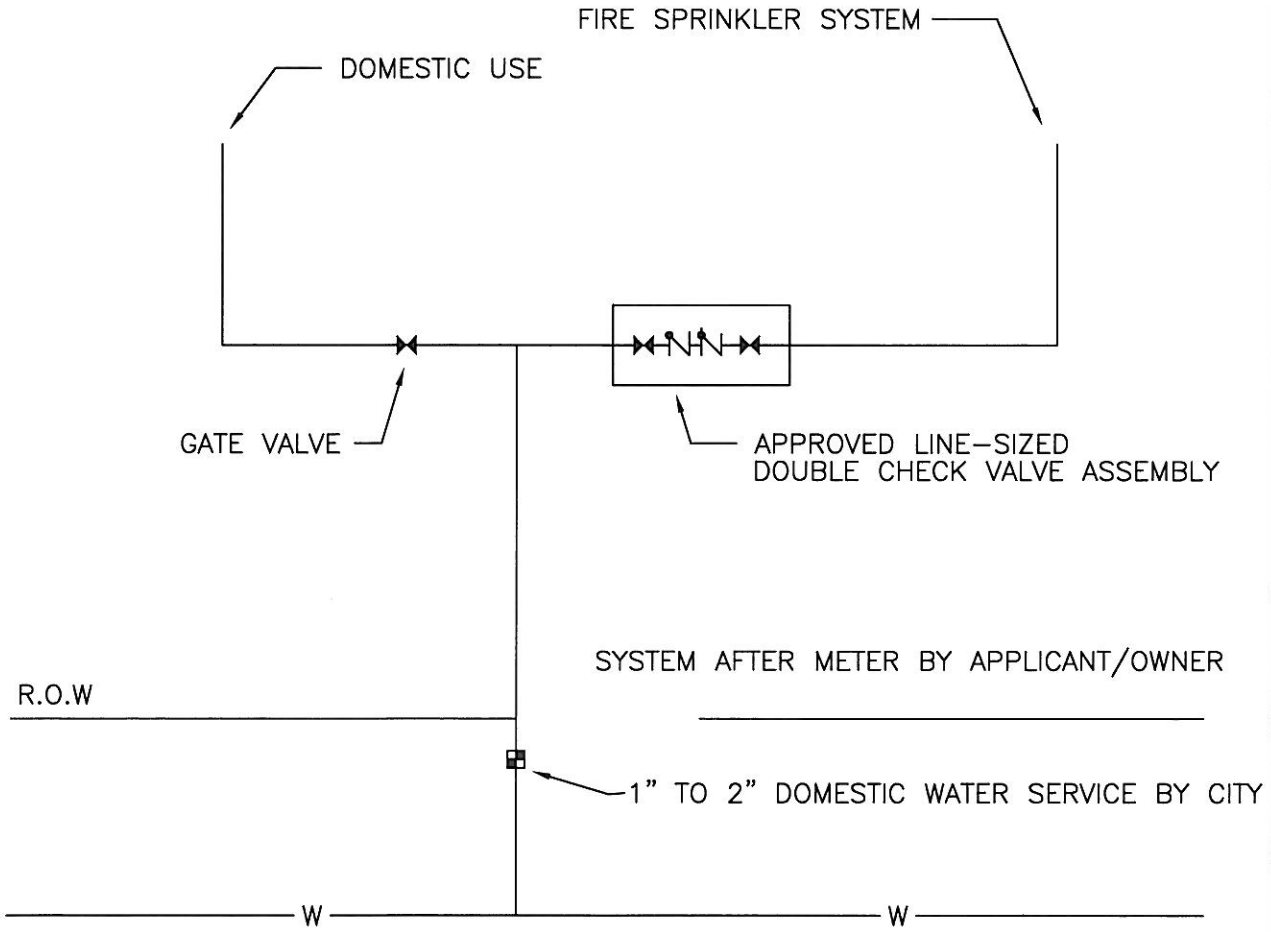

NO.	REVISION DESCRIPTION	PREP'D BY	DATE	APPROVED
	PREPARED FOR STD. MANUAL	SCP	2/14/96	

RESIDENTIAL FIRE SPRINKLER CHECK CHECK SYSTEM

CITY OF BLAINE
DEPT. OF PUBLIC WORKS

SIZE	PREV. DWG NO.	PUBLIC WORKS DRAWING NUMBER	
A		6-21	
SCALE NONE		SHEET OF	REV. NO.

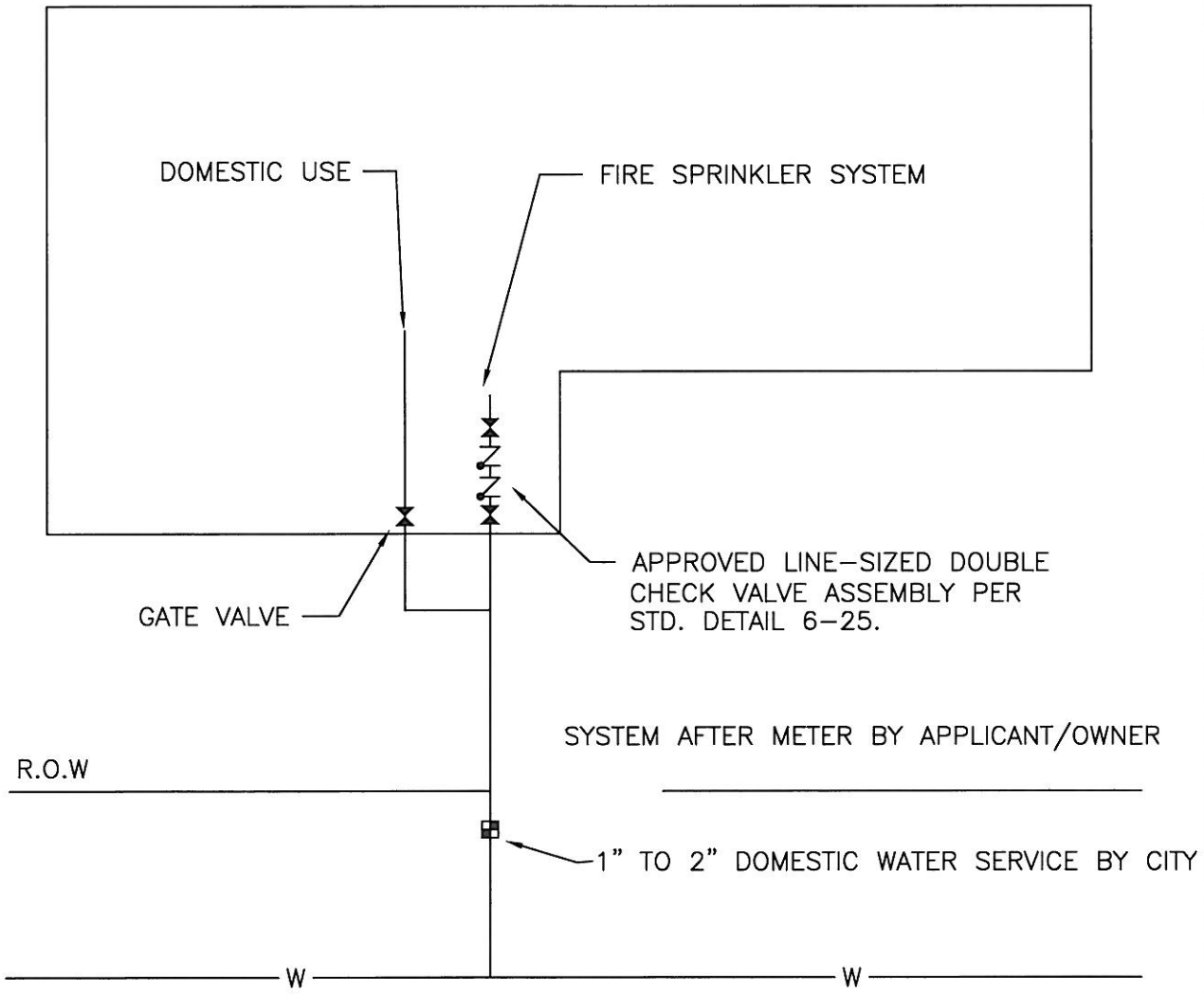

NO.	REVISION DESCRIPTION	PREP'D BY	DATE	APPROVED
	PREPARED FOR STD. MANUAL	SCP	2/14/96	

RESIDENTIAL FIRE SPRINKLER INSIDE CHECK SYSTEM

CITY OF BLAINE
DEPT. OF PUBLIC WORKS

SIZE	PREV. DWG NO.	PUBLIC WORKS DRAWING NUMBER	
A		6-22	
SCALE NONE	SHEET OF		REV. NO.

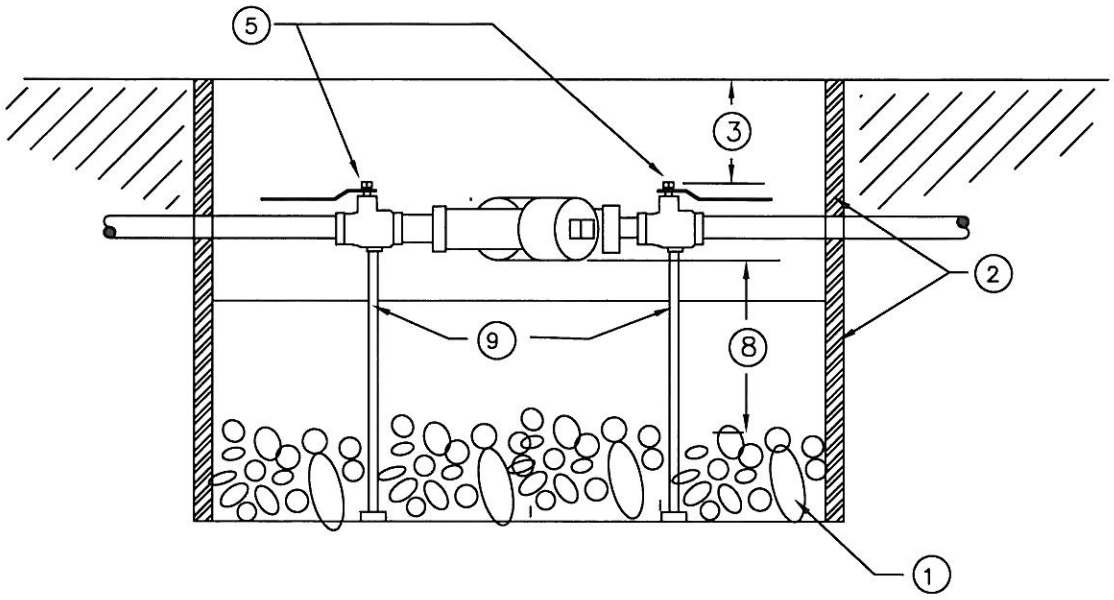

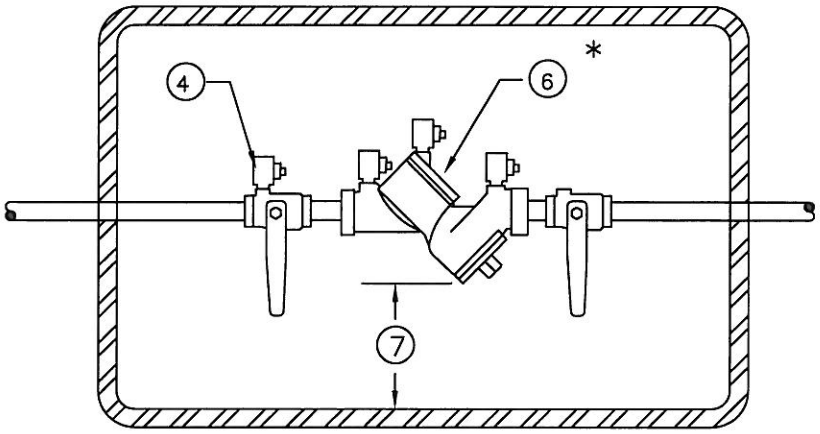

*INSTALL ACCORDING TO MANUFACTURER'S SPECIFICATIONS

NOTES

1 1" ROUND WASHED GRAVEL BY 6" DEEP ON BOTTOM OF BOX OF
2 ENCLOSE 2" & SMALLER D.C.V.A. IN 2 METER BOXES STACKED ON TOP OF EACH OTHER OR , OVERSIZED BOX. MUST HAVE A REMOVABLE COVER
3 MAXIMUM OF 3" DISTANCE BETWEEN UNDERSIDE OF LID AND HIGHEST POINT OF DEVICE.
4 MUST INCLUDE (4) RESILIENT SEATED TEST–COCKS WITH PLUGS INSTALLED.
5 THE D.C.V.A. MUST INCLUDE (2) RESILIENT SEATED SHUT OFF VALVES.
6 Y–PATTERN D.C.V.A. SHOULD BE INSTALLED ON SIDE.
7 WHEN TEST COCKS ARE FACING SIDEWAYS THERE MUST BE A 6" MIN CLEARANCE BETWEEN THEM AND SIDE OF BOX.
8 MIN OF 12" BETWEEN LOWEST POINT OF DEVICE AND DRAIN ROCK.
9 PROVIDE SUPPORT FOR 2" DEVICES.
10 TEST BEFORE USE AND SEND REPORT TO BLAINE WATER UTILITY FOR APPROVAL.

NO.	REVISION DESCRIPTION	PREP'D BY	DATE	APPROVED
	PREPARED FOR STD. MANUAL	SCP	2/14/96	

3/4" TO 2" OUTSIDE INSTALLED IRRIGATION OR FIRE SPRINKLER DOUBLE CHECK VALVE ASSEMBLY

CITY OF BLAINE
DEPT. OF PUBLIC WORKS

SIZE	PREV. DWG NO.	PUBLIC WORKS DRAWING NUMBER	
A		6-24	
SCALE: NONE	SHEET OF		REV. NO.

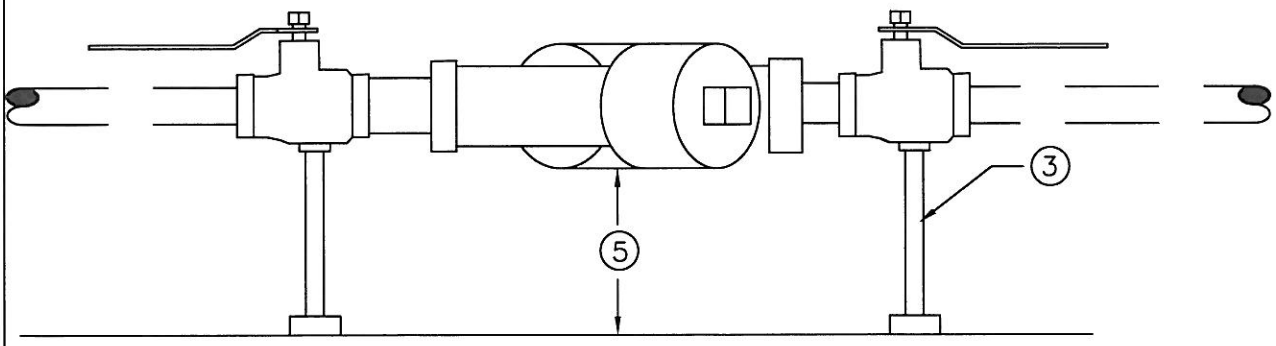

PROFILE

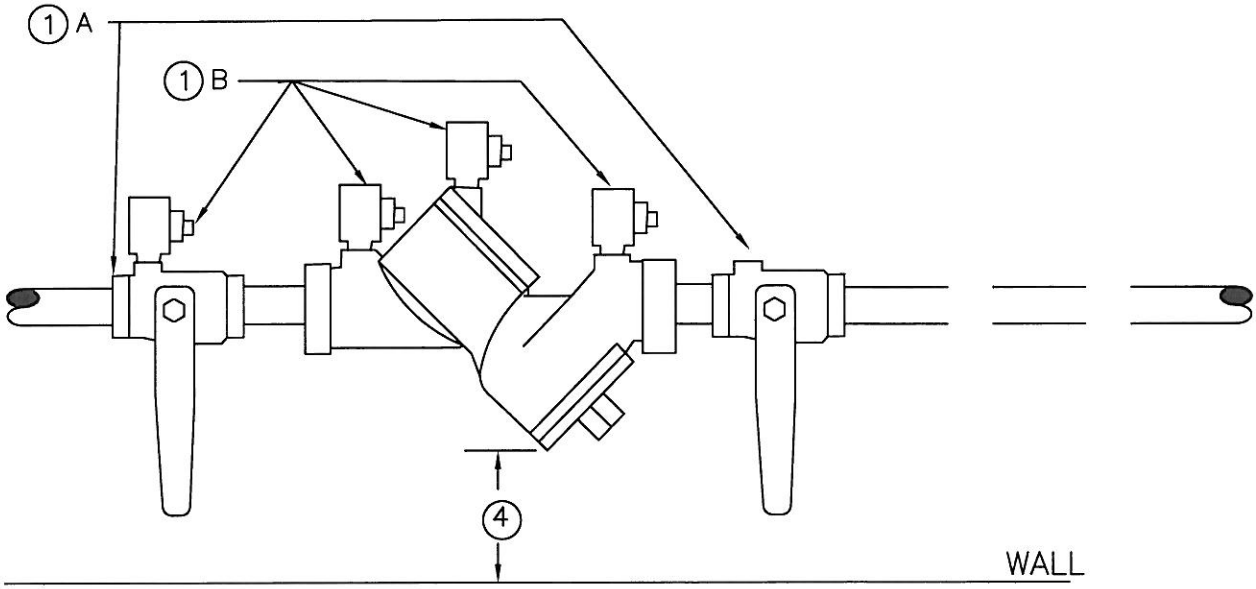

PLAN

① LINE–SIZED WA. STATE APPROVED DOUBLE CHECK VALVE ASSEMBLY.
–A. THE D.C.V.A. INCLUDES 2 RESILIENT–SEATED SHUT–OFF VALVES.
–B. THE D.C.V.A. INCLUDES 4 RESILIENT–SEATED TEST COCKS.
② THE D.C.V.A. MUST BE INSTALLED HORIZONTALLY, NOT VERTICALLY.
③ 2 SUPPORTS (EITHER WALL OR FLOOR) ONE ON EACH SIDE OF DEVICE, MUST FIRMLY ANCHOR DEVICE.
④ MUST PROVIDE A MINIMUM IF 6" SIDE CLEARANCE BETWEEN D.C.V.A. AND WALL OR OBSTRUCTION.
⑤ CLEARANCE BETWEEN FLOOR AND DEVICE MUST BE A MINIMUM OF 12" AND A MAXIMUM OF 5'.
⑥ TEST BEFORE USE AND SEND REPORT TO BLAINE WATER UTILITY FOR APPROVAL.
⑦ REQUIRES ANNUAL BACKFLOW TEST BY A CERTIFIED TESTER.
⑧ PROTECT AGAINST FREEZING OR DAMAGE. USE HEAT–TAPE IF AREA IS SUBJECT TO FREEZING.

NO.	REVISION DESCRIPTION	PREP'D BY	DATE	APPROVED
	PREPARED FOR STD. MANUAL	SCP	2/14/96	

3/4" TO 2–1/2" INSIDE INSTALLED DOUBLE CHECK VALVE ASSEMBLY

CITY OF BLAINE
DEPT. OF PUBLIC WORKS

SIZE	PREV. DWG NO.	PUBLIC WORKS DRAWING NUMBER	
A		6–25	
SCALE NONE	SHEET OF		REV. NO.

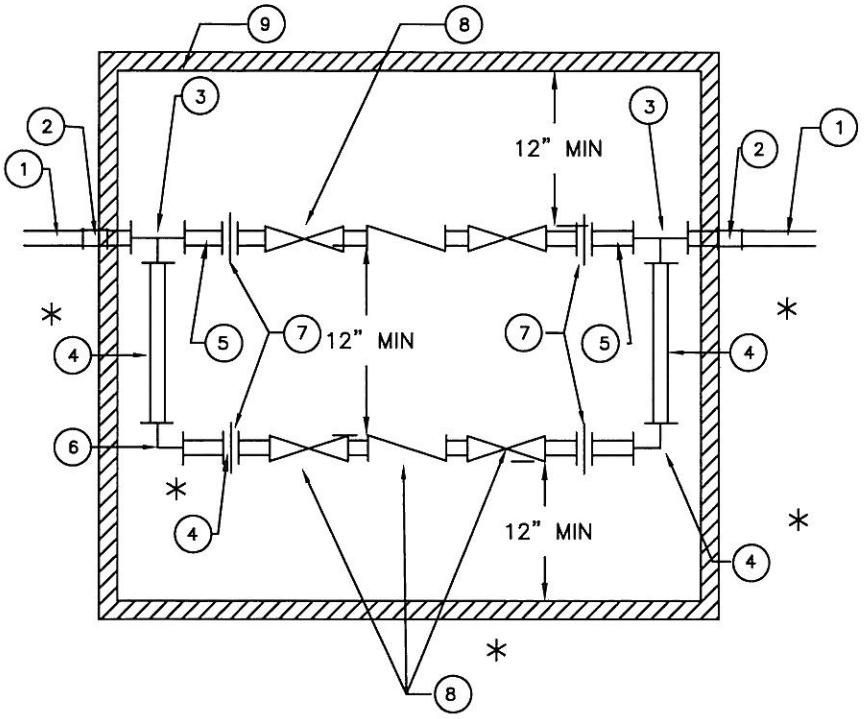

TYPICAL INSTALLATION

THIS INSTALLATION IS INSTALLED BY AND MAINTAINED BY THE OWNER/ CONTRACTOR. PLACEMENT IS ON PRIVATE PROPERTY.

CHECK LOCAL PLUMBING AND CROSS CONNECTION CONTROL CODES FOR INSTALLATION REQUIREMENTS.

THE CITY OF BLAINE SHALL NOT BE HELD LIABLE OR RESPONSIBLE FOR ERRORS OR OMISSIONS IN THIS TYPICAL INSTALLATION.

* BYPASS SHOWN IS SUBJECT TO CODE REQUIREMENTS

GENERAL NOTES

(1) TYPE K, COPPER TUBING

(2) COMPRESSION COUPLING, MALE IP X COMPRESSION

(3) BRASS TEE, MAIN LINE SIZE X 1", IP THREAD

(4) BRASS NIPPLE, TO FIT, 1"

(5) BRASS NIPPLE, MAIN LINE SIZE, TO FIT

(6) BRASS ELL, 1" IP THREAD

(7) BRASS UNION, MALE X FEMALE IP THREAD

(8) STATE APPROVED INTERNALLY LOADED DOUBLE CHECK VALVE ASSEMBLY, COMPLETE WITH 2 FULL FLOW RESILIENT SEATED SHUT-OFF VALVES AND TEST COCKS.

(9) CONCRETE VAULT, SIZED TO FIT

NO.	REVISION DESCRIPTION	PREP'D BY	DATE	APPROVED
	PREPARED FOR STD. MANUAL	SCP	2/14/96	

DOUBLE CHECK VALVE (PRIVATE INSTALL) (1-1/2" & 2" SIZES)

CITY OF BLAINE
DEPT. OF PUBLIC WORKS

SIZE	PREV. DWG NO.	PUBLIC WORKS DRAWING NUMBER	
A		6-26	
SCALE NONE		SHEET OF	REV. NO.

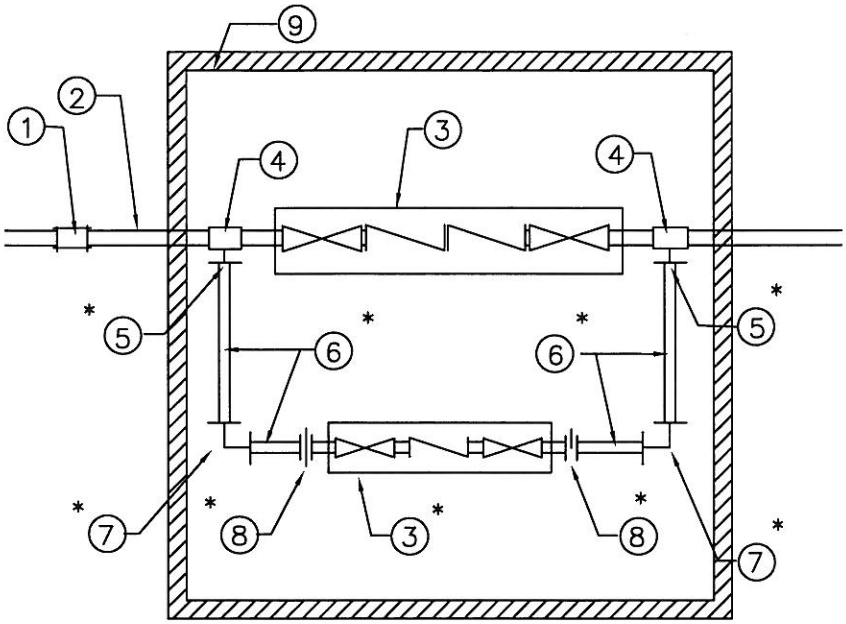

TYPICAL INSTALLATION

THIS INSTALLATION IS INSTALLED AND MAINTAINED BY THE OWNER/ CONTRACTOR. PLACEMENT IS ON PRIVATE PROPERTY.

CHECK LOCAL PLUMBING AND CROSS CONNECTION CONTROL CODES FOR INSTALLATION REQUIRMENTS.

THE CITY OF BLAINE SHALL NOT BE HELD LIABLE OR RESPONSIBLE FOR ERRORS OR OMISSIONS IN THIS TYPICAL INSTALLATION.

BYPASS SHOWN IS SUBJECT TO CODE REQUIREMENTS.

GENERAL INSTALLATION NOTES

1. FLEX COUPLING
2. D.I. PIPE, CUT TO FIT
3. STATE APPROVED INTERNALLY LOADED DOUBLE CHECK VALVE ASSEMBLY, COMPLETE WITH 2 FULL FLOW RESILIENT SEATED SHUT–OFF VALVES AND TEST COCK
4. SERVICE SADDLE
5. COMPRESSION COUPLING
6. TYPE K COPPER TUBING
7. 90° COPPER SWEAT ELL
8. COUPLING, COMPRESSION X IP
9. CONCRETE VAULT, SIZED TO FIT

SUGGESTED BYPASS SIZES

METER SIZE	MAIN–LINE	BY PASS
3"	3" D.I.	1 1/2" COPPER
4"	4" D.I.	1 1/2" COPPER
6"	6" D.I.	2" COPPER

NO.	REVISION DESCRIPTION	PREP'D BY	DATE	APPROVED
	PREPARED FOR STD. MANUAL	SCP	2/14/96	

DOUBLE CHECK VALVE (PRIVATE INSTALL) (3" TO 6" SIZES)

CITY OF BLAINE DEPT. OF PUBLIC WORKS

SIZE	PREV. DWG NO.	PUBLIC WORKS DRAWING NUMBER	
A		6–27	
SCALE: NONE		SHEET OF	REV. NO.

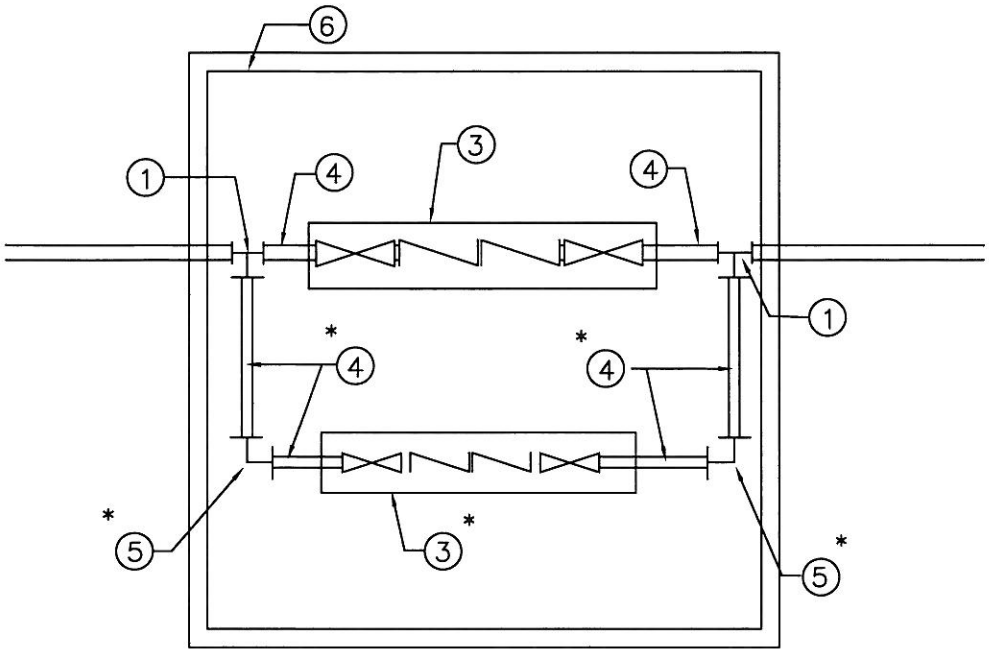

TYPICAL INSTALLATION

THIS INSTALLATION IS INSTALLED BY AND MAINTAINED BY THE OWNER/ CONTRACTOR. PLACEMENT IS ON PRIVATE PROPERTY.

CHECK LOCAL PLUMBING AND CROSS CONNECTION CONTROL CODES FOR INSTALLATION REQUIREMENTS.

THE CITY OF BLAINE SHALL NOT BE HELD LIABLE OR RESPONSIBLE FOR ERRORS OR OMISSIONS IN THIS TYPICAL INSTALLATION.

* BYPASS SHOWN IS SUBJECT TO CODE REQUIREMENTS.

GENERAL NOTES

(1) TEE, MJ, MAINLINE SIZE BY 4" BRANCH

(2) PIPE, PE X FL, CUT TO FIT

(3) STATE APPROVED INTERNALLY LOADED DOUBLE CHECK VALVE ASSEMBLY, COMPLETE WITH 2 FULL FLOW RESILIENT SEATED SHUT-OFF VALVES AND TEST COCKS.

(4) 4" PIPE, PE X PE, CUT TO FIT

(5) 4" 90° BEND, MJ X MJ

(6) CONCRETE VAULT, SIZED TO FIT

NO.	REVISION DESCRIPTION	PREP'D BY	DATE	APPROVED
	PREPARED FOR STD. MANUAL	SCP	2/14/96	

DOUBLE CHECK VALVE (PRIVATE INSTALL) (8" TO 10" SIZES)

CITY OF BLAINE DEPT. OF PUBLIC WORKS

SIZE	PREV. DWG NO.	PUBLIC WORKS DRAWING NUMBER	
A		6-28	
SCALE NONE		SHEET OF	REV. NO.

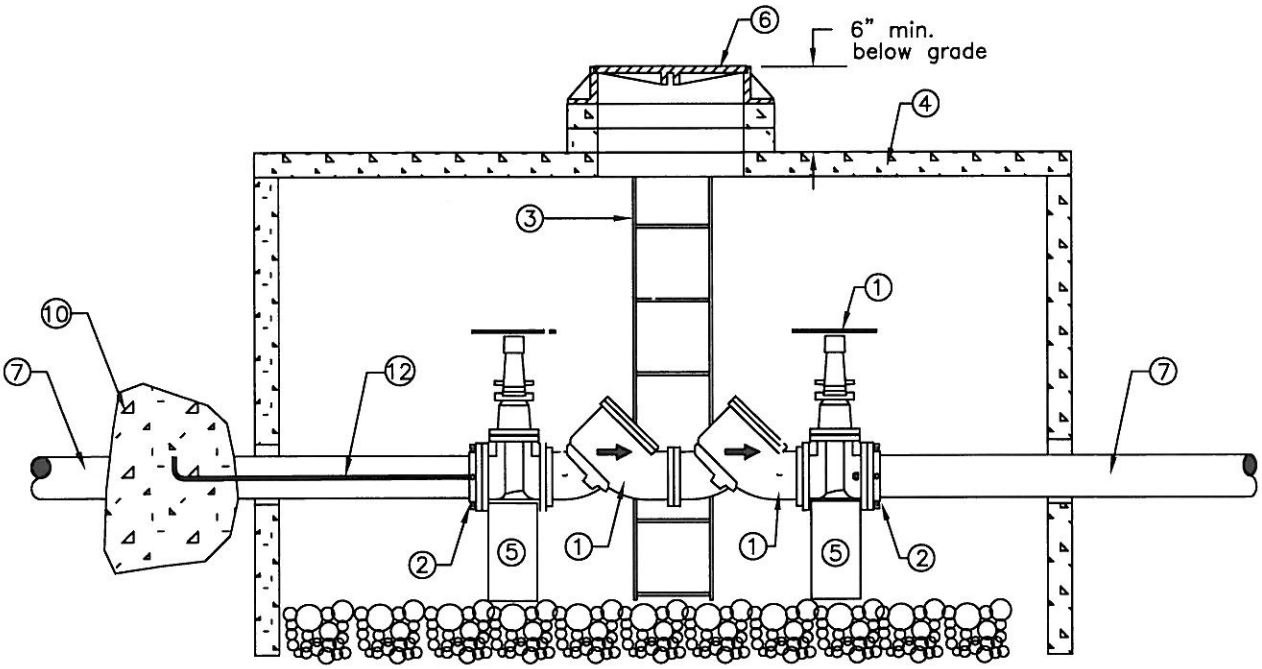

SECTION

GENERAL NOTES

1. AWWA DOUBLE CHECK VALVE ASSEMBLY, COMPLETE WITH 2 RESILIENT SEATED OS&Y VALVES AND 4 RESILIENT SEATED TEST COCKS
2. UNIFLANGE PIPE ADAPTER
3. ONE GALVANIZED STEEL LADDER TO BE SECURED TO VAULT.
4. CONCRETE VAULT–SIZE AS REQUIRED INSTALL WITH NO BOTTOM
5. CONCRETE VALVE SUPPORTS
6. MH FRAME & LID CENTERED OVER METER
7. CL 50 D.I. PIPE
8. INSTALLATION SHALL BE CENTERED IN VAULT
9. A TEE AND VALVE SHALL BE INSTALLED ON MAINLINE
10. VALVES INSTALLED IN VAULT SHALL BE TIE RODDED TO THRUST BLOCKS OUTSIDE OF VAULT
11. INSTALLATION BY CITY OF BLAINE FORCES
12. 2–3/4" DIA. GALVANIZED THD. ROD.

NO.	REVISION DESCRIPTION	PREP'D BY	DATE	APPROVED
	PREPARED FOR STD. MANUAL	SCP	8/14/96	

DOUBLE CHECK VALVE ASSEMBLY

CITY OF BLAINE
DEPT. OF PUBLIC WORKS

SIZE	PREV. DWG NO.	PUBLIC WORKS DRAWING NUMBER	
A		6–29	
SCALE NONE	SHEET OF		REV. NO.

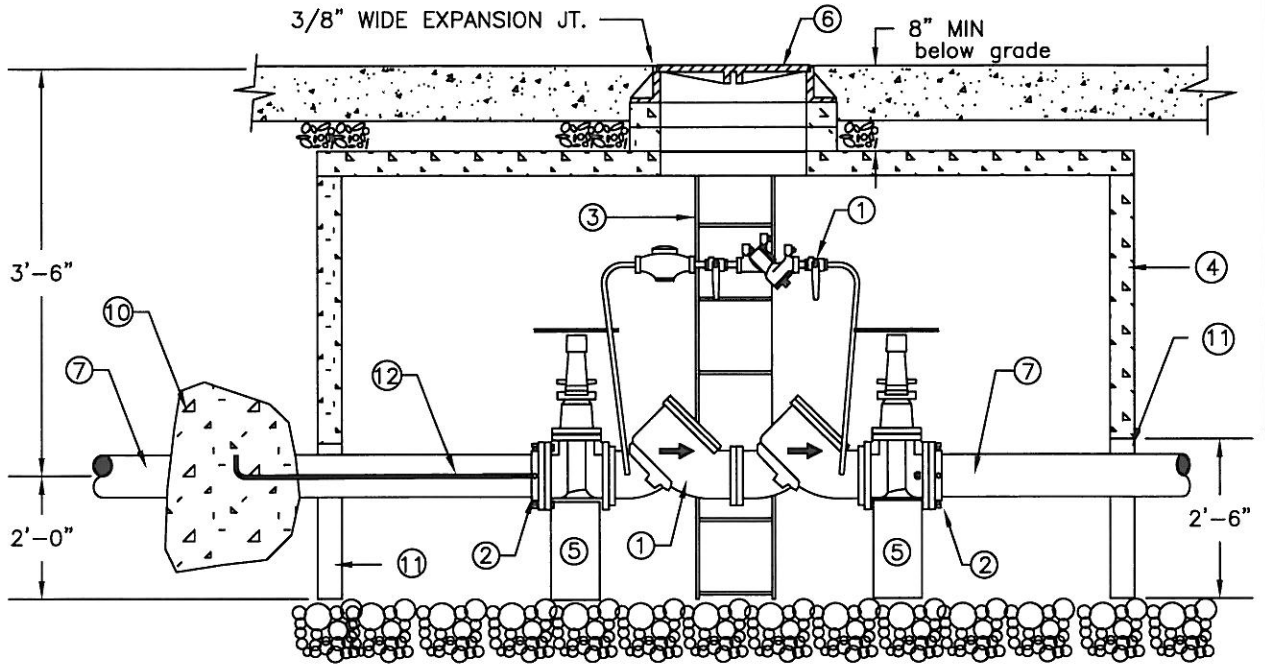

SECTION

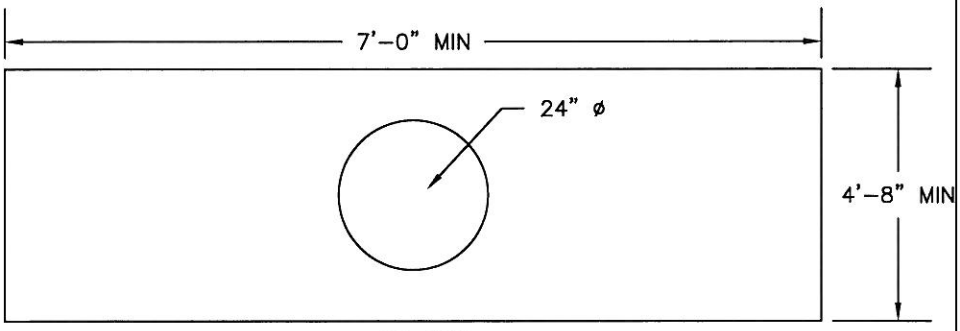

PLAN

GENERAL NOTES

(1) EXISTING DOUBLE CHECK VALVE ASSEMBLY, COMPLETE WITH 2 RESILIENT SEATED OS&Y VALVES AND 4 RESILIENT SEATED TEST COCKS AND BRASS OR COPPER DETECTOR BY-PASS.

(2) UNIFLANGE ADAPTER (6x4 REDUCER WHERE NECESSARY, SEE PLAN).

(3) ONE GALVANIZED STEEL LADDER TO BE SECURED TO VAULT.

(4) CONCRETE UTILITY VAULT SIMILIAR TO UTILITY VAULT CO. MODEL #575-LA.

(5) CONCRETE VALVE SUPPORTS

(6) MH FRAME & LID CENTERED OVER METER, ALUMINUM MH FRAME AND LID TO BE SUPPLIED BY CITY OF BLAINE UTILITIES, TO BE USED IN SIDEWALK AREAS ONLY

(7) CL 50 D.I. PIPE

(8) INSTALLATION SHALL BE CENTERED IN VAULT.

(9) A TEE AND VALVE SHALL BE INSTALLED ON MAINLINE

(10) VALVES INSTALLED IN VAULT SHALL BE TIE-RODDED TO THRUST BLOCKS OUTSIDE OF THE VAULT. THRUST BLOCKS PER STANDARD PLAN 6-2.

(11) 8" WIDE SLOTTED OPENING W/FULL RADIUS. GROUT & SEAL AROUND PIPE ONCE VAULT IS SET.

(12) 2-3/4" DIA. GALVANIZED THD. ROD.

NO.	REVISION DESCRIPTION	PREP'D BY	DATE	APPROVED
	PREPARED FOR STD. MANUAL	SCP	2/14/96	

DOUBLE CHECK VALVE ASSEMBLY W/DETECTOR (FOR FIRE LINES)

CITY OF BLAINE
DEPT. OF PUBLIC WORKS

SIZE	PREV. DWG NO.	PUBLIC WORKS DRAWING NUMBER	
A		6-30	
SCALE NONE	SHEET OF		REV. NO.

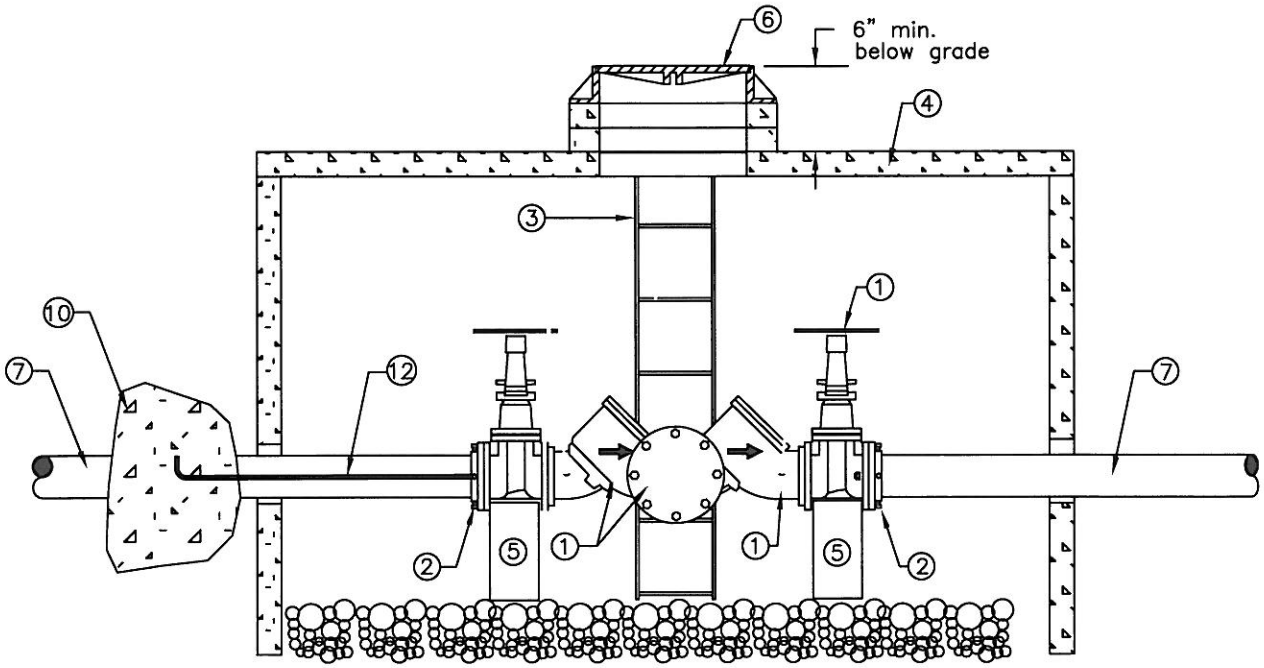

SECTION

GENERAL NOTES

1. AWWA REDUCED PRESSURE PRINCIPLE BACKFLOW ASSEMBLY, WITH 2 RESILIENT SEATED OS&Y VALVES AND 4 RESILIENT SEATED TEST COCKS
2. UNIFLANGE PIPE ADAPTER
3. ONE GALVANIZED STEEL LADDER TO BE SECURED TO VAULT.
4. CONCRETE VAULT–SIZE AS REQUIRED INSTALL WITH NO BOTTOM
5. CONCRETE VALVE SUPPORTS
6. MH FRAME & LID CENTERED OVER METER
7. CL 50 D.I. PIPE
8. INSTALLATION SHALL BE CENTERED IN VAULT
9. A TEE AND VALVE SHALL BE INSTALLED ON MAINLINE
10. VALVES INSTALLED IN VAULT SHALL BE TIE RODDED TO THRUST BLOCKS OUTSIDE OF VAULT
11. INSTALLATION IS BY CITY OF BLAINE FORCES
12. 2–3/4" DIA. GALVANIZED TRD. ROD.

NO.	REVISION DESCRIPTION	PREP'D BY	DATE	APPROVED
	PREPARED FOR STD. MANUAL	SCP	2/14/96	

REDUCED PRESSURE PRINCIPLE BACKFLOW ASSEMBLY

CITY OF BLAINE
DEPT. OF PUBLIC WORKS

SIZE	PREV. DWG NO.	PUBLIC WORKS DRAWING NUMBER	
A		6–31	
SCALE NONE		SHEET OF	REV. NO.

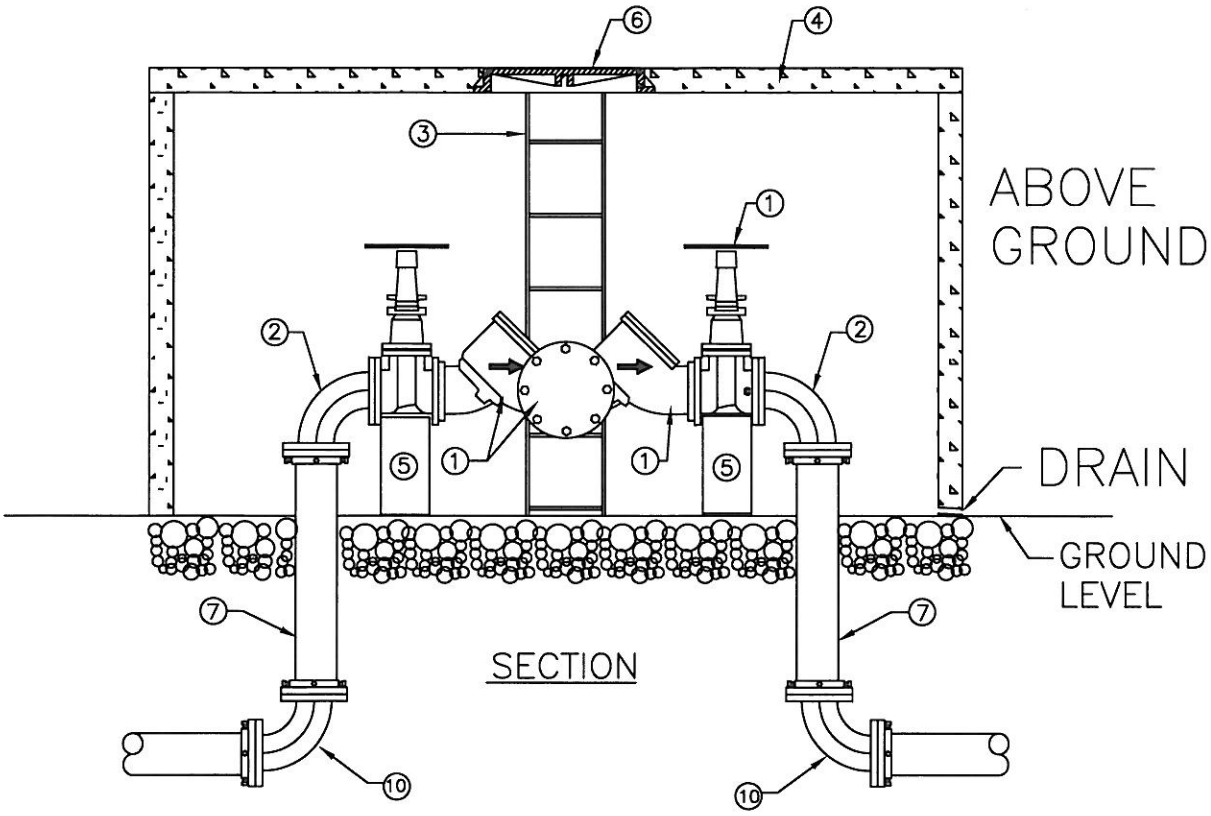

NOTE: SEE UTILITY STANDARD 6–32A FOR INSTALLATION ON A FIRELINE

GENERAL NOTES

1. AWWA REDUCED PRESSURE PRINCIPLE BACKFLOW ASSEMBLY, WITH 2 RESILIENT SEATED OS&Y VALVES AND 4 RESILIENT SEATED TEST COCKS
2. MJ X F BENDS
3. ONE GALVANIZED STEEL LADDER TO BE SECURED TO VAULT.
4. CONCRETE VAULT–SIZE AS REQUIRED INSTALL WITH NO BOTTOM
5. CONCRETE VALVE SUPPORTS
6. STANDARD VAULT LID, CENTERED OVER METER
7. CL 50 D.I. PIPE
8. INSTALLATION SHALL BE CENTERED IN VAULT
9. A TEE AND VALVE SHALL BE INSTALLED ON MAINLINE
10. MJ X MJ BENDS
11. INSTALLATION IS BY CITY OF BLAINE FORCES

DWG#: 6–31A	TIME: 02–28–96 2:22 PM			
	PREPARED FOR STD. MANUAL	SCP	2/14/96	
NO.	REVISION DESCRIPTION	PREP'D BY	DATE	APPROVED

REDUCED PRESSURE PRINCIPLE BACKFLOW ASSEMBLY

CITY OF BLAINE
DEPT. OF PUBLIC WORKS

SIZE	PREV. DWG NO.	PUBLIC WORKS DRAWING NUMBER	
A		6–31A	
SCALE NONE	SHEET OF		REV. NO.

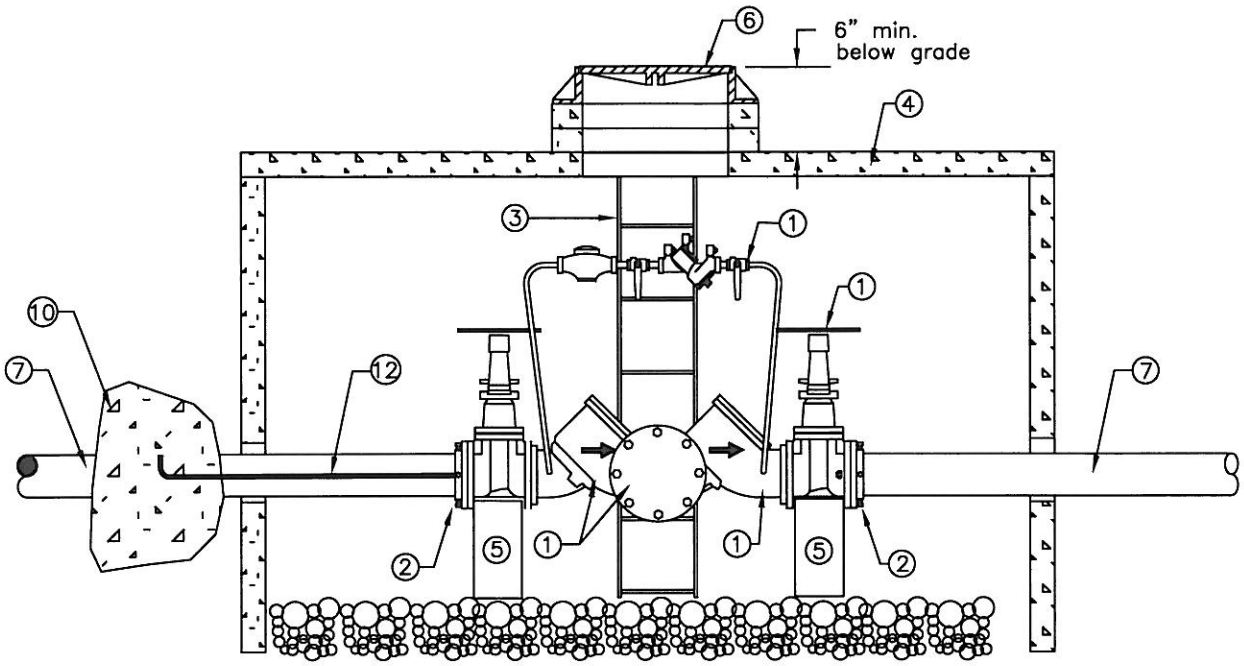

SECTION

GENERAL NOTES

1. AWWA REDUCED PRESSURE PRINCIPLE BACKFLOW ASSEMBLY, WITH 2 RESILIENT SEATED OS&Y VALVES AND 4 RESILIENT SEATED TEST COCKS AND BRASS OR COPPER DETECTOR BY–PASS.
2. UNIFLANGE PIPE ADAPTER
3. ONE GALVANIZED STEEL LADDER TO BE SECURED TO VAULT.
4. CONCRETE VAULT–SIZE AS REQUIRED INSTALL WITH NO BOTTOM
5. CONCRETE VALVE SUPPORTS
6. MH FRAME & LID CENTERED OVER METER
7. CL 50 D.I. PIPE
8. INSTALLATION SHALL BE CENTERED IN VAULT
9. A TEE AND VALVE SHALL BE INSTALLED ON MAINLINE
10. VALVES INSTALLED IN VAULT SHALL BE TIE RODDED TO THRUST BLOCKS OUTSIDE OF VAULT
11. INSTALLATION IS BY CITY OF BLAINE FORCES
12. 2–3/4" DIA. GALVANIZED TRD. ROD.

NO.	REVISION DESCRIPTION	PREP'D BY	DATE	APPROVED
	PREPARED FOR STD. MANUAL	SCP	2/14/96	

REDUCED PRESSURE PRINCIPLE BACKFLOW ASSEMBLY (FIRELINES)

CITY OF BLAINE
DEPT. OF PUBLIC WORKS

SIZE	PREV. DWG NO.	PUBLIC WORKS DRAWING NUMBER	
A		6–32	
SCALE NONE		SHEET OF	REV. NO.

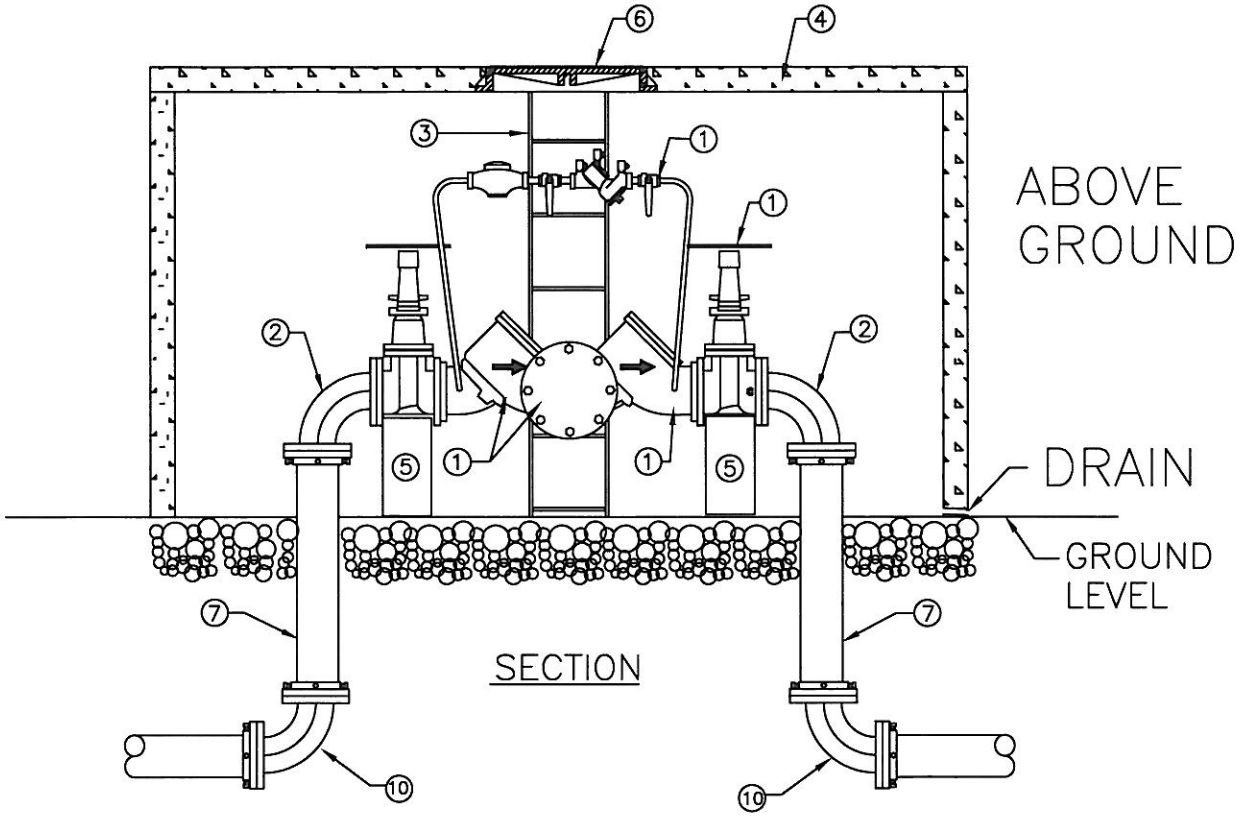

GENERAL NOTES

1. AWWA REDUCED PRESSURE PRINCIPLE BACKFLOW ASSEMBLY, WITH 2 RESILIENT SEATED OS&Y VALVES AND 4 RESILIENT SEATED TEST COCKS AND BRASS OR COPPER DETECTOR BY–PASS.
2. MJ X F BENDS
3. ONE GALVANIZED STEEL LADDER TO BE SECURED TO VAULT.
4. CONCRETE VAULT–SIZE AS REQUIRED INSTALL WITH NO BOTTOM
5. CONCRETE VALVE SUPPORTS
6. STANDARD VAULT LID, CENTERED OVER METER
7. CL 50 D.I. PIPE
8. INSTALLATION SHALL BE CENTERED IN VAULT
9. A TEE AND VALVE SHALL BE INSTALLED ON MAINLINE
10. MJ X MJ BENDS
11. INSTALLATION IS BY CITY OF BLAINE FORCES

NO.	REVISION DESCRIPTION	PREP'D BY	DATE	APPROVED
	PREPARED FOR STD. MANUAL	SCP	2/21/96	

REDUCED PRESSURE PRINCIPLE BACKFLOW ASSEMBLY (FIRELINES)

CITY OF BLAINE
DEPT. OF PUBLIC WORKS

SIZE	PREV. DWG NO.	PUBLIC WORKS DRAWING NUMBER	REV. NO.
A		6–32A	
SCALE NONE	SHEET OF		

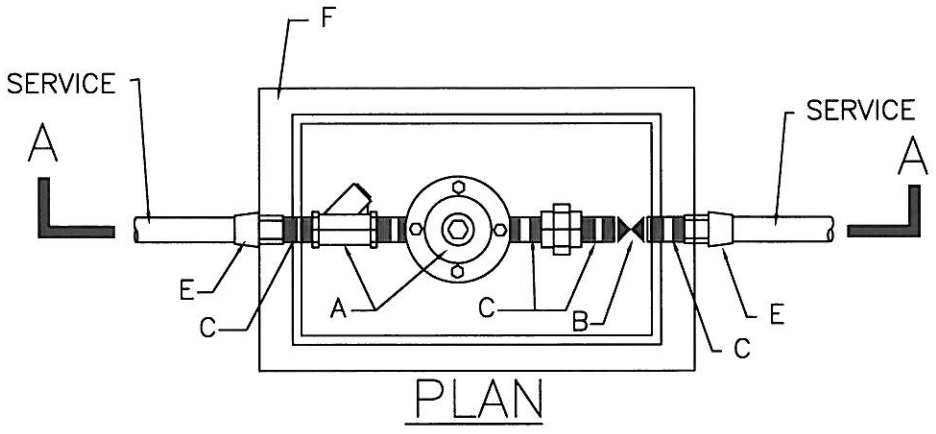

PLAN

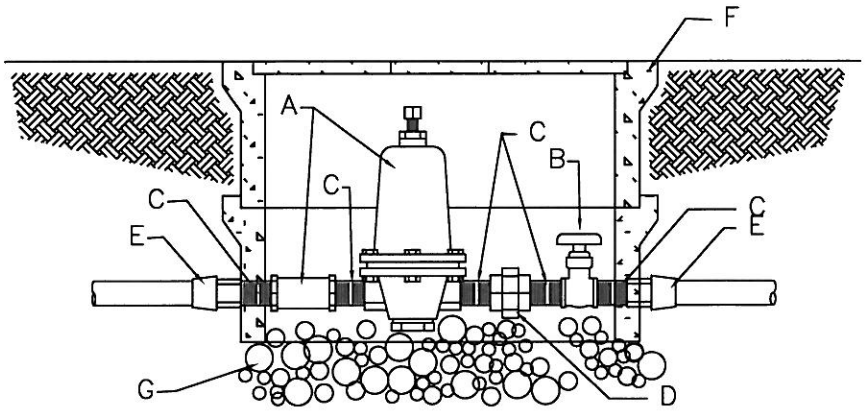

SECTION A–A

BILL OF MATERIALS

A PRESSURE REGULATOR – MUELLER H–9300, NO 2 SETTING, STRAINER W/ BLOW OFF PLUG.
B BRONZE GATE VALVE, SOLID WEDGE TYPE – MUELLER H–10914.
C NIPPLE X 2–1/2" LONG, MALE
D UNION, FEMALE
E ADAPTER, FEMALE X COMPRESSION FITTING FOR COPPER.
F 17" X 28" METER BOX W/ TRAFFIC COVER AND 12" RISER, FOGTITE NO. 2T.
G 1" ROUND WASHED GRAVEL, 8" MIN. DEPTH.

NOTES

1 PRESSURE REGULATOR SIZE AS SPECIFIED OR SHOWN ON CONTRACT PLAN.
2 SIZES FOR ITEMS B THROUGH E SHALL CORRESPOND TO THE SPECIFIED SIZE OF THE PRESSURE REGULATOR.
3 ALL FITTINGS AND NIPPLES ARE BRASS WITH IRON PIPE THREADS.

NO.	REVISION DESCRIPTION	PREP'D BY	DATE	APPROVED
	PREPARED FOR STD. MANUAL	SCP	2/14/96	

INDIVIDUAL PRESSURE REDUCING VALVE ASSEMBLY

CITY OF BLAINE
DEPT. OF PUBLIC WORKS

SIZE	PREV. DWG NO.	PUBLIC WORKS DRAWING NUMBER	
A		6–33	
SCALE NONE		SHEET OF	REV. NO.

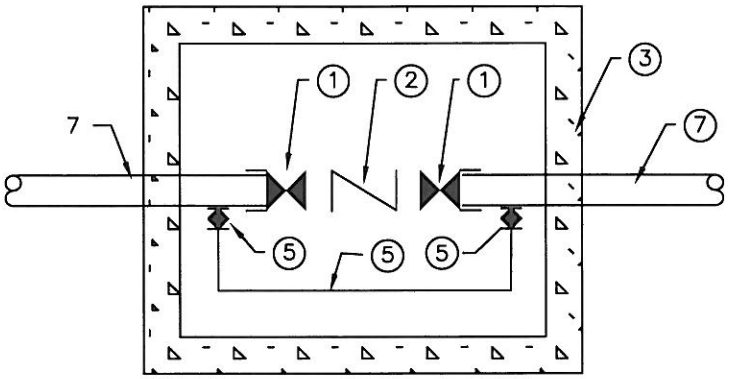

PLAN

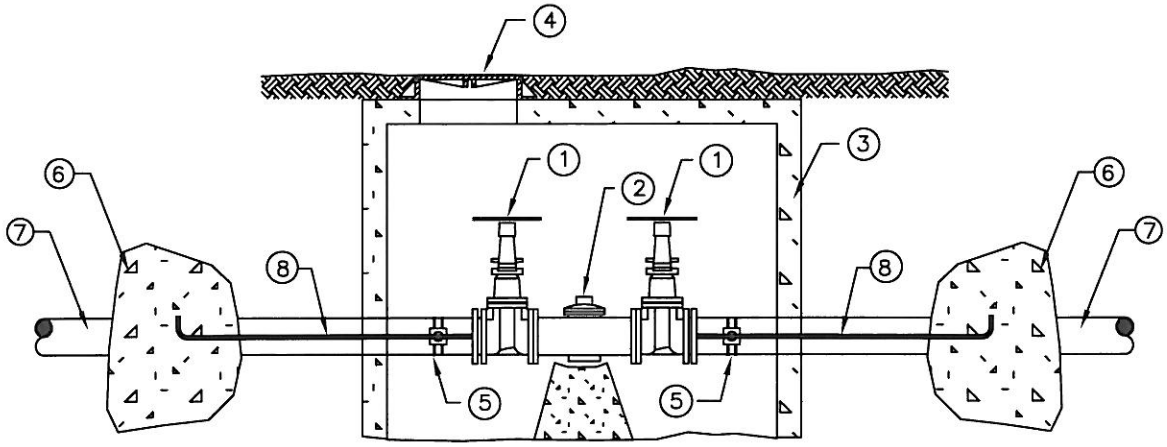

SECTION

NOTES

1. 2 GATE VALVES– MJ X FL
   (OS&Y VALVES FOR FIRELINE USAGE)
2. WATER METER–(3" TO 10") TYPE AND SIZE AS REQUIRED
   (SUPPLIED BY THE CITY OF BLAINE) CUBIC FEET
   READING
3. PRECAST CONCRETE VAULT (SIZE AS REQUIRED)
4. 24" ALUMINUM MANHOLE RING AND COVER (SUPPLIED BY THE CITY)
   MARKED " WATER" ON LID
5. 2 SERVICE SADDLES AND 1" CORPORATIONS (3" METER ONLY)
   OR 2" (OPTIONAL OR PERMANENT) BYPASS (OVER 3" METERS)
   CONSISTING OF
   2–2" TAPPING SADDLES
   2–2" GATE VALVES FL X FL
   2" GALV. PIPING (AS REQUIRED)
6. VALVES BE RESTRAINED (TIE RODDED) TO THRUST BLOCKS
   POURED OUTSIDE OF VAULT
7. PIPING–4" MIN. D.I. PIPE
   (FOR 3" METERS, REDUCE DOWN FROM 4")
8. 2–3/4" DIA. GALVANIZED TRD. ROD.

NO.	REVISION DESCRIPTION	PREP'D BY	DATE	APPROVED
	PREPARED FOR STD. MANUAL	SCP	2/14/96	

3"–10" METER INSTALLATION DOMESTIC & IRRIGATION

CITY OF BLAINE
DEPT. OF PUBLIC WORKS

SIZE	PREV. DWG NO.	PUBLIC WORKS DRAWING NUMBER	
A		6–34	
SCALE NONE		SHEET OF	REV. NO.

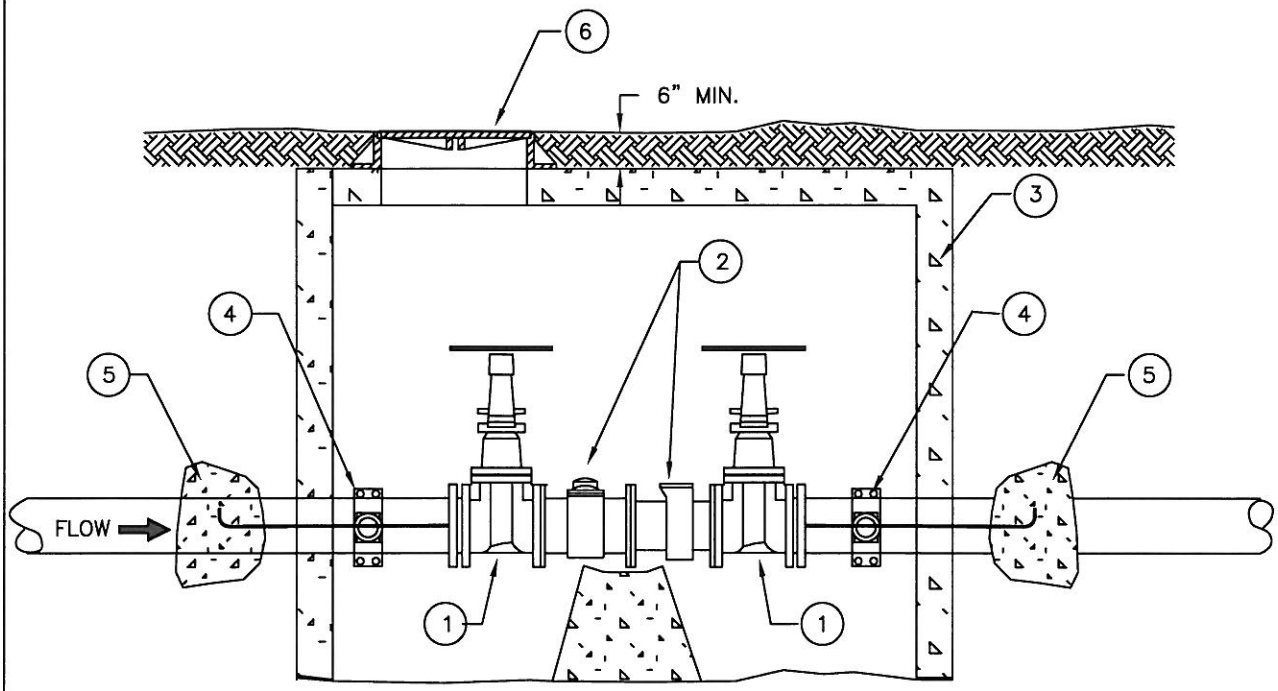

ELEVATION

GENERAL NOTES

1. 2 GATE VALVES– MJ X FL, OS&Y
2. 3"–10" TURBINE METER WITH STRAINER, READING IN CUBIC FEET
3. PRECAST CONCRETE VAULT, SIZED AS REQUIRED.
4. OPTIONAL BYPASS–2 SERVICE SADDLES AND 1" CORPORATION STOP (FOR 3" METER) OR 2" CORPORATION STOP (FOR METER OVER 3").
5. VALVES TO BE TIE RODDED OUTSIDE OF VAULT.
6. ALUMINUM MANHOLE FRAME & LID, MARKED "WATER"
7. ALLOW 5 PIPE DIAMETERS OF STRAIGHT RUN BEFORE AND 2 PIPE DIAMETERS AFTER THE METER BEFORE PLACING ANY BENDS.

NO.	REVISION DESCRIPTION	PREP'D BY	DATE	APPROVED
	PREPARED FOR STD. MANUAL	SCP	2/14/96	

3"–10" DOMESTIC & IRRIGATION TURBINE METER INSTALLATION

CITY OF BLAINE
DEPT. OF PUBLIC WORKS

SIZE	PREV. DWG NO.	PUBLIC WORKS DRAWING NUMBER	
A		6–35	
SCALE NONE		SHEET OF	REV. NO.

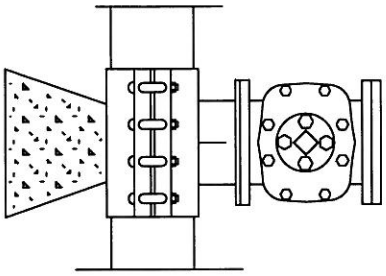

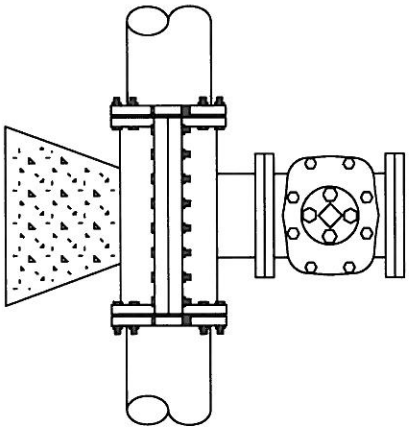

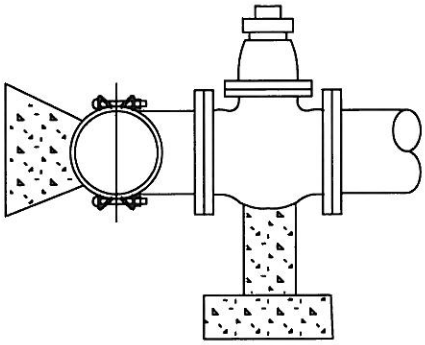

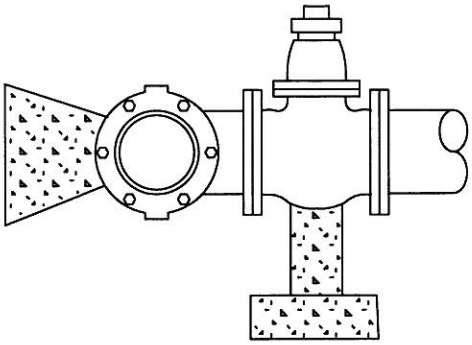

CAST IRON TAPPING TEE
MECHANICAL JOINT SLEEVE

INSTALLED ON ASBESTOS CEMENT PIPE
CAST IRON PIPE AND DUCTILE IRON PIPE

NOTES

1. STAINLESS STEEL TAPPING TEES SHALL HAVE FULL CIRCLE SEAL.
2. STEEL TAPPING TEES SHALL BE EPOXY COATED.
3. ALL TEES AND VALVES TO BE WATER TESTED BEFORE TAP.
4. NO SIZE ON SIZE TAPS. TAPS SHALL BE AT LEAST 2" SMALLER DIAMETER THAN THE EXISTING MAIN.

NO.	REVISION DESCRIPTION	PREP'D BY	DATE	APPROVED
	PREPARED FOR STD. MANUAL	SCP	2/15/96	

TAPPING TEES

CITY OF BLAINE
DEPT. OF PUBLIC WORKS

SIZE	PREV. DWG NO.	PUBLIC WORKS DRAWING NUMBER	
A		6-36	
SCALE NONE		SHEET OF	REV. NO.

CHS ENGINEERS, LLC

January 25, 2010

Department of Health
Northwest Drinking Water Operations
20435-72nd Avenue South, Suite 200, K17-12
Kent, WA 98032-2358

Attn: Mr. Richard Rodriguez and Mr. John Thielemann, P.E.

RE: City of Blaine
Comprehensive Water System Plan – Response to Comments

Dear Mr. Rodriguez and Mr. Thielemann:

I am writing on behalf of the City of Blaine in response to your letter dated October 22, 2008, which presented your comments to the City of Blaine's Comprehensive Water System Plan (WSP). We have reviewed the items in your letter and are providing the following responses which have been numbered to correspond to your comments. We believe we have made the appropriate changes and have provided all of the additional information that you have requested.

General

1. This WSP provides specific analysis, summary, evaluation and recommendations to the City in regard to the need for capital improvement projects as anticipated to meet the forecast demand during the six-year planning period. In addition, this plan documents and makes recommendations regarding system operation and management. The plan does recognize that the meeting the forecast demand will require improvements within the system within the initial six-year planning period and that additional water rights will be necessary approaching the end of the initial planning period. Completion and approval of this plan is an important step for the City and the Department of Ecology in the consideration of pending applications for additional water rights. The City, in cooperation with Birch Bay Water and Sewer District, is actively pursuing approval of three City and one District water right applications for additional groundwater resources through the DOE Cost Reimbursement Program. These additional resources will be jointly utilized to meet the needs of both water systems.

   The City believes the commitment to complete improvements within the planning period is spelled out in this plan, as with any other purveyor's plan. Specific deficiencies are identified in this plan and then prioritized into a Capital Improvement Plan. In addition to prioritizing the necessary improvements, the Capital Improvement Plan also includes budgetary costs with annual tabulations.

The City and District have amended their water supply contract and have implemented a regional capacity charge which is being collected by both purveyors starting as of January 2009. Revenue from this charge in each system is being directed to the City for implementation of source and transmission main projects that benefit the City system as a whole and the District as a significant wholesale customer.

The City is also aware that growth projections and improvement planning are based on best available information. This plan includes revised forecast water use for its largest wholesale customer and further discussion of the demand versus Capital Improvement Plan is presented below. The growth forecasts were prepared in a period of more robust economic times. The forecast growth rates have not been revised downward, providing an additional measure of contingency in anticipation of actual need for increased capacity throughout the system.

2. The City understands this comment boils down to acknowledging that if additional water rights are not secured, the City may not be able to withdraw water at the full capacity of the City's wells. The City agrees in part that acquiring additional water rights is key in the full use of all existing and proposed wells. However, these limitations do not preclude the City from completing the construction of additional source or transmission projects in anticipation of acquiring additional rights. Before each project is initiated the City will review status and risk of investment in such improvements, based on then-current information. The revised plan includes update of efforts to secure additional water rights and additional cautions about the potential constraints on securing additional supply, where additional capacity and rights are discussed. Chapters 3 and 4 have been revised to provide a current summary of current and planned near-term well capacity enhancements, in the context of existing and anticipated water rights.

3. In general the capital improvement plan (Chapters 3 and 8) implicitly indicate the number of connections the system can serve, following each year's projects – that is to say that with completion of the recommended improvements, the system will be capable of serving the forecast number of connections for that year as presented in Chapter 2.

   As noted in response to Comment #2 above, the revised plan includes an update of +the efforts by the City to obtain additional water rights and additional cautions about constraints regarding additional water rights.

   As described in the agreement with Birch Bay Water and Sewer District (see Appendix B), each system shares in short and long-term supply limitations.

   If the described efforts are not successful in timely additional water rights, the City will continue working with the District to jointly secure additional water supply,

including consideration of additional water conservation, water reuse and surface water sources.

4. An Executive Summary has been prepared, including a summary of the capital improvement plan.

5. Your comment is noted and the WSP has been screened and updated for consistency.

Chapter 1

6. A signed copy of the Consistency Checklist provided by Whatcom County and a signed copy of the same from the City Planning Department are included in Appendix N and referenced in Chapter 2 (see 2.2.1). Due to recent change in the Blaine UGA, an update of the County checklist is warranted. We have concurrently requested this update with a resubmittal of the WSP to the County.

7. The City will submit a Declaration of Water Service Area to the County to meet the requirements for an expansion of the previously declared WCCWSP service area boundary. To the best of the City's knowledge there are no service area conflicts which would impact this declaration. This declaration will be made concurrently with the submittal of the final WSP, following agency review of this submittal. Sections 1.3.1, 1.5, 1.11, 2.2.1 and Figure 1.3 have been revised to respond to Ms. Osborn's comments.

8. The BBWSD 2009 WSP has been added to the list of references.

Chapter 2

9. During summer of 2007, the updates to City of Blaine's WSP and the Birch Bay Water and Sewer District's (BBWSD) WSP were being performed simultaneously. As you are aware CHS Engineers represents both purveyors and during this time demand information was cooperatively being shared between the City and the District. The City obtained a set of demand projections from BBWSD in mid-2007 and these values were the input into the City's tables. After receiving comments from DOH in May of 2008, BBWSD provided the City with a set of revised demand figures. These numbers were subsequently input into the City's plan. It is these revised numbers which are in the copy of the July 2008 plan.

   In revising their plan later in 2008, BBWSD updated their demand forecast, and these numbers have been reflected in the City's revised plan submitted herewith. The District's figures are noted as annual average demand figures as projected by the District, with peaking impacts on the City system determined from City-wide peaking factors, which are somewhat lower than the factors used by the District, as discussed in the City plan. Tables 2.4, 2.8, 2.9 and 2.10 have been updated as

appropriate. See BBWSD WSP Table 2.12 to compare ADD figures for years 2009-2014 with the ADD figures in the Blaine WSP Tables 2.4 and 2.8. The figures used for BBWSD ADD include an allowance for distribution system leakage in the District's system.

10. See response to Comment #9 above.

11. The City's historical source records were reviewed to determine the projected ADD to MDD ratio at the City's source of supply. In utilizing the peak day source records, all customer usage (including the District's) was considered to use a value representing a single system maximum day demand. In doing so the City's ratio of ADD to MDD was determined to be approximately 2.00. Although the ADD to MDD ratio of BBWSD is reported at 2.20 in their 2009 WSP, when the District's demands are combined with the demands of the entire City, the entire system ratio is 2.00 as stated. The schedule for improvements ahead of demand has been reviewed and updated where appropriate.

    It should be noted that the ADD to MDD ratio used in the hydraulic modeling included an escalated value for West Blaine. This increased value represents the observed abnormally high peak season irrigation usage in western Blaine (Semiahmoo community) .

Chapter 3

12. The names of major roads have been added to the base maps in the figures throughout the plan.

13. Text has been added as requested regarding Well #8 use and capacity.

14. There has been limited water quality testing on Well #8.1 but arsenic was detected at the MCL and manganese was detected at a concentration slightly less than the MCL. Well #8.1 is in the same aquifer as #7 and #8 and may be subject to some of the same water quality and use limitations. Please note the depth of this well was erroneously reported as 280 ft. on page 3-21 and in Table 3.3. The actual depth of the well is 760 ft. and the screen is placed at 280 ft.

15. Well #9 is scheduled to be online in 2010. The text on page 3-14 has been revised.

16. Figures 3.1 and 3.2 have been revised to show all active or pending wells. It has been recommended in the text that the City meet with DOH after the completion of the WSP process to complete items and provide missing information in the Department of Health's database.

17. Table 3.3 has been amended to show the drilled depth of the well. The Table also now references Appendix F which provides various information in regard to each of the City's wells such as screened depth, static water level etc.

18. The appropriate language in regard to status of DOH approval of these wells has been added to Sections 3.3.1 and 3.4.1.

19. Table 3.4 has been deleted but well designations have been changed as requested where appropriate in the plan. See new Table 4.7 for presentation the key information previously included in Table 3.4.

20. The text of Section 3.3.1 has been amended as requested.

21. The replacement and upgrade of BPS #4 has been completed. This project has been removed from the referenced tables and projects have been renumbered.

22. Text has been added to Chapter 3 recognizing this near-term need but suggest deferral of the project pending recent changes in the adjacent Blaine UGA and the potential for study of options for Birch Bay Water and Sewer District and the City to meet their respective facility needs in the Birch Point Area with combined facilities.

Chapter 4

23. Acknowledged.

24. The District's (now) five interties are shown on Figure 3.1 and Chapter 4 text has been revised accordingly.

25. The text has been revised to clarify that the water rights applications are still being reviewed.

26. The text has been revised to discuss the recent action with DOE through their cost reimbursement program to expedite water right review.

27. The text has been revised for consistency with respect to timing of need for additional water rights.

28. See response to Comment #26 above.

Chapter 5

29. Update of the WHPP is now recommended for 2011 and is shown in the CIP in Chapter 8.

Chapter 8

30. The text has been revised to include project ID numbers as requested.

31. The text and project ID numbers have been revised and included where appropriate.

32. The figures have been reviewed for consistency with Tables 8.1, 8.2 and 8.3 and revised where appropriate.

Chapter 9

33. The City has been working with a financial consultant (FCS Group) to review the City's rate structure and the City's connection fees. A forecast water utility budget from that process is included in Chapter 9. The goals of the financial review were as follows:

    a. Evaluate Water Utility Financial Needs
    b. Establish Fiscal Policy Framework
    c. Develop Cast-based Water Rates
    d. Update Water General Facilities Fee.

    Through the financial review process presentations were made to the City Council to assist them thought their budget review process. In addition, the main points of the Comprehensive plan, including the complete Capital Improvement Plan were also presented to Council for review.

    Therefore, City believes their commitment to completing the necessary improvements is evident by the financial planning which has been done. However, changes in growth patterns and the financial revenues generated by the Water Utility could ultimately dictate the need for and timing of certain capital projects.

Miscellaneous

34. The recently signed amendment has been included in Appendix B.

35. A public meeting per WAC 246-290-100(8) was held in March 2008. The plan will be presented to the Council and public again following DOH review of the attached revised plan.

36. The Plan was presented in draft form to the City Council in March 2008. It will be presented for adoption following DOH review of the attached revised plan.

37. As per the Table 1.1 copies of the plan were distributed to local agencies and water purveyors for review. Letters accompanying the plans asked that comments be sent directly to Richard Rodriguez with copies provided to the City. No written responses have been received by the City or CHS, with the exception of those from Whatcom County Planner Erin Osborne. Minor revisions were suggested by Birch Bay Water and Sewer District staff and such have been incorporated in this plan. Concurrently with this submittal to DOH, the plan has been resubmitted to Whatcom County, Birch Bay Water and Sewer District and Bell Bay Jackson Water Association.

Thank for your comments. We trust that the revisions and responses noted above will support timely review and approval of the Blaine Water System Plan by your office. The City is actively pursuing additional water rights with DOE through their cost-reimbursement program and we understand that an approved comprehensive water system plan is a key criteria in the review and approval process. Therefore we would appreciate your attention to this review at your earliest opportunity. Please contact me if you have further questions.

Sincerely,
CHS Engineers, LLC

Rodney Langer

Rodney Langer, P.E.
Project Manager

Enclosures

Cc: Steve Banham, P.E., City of Blaine

CHS ENGINEERS, LLC

January 25, 2010

Richard Rodriguez
Department of Health
NW Drinking Water Operations
20435 72nd Ave S, Suite 200, K17-12
Kent WA 98032-2358

RE: City of Blaine - Comprehensive Water System Plan

Mr. Rodriguez:

On behalf of the City of Blaine we are enclosing for your review three copies (including only one Appendix) of the City's revised 2009 Comprehensive Water System Plan. The City Council has previously reviewed the plan and has authorized the plan be distributed to DOH and other agencies for final review. The City held a public hearing at the time they considered this plan, and final adoption will be considered at a public meeting. Upon receipt of comments from DOH and other agencies the plan will be further revised if necessary and the City will then consider the plan for final adoption. The City anticipates no further revision except in response to agency comments. The City has issued a SEPA threshold determination following review of a checklist prepared for adoption of the plan.

This revised plan is also being submitted to Birch Bay Water and Sewer District, Bell Bay Jackson Water Association and Whatcom County. A previous draft was submitted to the County Health Department and Fire Marshall. No comments were received from those parties so this plan has not been resubmitted to them. A final copy will be made available. See attached submittal letters.

Your comments on the previous draft are addressed in a separate letter submitted herewith.

If you have any questions regarding this revised plan or require additional information, please contact me at (425) 637-3693. I look forward to hearing from you.

Sincerely,
CHS Engineers, LLC

Rodney, Langer, P.E.
Project Manager

enclosures

c: Steve Banham, P.E., Public Works Director, City of Blaine
Roger Brown, Birch Bay Water and Sewer District
Erin Osborne, Whatcom County Planning and Development Services
Merwin Bay, Bell Bay Jackson Water Association

12507 BEL-RED ROAD SUITE 101 BELLEVUE, WA 98005-2500 TEL (425) 637-3693 FAX (425) 637-3694

City of Blaine Comprehensive Water System Plan

November 2009

Summary of Update of Appendices

A – Replaced Water Facilities Inventory with 2009 form

B – Added First Amendment to Wholesale Water Supply Contract between Blaine and Birch Bay Water and Sewer District, and Sweet Road Water Association Interlocal Agreement

C – (no changes)

D – Replaced Public Works Fee Schedule with 2009 version

E – Replaced Water Quality Report with 2008 version

F – Added Draft Groundwater Monitoring Plan

G – (no changes)

H – Replaced storage volume calculations with updated version for current planning period

I – Replaced hydraulic modeling information with revised analysis results

J – (no changes)

K – Replaced 2007 plan with 2008 version

L – (no changes)

M – (no changes)

N – Added comment letters and responses, consistency checklists and SEPA DNS

CHS
CHS ENGINEERS, LLC

January 25, 2010

Erin Osborn
Whatcom County Planning and Development Services
5280 Northwest Drive
Bellingham, WA 98226-9013

Subject: Comprehensive Water Plan – City of Blaine

Dear Erin:

Enclosed is a copy of the City's Comprehensive Water Plan (WSP) for your review and comment. This plan updates the July 2008 Comprehensive Water System Plan previously provided for your review. The City anticipates adopting this plan in 2010, following review by the State Department of Health.

An updated copy of the appendices volume has not been provided, but the attached summary notes which sections have been revised. Any portion or a full updated copy of the appendices volume is available on request. Once the plan is adopted by the City and approved by the State DOH, we can provide a complete copy.

In response to your letter of October 6, 2008 to this office, please note that the City has not yet officially declared a revised water service area. They plan to do so once the attached plan has been reviewed by the State DOH and final comments are received. We will be in touch with your department later this year to complete the water service area change and notice process.

In response to your letter of October 13, 2008 to this office, we have made the following revisions, corresponding to your letter's numbered comments:

1. The WSP has been revised to include more specific history of the assumption of the Sweet Road Water Association. (See revised Section 1.3.1 and addition to Appendix B (attached for your information).
2. The requested revision has been made to Section 1.11.
3. The requested clarification has been made to Section 1.11.
4. The correct pipe sizes are now shown on both referenced figures.
5. The 2008 plan, and, as of this writing, anticipated 2009 plan is now referenced in Section 1.5.
6. The correction noted at page 2-8 has been made.

We have shown and referenced the revised Blaine Urban Growth Area and surrounding land use and zoning changes as recently adopted by the County. The UGA change likely renders the Local Government Consistency Review Checklist that you completed on October 14, 2008 as out of date. Attached is an updated checklist for your completion. Please note that only the first item in the checklist is of concern so we trust that you can readily provide an updated checklist. Due to the large size of the UGA,

and that much of the Blaine UGA is actually in the Birch Bay Water and Sewer District water service area, the growth projections and other matters considered on the checklist do not change with the UGA revision.

Thank you for your comments and coordination on the City's water system planning process. Please contact the City or me if you have any questions.

Sincerely,
CHS Engineers, LLC

Rodney Langer

Rodney Langer, P.E.
Project Manager

Enclosure

cc: Steve Banham, P.E., City of Blaine
Richard Rodriquez, Washington State Department of Health

City of Blaine Comprehensive Water System Plan

November 2009

Summary of Update of Appendices

A – Replaced Water Facilities Inventory with 2009 form

B – Added First Amendment to Wholesale Water Supply Contract between Blaine and Birch Bay Water and Sewer District, and Sweet Road Water Association Interlocal Agreement

C – (no changes)

D – Replaced Public Works Fee Schedule with 2009 version

E – Replaced Water Quality Report with 2008 version

F – Added Draft Groundwater Monitoring Plan

G – (no changes)

H – Replaced storage volume calculations with updated version for current planning period

I – Replaced hydraulic modeling information with revised analysis results

J – (no changes)

K – Replaced 2007 plan with 2008 version

L – (no changes)

M – (no changes)

N – Added comment letters and responses, consistency checklists and SEPA DNS

INTERLOCAL AGREEMENT

Whereas, the City of Blaine, a municipal corporation of the State of Washington, hereinafter referred to as City, has the authority to enter into this agreement, and

Whereas, the Sweet Road Water Association, a private water association operating under the laws of the State of Washington, hereinafter referred to as Association, has the authority to enter into this agreement, and

Whereas, the City and the Association have entered into several agreements and amendments, since July 12, 1971, whereby the City through the Association did provide water to members of the Association, and

Whereas, the agreements have always stipulated that, at the time of the final payment of the loan secured by the Association from the Farmer's Home Administration, paid over the years in a ratio of 49.2% by the Association and 50.8% by the City, whether paid off at the end of, or earlier than, the prescribed 40 year term, then the City would assume ownership of all installed water mains from the Association for the payment of $1.00 to the Association by the City, and

Whereas, the City and Association recognize that the cost to the City is greater to provide full water utility service to customers living outside the City limits than to customers living inside the City limits, and

Whereas, the City and the Association desire to execute an early pay off of the Farmer's Home Administration loan, and transfer ownership, comprehensive planning, and maintenance support responsibility to the City,

Now Therefore, the parties agree as follows,

The City agrees to pay the Association the sum of approximately $22,759.84, the City's share of the remaining balance on the Farmer's Home Administration loan, and

The City agrees to pay the Association $1.00 as payment for ownership of all water mains, and

The City agrees to provide all services to Association members the same as the City provides to all other water utility customers of the City living outside of the City limits, including Water Comprehensive Planning as required by the State of Washington and Whatcom County Coordinated Water System Plan, and

The City agrees to provide service to approximately 25 customers, at current published charges, who have been waiting at this time for confirmation of water availability prior to securing a building permit from Whatcom County, and

The City agrees to notify the State and the Whatcom Water Utility Coordinating Committee that the City will be assuming sole responsibility for water service in the area served by the Association, and

The Association agrees to submit the City's portion of the loan pay off, along with the Association's portion of the loan pay off, to the Farmer's Home Administration, and

The Association agrees to accept payment of $1.00 as just compensation for the water mains and transfer ownership of said water mains, along with related easements, to the City, and

The Association understands, that at this time, the monthly fee paid to the City by customers living outside the City limits for water consumption is 1.5, one and a half, times the rate paid by customers within the City limits.

The Association agrees that its members shall become water utility customers of the City the same as all other water utility customers of the City living outside of the City limits, including payment of service connection fees and water rates as adopted from time to time by the City, and

The Association agrees that future hookups will be made by the City in conformance with regulations imposed upon the City by the State and the Whatcom County Comprehensive Water System Plan and as amended in the future, and

The Association agrees to notify the State and the Whatcom County Water Utility Coordinating Committee that the City will be providing water service to the area served by the Association and that the Association ceases to exist.

The City and Association agree that the City will assume loans held by the Association to its Behme Road Customers in the amount of approximately $2,677.44 each, the City paying the Association $1,000.00 each, said customers agreeing to sign a promissory note to the City thereby transferring their loan to the City.

Executed this 16 day of November, 1992.

For the Association: For the City:

Joe Silvia
President

Patrick T. Floyd
City Manager

Nadine MacArthur
Secretary

Janet Brand
for: City Clerk

CITY OF BLAINE SEAL OF CLERK WHATCOM COUNTY STATE OF WASHINGTON

Approved as to form:

City Attorney

docid: SWRD2101

Vol: 290 Page: 738
File No: 9212280124

CITY OF BLAINE

CITY COUNCIL MINUTES

November 9, 1992

CALL TO ORDER

Mayor Gloria Hagen convened the regular meeting of the Blaine City Council to order at 7:04 p.m.

Pledge of Allegiance

ROLL CALL

Councilmembers Present: Mayor Gloria Hagen; Tom Burton; Georgia Gardner; Janet Hansen; Jeanne Nelson; Alma Wagner; and David White.

Staff Present: Matt Elich; Patrick Floyd; Donna Hanson; Butch Hinchey; Shirley Thorsteinson; Tory Tjersland.

AUDIENCE COMMENTS -- COMMUNICATIONS

Richard Sturgill, Acting Transit Planner, 1218 - 12th St., Blaine, Wa.

Mr. Sturgill announced to Council that the bicycle path along Marine Drive was granted its funding through COG. A copy of a letter that was written to Whatcom County Council was given to Council for their approval; this letter requested funds for the bicycle paths and walking trails along Drayton Harbor which is in the county.

Robert Griffith, Whatcom County Council of Governments

He spoke about other projects submitted to DOT for transportation enhancements. Approximately $100,000 will be sent to the City and the City is obligated for matching funds of 20% for the bicycle paths. A Birch Bay trail was also funded which will tie in nicely with the future bikeway plans.

Council approved Richard's letter to be sent to the Whatcom County Council.

Mayor Hagen introduced new persons in the audience:

Don Wick, 9138 Gleneagle Drive - Mr. Wick was here to inquire about the necessity of requiring installation of automatic fire sprinklers. He was told that this would be discussed at the public hearing on November 23rd.

Dan Wick, 9141 Gleneagle Drive

Steve McClure, Blaine Banner

CONSENT AGENDA

Councilmember Burton requested to pull Item No. 4 from the Consent Agenda.

Councilmember Gardner requested to pull Warrant No. 3304.

MOTION BY HAGEN, SECOND BY NELSON TO ACCEPT CONSENT AGENDA WITH THE EXCEPTION OF ITEM 4, APPROVAL OF PUBLIC HEARING FOR NOVEMBER 23RD RE: EAST BLAINE ANNEXATION AND REZONE AND WARRANT NO. 3304.

Approval of Bills - Warrant Nos. 3213 - 3340, amount: $239,801.65, less $530.78.

Approval of Payroll - Warrant No. 1666 - 1829, amount: $255,676.97.

Approval of Council Minutes for October 26, 1992.

Approval to set public hearing for November 23rd requiring installation of automatic fire sprinklers in all new construction and remodels exceeding 4999 square feet.

Approval of Agreement for Probation Services.

Approval to accept minutes of Special City Council meeting of November 2, 1992.

MOTION PASSED.

Councilmember Burton referred to his objections to the proposed public hearing for the East Blaine Annexation and Rezone on November 23 and read to the Council the RCW's, Objectives of the Boundary Review Board under 36-93-180 and to show how many of the ten guidelines that the RCW's give that this annexation will meet, as follows:

1. Preservation of natural neighborhoods and communities; -- well, it's obvious it doesn't do that.

2. Use of physical boundaries, including but not limited to bodies of water, highways and land contours -- it does not do that.

3. Creation and preservation of logical service areas - well, it's in our service area so you just can't really argue with that one.

4. Prevention of abnormally irregular boundaries; and this is the one that the Boundary Review Board has called us on before and it certainly doesn't meet that criteria.

5. Discouragement of multiple incorporations of small cities and encouragement of incorporation of cities in excess of ten thousand population in heavily populated urban areas; that rule doesn't apply.

6. Dissolution of inactive special purpose districts - really doesn't apply.

7. Adjustment of impractical boundaries; well it doesn't meet that criteria because it does set up an irregular or impractical boundary.

8. Incorporation as cities or towns or annexation to cities or towns of unincorporated areas which are urban in character; this is certainly not that --- it is an extremely rural area, so that will not apply.

9. Protection of agricultural and rural lands which are designated for long term productive agricultural and resource use by a comprehensive plan adopted by the county legislative authority -- and that item we all know that that land out there in the East Blaine Annexation is rural and is zoned rural and has been zoned rural and got even more stringent controls than in 1986. So this parcel is not going to meet six of the nine objectives of the Boundary Review Board. Why are we even considering this? Hopefully, we need to short-circuit this thing right now, be willing to serve utilities out in that area which would be for the long term benefit of both that proposal and ourselves and not be so greedy and so eager to incorporate more and more areas within the City of Blaine which is a loss for us. So I don't think that we really need to go through with this public hearing; we know that it's not going to pass and we know we can do better if we just will be willing to serve our utilities to these areas and not attempt to continuing to incorporate them in the city boundaries.

MOTION BY BURTON, SECOND BY GARDNER NOT TO ALLOW PUBLIC HEARING FOR NOVEMBER 23RD FOR THE EAST BLAINE ANNEXATION AND REZONE.

Mayor Hagen asked Attorney Elich if a public hearing has to take place. Mr. Elich responded by stating that the law requires that once an application has been submitted and given prior approval a public hearing is mandatory.

Mr. Elich also requested that whatever was stated here tonight be made part of the public hearing for review.

MOTION BY BURTON AND SECOND BY GARDNER WITHDRAWN.

Councilmember Gardner referred to Warrant No. 3304 and objects to it being coded under "Professional Services" rather than "Meals".

Patrick Floyd stated that this was an error and will be corrected.

MOTION BY GARDNER, SECOND BY HANSEN THAT APPROVAL BE GIVEN TO PAYMENT OF WARRANT NO. 3304 IN THE AMOUNT OF $530.78 WITH ITS PROPER CODING. MOTION PASSED.

MOTION BY WAGNER, SECOND BY HANSEN TO SET PUBLIC HEARING OF EAST BLAINE ANNEXATION ON NOVEMBER 23RD. MOTION PASSED.

PUBLIC HEARINGS

A Public Hearing sign-up sheet was made available to the public indicating their pro or con preference and indicating whether they wished to speak.

Proposed Amendment of Parking Regulations at Section 17.58.210 to increase the maximum allowable amount of parking for compact cars.

Staff recommendation is to amend the regulations at Section 17.58.210 to allow a ratio of one to two for compact parking spaces for residential uses. This is consistent with observed local demands. Maintain current minimum dimensions for parking spaces. The amount of property saved by reducing the spaces to the smaller standards used elsewhere would be significant only in every large developments.

THE PUBLIC HEARING IS DECLARED OPEN.

There was no one wishing to speak on this topic.

The Public Hearing is declared closed.

1993 Budget

THE PUBLIC HEARING IS DECLARED OPEN.

There was no one wishing to speak on this topic.

Budget Hearing is continued to November 23, 1992.

REPORTS OF ADVISORY COMMITTEES

Airport Commission -- Don Nelson

Don Nelson: Thank you. Once again the Commission hasn't met since your last couple of meetings. However, they will meet this Thursday at 8:00 a.m. here in the morning. I am please to report that with absentee ballots counted today the present position of

the vote on the abolishment of the airport is failing at 46% for abolishment and 54% against. Of the absentees counted today they went in favor of keeping the airport at 62% to 38%. There are still some out there; they'll count the final ones on the 17th. However, I would presume there won't be too many back and I hardly can see how they could change it although I guess numerically it's possible.

Mayor Hagen: Mr. Nelson, how many were counted today?.

Don Nelson: I believe there were 63 counted today. I had heard there were 153 out but it seems kind of incredible that only 63 of 153 have come back by now, but maybe that's possible. There's an 80-vote spread now and I guess there could be 90 ballots out yet, but doesn't seem like it could change it now. So, I'm ready to declare the airport the winner.

Don Nelson: I am concerned about the committee to abolish the airport, the final mailer that they sent out. There is a lot of misleading statements in this mailer that it would seem must have come, information must have come out of City Hall here somewhere. Now whether that's staff or Council or just somebody misinterpreting what they read -- I don't know. But they talk about one thing about the people getting airport hands out of their pockets and they say that they are, the people are paying for Airport Manager's salary and insurance and maintenance and electricity and interest on airport debt. And they include paying for the Bellingham Airport. Well of that list the only one that's true, to my knowledge, is that, yes, we are paying for the Bellingham Airport with taxes. But airport income pays for all of those other things. They also stated that money collected by the Airport from all sources has not covered expenses this year. Now they have had to research here somehow to get that information. I would hope they just didn't pick it out of the air and make a statement like that. But according to the new printout that I have airport revenue this year so far exceeds expenses by $10,000 and a month ago it was by $9,000 and that's increased another $1,000 this month. So I guess that's a $1,000 a month; of course, we may spend that money yet before the year's over but so far this year we're well exceeding expenditures with revenues.

Mayor Hagen: I guess we appreciate that, Mr. Nelson, but I don't really don't know that the Council --------

Don Nelson: Well, I'm going to get to the point on that and they've also made promises, or made statements in this thing, that the airport is not providing shuttle services to the San Juans, not providing air freight, not providing charter service, and so on. These things are all totally untrue. We are providing those services out of this airport. And then finally they say, don't be mislead, abolish the airport. What I'm getting at is that it seems to me that this is somehow or other unfair campaigning and I would like to ask that the City Attorney

look into whether or not this is legal -- whether they can make mistakes. Maybe it's moot since we've won but what if the vote had gone against us, would this be the basis for a challenge of the vote?

Mayor Hagen: I don't know, maybe Mr. Elich could look into that.

Don Nelson: I would appreciate it. We already have the attorney looking into the matter with the Attorney General, you know, whether or not those funds have to be paid if the airport is closed. I think that's still information that should come out and I would like to see that pursued.

Mayor Hagen: What kind of coverage was this mailer? Do we know? Did it go to all, everybody in Blaine or do we know? Was it actually mailed?

Don Nelson: It was mailed. This is one that my son received. I did not receive one.

Mayor Hagen: I guess I would say that if this is general information that's out and if it's false I would like to see maybe in the newsletter something, some kind of correction. I don't think we want people to believe something that isn't so. If it's something that's open to interpretation then I think we'll just have to let everybody interpret as they choose. But if there is false statements in there, then I think they need to correct it.

Councilmember Wagner: I don't know, but I think they used the voter's list and I think they left out people like Don Nelson and myself because they know where we stood. But my son got one.

Councilmember Gardner: I didn't get one, I feel left out.

Mayor Hagen: I didn't either, maybe none of the Council members got one.

Councilmember Wagner: I see their idea of taking that and a rebuttal in the newsletter might have some value because I do hate to see lies continued.

Mayor Hagen: I think if it is interpretation, then I think that that's something everybody chooses to interpret themselves. But if there are actual false statements then I would .....

Don Nelson: It is mailed under the heading, it says: "Paid for by Citizens to Abolish the Blaine Airport" so I assume it was that committee. Lastly I.....

Mayor Hagen: Mr. Nelson, Ms. Gardner had a comment she wanted to make, a question?

Councilmember Gardner; I think that the voters have spoken and that they want to retain the airport and I think that what we ought to do is to act positively. I think that for this Council or for anybody to decide to sort through campaign propaganda and analyze what is accurate and what is not is not only a hopeless task it's probably a waste of time. So instead of putting our energies to that, why don't we put our energies to building up the airport?

Don Nelson; I appreciate that statement. Thank you.

Councilmember Gardner: Why don't we just ignore it, all sides of it.

Councilmember Burton: I want to investigate everybody's claim

Councilmember Gardner: Oh Lord, I wouldn't have the energy.

Councilmember Burton: There is no need to get in the middle of any of it.

Don Nelson: Finally, I would like to report a matter that is coming up. We have a local citizen that is, that has sent quite a pack of information I guess to Washington, D.C. and it includes articles from the Blaine Banner and advertisements. One advertisement that was mentioned was the drawing by, again, by the citizens to abolish the Blaine Airport. It was the drawing of an airliner sticking out of the roof of our school buildings on fire. And I'm not sure what the point of that is but apparently this person, and also to continue what was in the packet. There were photographs of what the FAA officials reported to me appear to be dots in the sky but alleging low flying aircraft over Blaine. There was also a photograph of an airplane, several photographs of an airplane sitting on the ground at the Blaine airport. There was a float plane that didn't have any "N" numbers on it. Here we go again with the "N" numbers issue. There is absolutely nothing wrong with an airplane sitting on the ground on the airport with no "N" numbers on them. Perhaps there is something wrong with one flying but that might ? it's like a car running without any license plates on it. But this person is Mr. Wilkett and we talked a moment ago about wasting people's time and money with this kind of thing but I had two calls from two different people from the FFA in Seattle. This packet of information was sent from Washington, D.C. to Seattle and those people were told to investigate the allegations. I'm not sure what his point is, whether he's trying to chase the airplanes from the sky from flying over Blaine. We are on an airway between Bellingham and Vancouver and I guess we do have airliners flying over and we have small planes flying over too. But whether he's trying to eliminate that or what, I don't know, but he's causing a lot of officials, including myself, to have to spend time responding to this kind of stuff. On the 18th of this month a couple of these people will be in town and they will be interviewing me on this matter

and they presumably will be interviewing Mr. Wilkett. I think the Council should be aware of what's going on and perhaps ask Mr. Wilkett what he is after. It doesn't seem to be related to the airport but anyway. Thank you.

ADVISORY COMMITTEES

Groundwater Management Committee

Councilmember Hansen reported that this committee met on October 29th. The final issue papers are to be discussed at the next meeting. It was proposed that signs be put up in various areas to remind citizens that this is where the water comes from to deter people from polluting the area.

Drayton Harbor Watershed Program

Councilmember Hansen reported that one of the topics that was discussed was possibly forming under the county a shellfish protection district. It's a means of getting funds to protect the resources. They are also recommending to the Department of Health that they establish a low-interest loan fund so that persons with septic tanks problems can borrow money to fix them. If the City of Blaine annexes any more land they will be recommending that the critical areas and wetlands ordinance be changed as they are not strict enough to protect water quality at Drayton Harbor.

Downtown Shoreline Comprehensive Study Committee

Mayor Hagen reported on last Wednesday's imaging meeting in the Library. It will be derived from this meeting what the people of Blaine think their image should be. Another meeting won't be held until January.

OLD BUSINESS

Sweet Road Water Purchase by City of Blaine

It is recommended that Council adopt a motion to authorize the City Manager to execute the Interlocal Agreement with the Sweet Road Water Association and to pay off the City's remaining debt with the Farmer's Home Loan, approximately $22,759.84 which actions will give ownership of the water mains in that area to the City of Blaine.

Pat Floyd referred to a change made and that is the addition of the last paragraph, page 2, "The City and Association agree that the City will assume loans held by the Association to its Behme Road Customers in the amount of approximately $2,677.44 each, the City paying the Association $1,000.00 each, said customers agreeing to sign a promissory note to the City thereby transferring their loan to the City."

MOTION BY BURTON, SECOND BY HANSEN TO AUTHORIZE CITY MANAGER TO SIGN THE INTERLOCAL AGREEMENT WITH THE SWEET ROAD WATER ASSOCIATION. MOTION PASSED.

Board/Commission Applicants

It was the consensus of the Council that they will interview candidates individually.

Councilmember Hansen referred to the communication received fromChief Gary Franz and also a comment from Councilmember White about the qualifications for the Board of Appeals. She would like clarification on just what the Board of Appeals' responsibilities are and what their qualifications need to be.

Councilmember White stated he had spoken with Chief Franz about the difficulty in getting qualified persons to serve on these Boards and Commissions. Chief Franz is suggesting that we look at the ordinance and possibly go outside the area to advertise for people to sit on the Boards. Councilmember White prefers to find qualified people in this area.

STANDING COMMITTEES

Works and Utilities

Councilmember Burton reported on the following issues that transpired at the 4:00 p.m. Works and Utilities meeting:

1. Cathy Bates' request for waiver of hookup fees at vacant lot at 966 Blaine Avenue since they believe it has already been serviced with water and sewer. Leroy Dougall has been unable to find these hookups on this lot. A two-week time frame was given to Mr. Bates to find water and sewer service on property and if they are there Leroy will check to see if they are still serviceable.

2. LID #30, (Tabled 6/23/92) Water/Sewer Plan Considerations and Service Request of Doug Bates (3 Lots). Staff was instructed to rework formula in that area.

3. Karl Slotman's request for waiver of his utility accounts and late penalties at Waterside Condominiums since most of the units were unoccupied. He has accumulated an $795.00 late payment penalty and $3,491.31 utilities charges for his six units and is requested a waiver of some of these charges since the majority of them were unoccupied.

MOTION BY BURTON, SECOND BY WHITE TO RECOMMEND THAT THERE WILL BE NO WAIVER OF PAYMENTS OF KARL SLOTMAN. MOTION PASSED.

4. LID #28 - Major Street/Utility Reconstruction of Boblett and Fir Streets, south of school district. Work tentatively scheduled in 1994.

5. Post Office sent check for $84,000 to cover utility charges.

6. Request from Christina Olason for waiver of penalty fee.

MOTION BY BURTON, SECOND BY WHITE THAT A LETTER BE SENT TO CHRISTINA OLASON STATING THAT THERE WILL NOT BE A WAIVER OF THE LATE FEE. MOTION PASSED.

7. Letter from Nancy Feagin, Department of Health, regarding poor quality of running water, copy with Manager's report.

Mayor Hagen informed Council that Mr. Charles Stone contacted her regarding vacation of some of his property. Mr. Elich will summarize the details in a forthcoming memo.

Administrative/Fiscal

Councilmember Hansen reported on the following:

1. TCI Cablevision proposing another 15-year contract with a 3-1/2% increase. The committee is recommending that negotiations begin with another cable television company. Council concurred with Committee's request to submit a Request for Proposal.

Mayor Hagen will secure information from the Sumas community regarding their cable and report back to Council.

2. Business License Fees Increase -- A Committee of the Whole meeting will be held on November 23rd at 6:00 p.m. to discuss this possibility.

3. Letter from Mayor Robert Mitchell, City of Sumas, requesting input from all of the Cities regarding funding for the Health Department to construct their own building. City of Blaine is asked to contribute $1,860 to this fund.

MOTION BY HANSEN, SECOND BY HAGEN THAT LETTER BE SENT TO ROBERT MITCHELL, MAYOR OF CITY OF SUMAS, EXPRESSING REGRET THAT THE CITY OF BLAINE DOES NOT HAVE FUNDS TO COMMIT IN 1993. MOTION PASSED.

4. LID #24 - Request from Finance Department for an interim interest rate for property sales.

MOTION BY HANSEN, SECOND BY WHITE THAT AN INTERIM INTEREST RATE OF 7% BE APPROVED. MOTION PASSED.

5. Senior Center and Boys and Girls Club Plans - Staff is working to get this bonded in 1993 instead of 1994 and the staff was commended for their work.

6. Request from Finance Department to draw up an ordinance to add charge for NSF checks.

MOTION BY HANSEN, SECOND BY WHITE THAT CITY ATTORNEY DRAW UP AN ORDINANCE TO CHARGE A $20.00 FEE FOR NSF CHECKS ON ALL TYPES OF CHECKS. MOTION PASSED.

MANAGER'S REPORT

Patrick Floyd reported on the following:

1. He received a call from the DNR that day agreeing to reimburse the City 90% of the $75,000 for the Marine Center Grant, approximately $67,000. They will be doing a visual, on-site inspection December 3, at 1:00 p.m.

2. Councilmember Nelson received her copy of the city-owned property map and she was very appreciative and elated. This map was produced by Steve Pierce of Public Works.

Councilmembers were given copies of new address maps.

3. Letter from Whatcom Transit Authority acknowledging their receipt of resolution passed by the Blaine City Council on October 26, 1992, entitled "City of Blaine Proposal to the Whatcom Transit Authority". Notification will be sent regarding W.T.A. Board action on the final Plan.

FURTHER BUSINESS

The following Council meetings will commence at 6:30 p.m. in November and December, 1992 for directions regarding Union Negotiations:

November 23
December 14
December 28

Councilmember Nelson expressed her thanks to Tory Tjersland and Pat Floyd for the map.

The meeting adjourned at 8:45 p.m.

MAYOR

CITY CLERK

Washington State Department of Health

Local Government Consistency Review Checklist

A consistency review between DOH planning and engineering documents and adopted comprehensive plans and development regulations is required in certain situations. This checklist may be used to document the consistency review as required in WAC 246-290-108. A consistency review is required for each local government with jurisdiction over the applicable service area.

Water System Name: CITY OF BLAINE PWS ID: 07300 D

Planning Document Title: COMP. WATER SYSTEM PLAN Plan Date: 7/08, REV 11/09

Local Government with Jurisdiction: WHATCOM COUNTY

Consistency Statement	Page(s) in Planning Document	Yes – No – Not Applicable
The applicable service area is consistent with the land use and zoning in the adopted comprehensive plan and adopted development regulations.	1-9, 1-10, 1-12, 2-7	
For Water System Plans: The six-year growth projection used to forecast water demand is consistent with the adopted city/county's population growth projections. If a different growth projection was used, the alternative growth projection and methodology proposed is acceptable based on explanation given.	2-1, 2-8	
For Water System Plans: Provisions of water service for new service connections are consistent with the adopted comprehensive plan and adopted development regulations.	1-12	
For city-owned systems only: All utility service extension ordinances regarding water service are included in the plan. These policies are consistent with the adopted comprehensive plan and adopted development regulations.	1-12	
Other relevant elements related to water supply (as determined by DOH) is consistent with the adopted comprehensive plan and adopted development regulations.		N/A
Where the local government with jurisdiction did not provide a Consistency Review: Provide documentation of efforts taken and amount of time provided. Include: name of contact, date, type of effort attempted, and response from local agency.		N/A

I certify that the above statements are true to the best of my knowledge and that these statements support the conclusion that the subject-planning document is consistent with adopted comprehensive plans, development regulations, and other policies.

_____ _____

Signature Date

_____

Printed Name, Title, & Jurisdiction

****For any issues of inconsistency, please document the inconsistency, including the citation from the comprehensive plan or development regulation. Provide direction on how this inconsistency can be resolved.****

CHS ENGINEERS, LLC

January 25, 2010

Bell Bay Jackson Water Association
7232 West 40th Drive
Ferndale, Washington 98248

Subject: Comprehensive Water Plan – City of Blaine

Ladies and Gentlemen:

Enclosed is a copy of the City's Comprehensive Water Plan for your review and comment. This plan updates the July 2008 Comprehensive Water System Plan previously provided for your review. The City anticipates adopting this plan in 2010, following review by the State Department of Health.

An updated copy of the appendices volume has not been provided, but the attached summary notes which sections have been revised. Any portion or a full updated copy of the appendices volume is available on request.

Please contact the City or me if you have any questions.

Sincerely,
CHS Engineers, LLC

Rodney Langer

Rodney Langer, P.E.
Project Manager

Enclosure

cc: Steve Banham, P.E., City of Blaine
Richard Rodriquez, Washington State Department of Health

City of Blaine Comprehensive Water System Plan

November 2009

Summary of Update of Appendices

A – Replaced Water Facilities Inventory with 2009 form

B – Added First Amendment to Wholesale Water Supply Contract between Blaine and Birch Bay Water and Sewer District, and Sweet Road Water Association Interlocal Agreement

C – (no changes)

D – Replaced Public Works Fee Schedule with 2009 version

E – Replaced Water Quality Report with 2008 version

F – Added Draft Groundwater Monitoring Plan

G – (no changes)

H – Replaced storage volume calculations with updated version for current planning period

I – Replaced hydraulic modeling information with revised analysis results

J – (no changes)

K – Replaced 2007 plan with 2008 version

L – (no changes)

M – (no changes)

N – Added comment letters and responses, consistency checklists and SEPA DNS

CHS

CHS ENGINEERS, LLC

January 25, 2010

Roger Brown
General Manager
Birch Bay Water and Sewer District
7096 Point Whitehorn Road
Birch Bay, WA 98230

Subject: Comprehensive Water Plan – City of Blaine

Dear Roger:

Enclosed is a copy of the City's Comprehensive Water Plan, including updated appendix volume, for your review and comment. This plan updates the July 2008 Comprehensive Water System Plan previously provided for your review. The City anticipates adopting this plan in 2010, following review by the State Department of Health.

The attached summary notes which sections of the appendix volume have been revised.

Please contact the City or me if you have any questions.

Sincerely,
CHS Engineers, LLC

Rodney Langer

Rodney Langer, P.E.
Project Manager

Enclosure

cc: Steve Banham, P.E., City of Blaine
Richard Rodriquez, Washington State Department of Health

12507 BEL-RED ROAD SUITE 101 BELLEVUE, WA 98005-2500 TEL (425) 637-3693 FAX (425) 637-3694

City of Blaine Comprehensive Water System Plan

November 2009

Summary of Update of Appendices

A – Replaced Water Facilities Inventory with 2009 form

B – Added First Amendment to Wholesale Water Supply Contract between Blaine and Birch Bay Water and Sewer District, and Sweet Road Water Association Interlocal Agreement

C – (no changes)

D – Replaced Public Works Fee Schedule with 2009 version

E – Replaced Water Quality Report with 2008 version

F – Added Draft Groundwater Monitoring Plan

G – (no changes)

H – Replaced storage volume calculations with updated version for current planning period

I – Replaced hydraulic modeling information with revised analysis results

J – (no changes)

K – Replaced 2007 plan with 2008 version

L – (no changes)

M – (no changes)

N – Added comment letters and responses, consistency checklists and SEPA DNS

STATE OF WASHINGTON
DEPARTMENT OF HEALTH
20435 72nd Ave. S. , Suite 200, K17-12 • Kent, Washington 98032 -2358

Received
OCT 2 8 2008
CHS ENGINEERS

October 22, 2008

STEVE BANHAM, PE
PUBLIC WORKS DIRECTOR
CITY OF BLAINE
1200 YEW AVE
BLAINE, WA 98230

Subject: Blaine, City of PWS ID #07300 U
Whatcom County
2008 Water System Plan - Review
Submittal #08-0722

Dear Mr. Banham:

Thank you for submitting the draft Water System Plan (WSP) for the City of Blaine (the City or Blaine) received in this office on July 29, 2008. We have reviewed the plan and offer the following comments. These comments must be adequately addressed prior to approval of the WSP.

General

1. Ideally, your WSP should demonstrate that the current system has adequate source, storage, and distribution capacity to meet all projected demands during the 6-year planning period from 2009 through 2014. In this case, however, it appears that your current and near term projected demands (City demands plus wholesale customer demands) are very close to exceeding the physical capabilities of the City's sources as well as other water system facilities. In addition, it appears that the withdrawal amounts allowed under the City's existing water rights will be reached or exceeded during this six year planning period. Consequently, the draft plan identifies some significant improvements and related work that must be completed in the near term to meet the projected needs of your water system. The WSP must be further expanded to demonstrate your commitment to completing the planned improvements and to show how you will manage growth prior to their completion.

2. The WSP identifies two major source issues that must be addressed in order to support projected growth within the planning period; the current physical capabilities of the City's well sources and the withdrawal amounts allowed under the City's existing water rights. The WSP clearly identifies limitations and projects necessary to address these issues, such as the need to bring wells 5.1 & 9 on-line in 2009 and well 8.1 in 2010 (see table 8.3). However, the WSP also cautions that the full use of those wells will initially be limited by the allowable withdrawal rates contained in the City's **existing** water rights. Furthermore, the City has two applications for water rights that could add 650 gpm of additional instantaneous withdrawal from wells 1R and 2 and has recently filed five applications for additional water rights totaling 5500 gpm of additional instantaneous withdrawal (see page 4-16). However, the WSP again cautions that all of these applications are under protest by the Lummi Nation. The WSP must recognize that some of the proposed projects and water right remedies are not yet guaranteed.

3. The WSP should clearly identify the number of connections that the system can serve with its current source, storage, and hydraulic capacity. It must then identify the additional number of connections that could be served as specific projects are completed that will increase capacity. The WSP must also acknowledge the real potential that increased capacity and new incremental water rights may not be realized, or at least may be delayed and not fully available within the six year planning period. The WSP should address these possibilities and articulate how the City will manage and, if necessary, limit its growth expectations along with the source expectations of its wholesale customers.

4. It is strongly recommended that an *Executive Summary* be included to summarize the major findings and recommendations in this WSP. This section should emphasize the need for completing a considerable amount of work in the near term, which includes the following:

    - Completing several new wells and upgrading existing wells.
    - Resolving existing water right issues.
    - Obtaining additional water rights.
    - Increasing pipeline capacity for transmitting flow to Birch Bay.
    - Eliminating some low pressure areas in the 171 zone and 360 zones.
    - Replacing the chlorination and telemetry control systems.
    - Upgrading existing distribution pipelines during planned road improvements.

5. The draft WSP includes considerable discussion to describe the existing facilities, to outline applicable requirements, and to identify and justify necessary improvements. The draft document appears to be fairly well written and very well coordinated, especially given the interrelationship and complexity of the various issues. We did note several discrepancies, which are included in our review comments in hopes they will assist with completing the final document.

Chapter 1 - Description of Water System

6. The Municipal Water Legislation (MWL) requires that the water system plan must be consistent with applicable adopted local plans, regulations and policies. To that end, please provide a signed "Consistency Statement Checklist" (attached) from the appropriate Whatcom County government agencies, and from the appropriate City of Blaine official.

7. Please address the issues contained in the October 6 and October 13, 2008 letters from Erin Osborn, Whatcom County Planning and Development Services, relating to the proposed expansion of the City's water service area and other review comments.

8. Section 1.5 beginning on page 1-8 should also reference the 2008 WSP for the Birch Bay Water & Sewer District (BBWSD or Birch Bay), which is currently under development. DOH sent review comments on Birch Bay's draft plan on May 14, 2008.

Chapter 2 - Basic Planning Data

9. The projected ADD demands for Birch Bay that are listed in Tables 2.8 and 2.9 (without conservation) and Table 2.10 (with conservation) are identical and appear to be somewhat less that the projected demands in similar Tables 2.12 and 2.13 that were included in Birch Bay's draft WSP. Since it constitutes about half of Blaine's total demand, please verify that you are using the final projected demands for Birch Bay (both with and without conservation) shown in Blaine's WSP. The projected demands shown in Table 2.4 for comparison should also agree with your later tables.

10. Verify that the projected demands for Birch Bay that are shown in Tables 2.8, 2.9, and 2.10 include a realistic allowance for water loss, as determined for the Birch Bay system.

11. In Tables 2.8, 2.9, and 2.10, the total system ADD was multiplied by a factor of 2 to determine the projected MDD demands. However, Birch Bay has a considerable number of seasonal users and it appears that they used a factor of 2.21 times their ADD to determine MDD in their draft WSP. Please verify that the total system MDD demands for Blaine reflect the actual MDD demands projected for the Birch Bay system. The schedule for completing source improvement projects should also be revised as necessary.

Chapter 3 - System Analysis

12. The text in chapter three and elsewhere describes the locations of key components and pipelines relative to existing roads. It would be helpful to show the main roads on the maps and figures in these early chapters, similar to what is shown in Figures 8.1-a and 8.1-b in Chapter 8.

13. Section 3.2 on page 3-12 says that existing well 8 in Lincoln Park has arsenic at 12 ppb (which exceeds the MCL of 10 ppb), but that blended water delivered to customers is at 4 ppb. Please expand the text to indicate that well 8 has about 100 gpm capacity and is only used to meet peak demands during 5 to 6 months per year (per page 3-20). In addition, please indicate that a defined blending program must be developed if it is ever necessary to use well 8 year-around. Additional facilities may also be required to assure that water delivered to all customers is always below the MCL for arsenic.

14. Section 3.3.1 (beginning on page 3-14) indicates that you plan to replace seasonal well 7 (242 gpm with high H_2S) and seasonal well 8 (100 gpm with high arsenic and manganese) with new well 8.1 at 280 feet deep and up to 650 gpm capacity, which equals the combined pumping capacity allowed by the instantaneous water rights for these two wells. Does new well 8.1 have any water quality concerns, such as the elevated arsenic, manganese, and H_2S in the two wells it will replace? Please discuss.

15. Page 3-14 indicates that well 9 is scheduled to be on line in 2008 while page 3-20, page 3-21, and Table 8.3 say that well 9 will be brought on-line in 2009. Please clarify.

16. It appears that Figures 3.1 and 3.2 should be corrected to show well 1R, to indicate that well 1 is in-active, to show well 3R, to show whether well 3 is active or in-active, to show well 5.1, and to show well 8.1. In addition, the DOH sentry data base should be updated to show whether well 3 is active or inactive (it's currently listed as active) and to show new well 8.1.

17. On Table 3.3 on page 3-17, please indicate whether the well depths refer to the bottom of the wells, or to the top of the first open interval (which is normally how they are tracked in our DOH Sentry data base). It would be helpful to show both the total depth and the depth to the first open interval for each well.

18. It appears that complete information for source approval per WAC 246-290-130 must still be submitted for well 9 on Boblett Street and for well 8.1 in Lincoln Park. Please indicate that this information must be included with the project report and construction submittals for these new wells. It also appears that information for source approval is still needed for newer wells 1R and 3R.

19. On Table 3.4, the designation for wells 4.1 and 4.2 should be changed to well 4 and 4.1 to agree with the text on page 3-18 as well as our DOH Sentry data base.

20. The bottom of page 3-21 indicates that your current source capacity does not meet MDD and, therefore, equalizing storage is needed. Since source capacity is normally sized to meet the system MDD, the text should be revised to say that Blaine must currently provide a greater volume of equalizing storage than is normally required to make up the difference between the maximum source capacity and PHD.

21. The need to replace booster pump station #4 is discussed on pages 3-48 and 8-3. This project appears to be identified as BPS-1 on Tables 3.16 and 8.1, but it seems to be listed as BPS-2 on Table 8.3. Please clarify.

22. Tables 3.7 and 3.8 indicated that the 330/360 pressure zone is currently deficient in storage and will continue to be deficient even if source improvements are completed in the near term as currently planned. On the other hand, Table 8.3 shows that Project ST-4 to address this will not be completed until 2014. Please discuss your rationale for delaying this project.

Chapter 4 - Water Use Efficiency and Water Rights

23. We compliment the City on a very thorough, well prepared Water Use Efficiency Program.

24. Page 4-21 indicates that there are four interties with the BBWSD but only one intertie is shown on Figure 3.1. Please show all existing interties on Figure 3.1.

25. Section 4.3.1 on page 4-16 says that Blaine has obtained new water rights for wells 1R and well 2 that together allow withdrawing an additional 650 gpm, but that these water rights are under protest by the Lummi Nation. Have these water rights already been granted by DOE, or are they still in the application process? Please clarify.

26. Section 4.3.1 on page 4-16 also says that Blaine submitted 5 additional applications for new water rights to WSDOE in January 2007, which are also being protested by the Lummi Nation. Please discuss the review process and time frame required to process these water right applications. What are the chances for approval and when can you realistically expect DOE's review and approval process to be complete?

27. The second paragraph on page 4-19 projects that the current surplus of instantaneous and annual water rights (786 gpm and 783 AFY respectively) will be fully utilized by year 2010, while the text near the top of page 4-20 says that the existing instantaneous and annual water rights will last to year 2013. On the other hand, section 8.2.1 on page 8-2 says that additional instantaneous water rights are needed by year 2010 and that additional annual water rights are needed by year 2012. Please reconcile these conflicting statements and clarify when additional source capacity and water rights must be available.

28. It appears that the City is facing some significant water right related limitations that may take some time to resolve. Please describe any special steps that City is taking to obtain additional water rights. Please discuss how you will manage growth and new connections if the additional water rights are not available when needed.

Chapter 5 - Source Protection

29. A finalized and adopted WHPP is a required element of this WSP. The WSP indicates that the well head protection program (WHPP) is 12 years old and still in draft form. The WSP identifies elements of the WHPP that need to be updated and completed, yet there is no schedule for their completion, and no money has been included in the CIP to accomplish the recommended tasks. Please clarify your plans for finalizing this WHPP and include an appropriate planning type project in your CIP

Chapter 8 - Improvement Program

30. The necessary capital improvement projects are described in section 8.2 beginning on page 8-1 and then tabulated in Tables 8.1, 8.2 and 8.3. In each of the various text sections in section 8.2, please reference the associated project that is subsequently listed in the tables by the project ID number, such as SU-4 or T/D-4. This is currently done in some, but not all cases.

31. The description for project SU-4 in Table 8.1 and similar Table 3.16 says that the outcome of this study may affect projects SU-2 and T/D-1, which appear to be the wrong projects. It appears that the affected projects are described in Section 8.2.5 on page 8-4 and correctly identified in note 1 on Table 8.3. Please clarify and also add the correct project ID numbers in Section 8.2.5.

32. A summary of each individual project along with a figure is included at the end of Chapter 8. Please verify that the project name and ID number listed on each of the summary figures matches the corresponding project name and ID number that is listed in Tables 8.1, 8.2, and 8.3.

Chapter 9 - Financial Program

33. Please provide an annual pro forma operating budget for the six year planning period, 2009 – 2014. The City is proposing several significant facility, source, and water right related projects that must be completed to meet projected water demand during the six year planning period covered in this WSP (and immediately thereafter). Your financial program must demonstrate your commitment to completing these projects as well as how they will be paid for.

Miscellaneous Comments

34. Appendix B includes a copy of the 2002 agreement for wholesale supply of water to Birch Bay. Please replace this with the revised agreement that was signed in 2008.

35. The water system must meet the consumer input process outlined in WAC 246-290-100(8). Please include documentation of a consumer meeting discussing the WSP, prior to DOH approval of the WSP.

36. Prior to DOH approval, the governing body of the City must approve and adopt the WSP. (New requirement resulting from the MWL)

37. Have adjacent utilities had the opportunity to review and comment on this document, in particular, the Birch Bay Water & Sewer District?

We hope that you have found these comments to be clear, constructive, and helpful in the development of your final WSP. We ask that you submit the revised WSP on or before January 15, 2008. In order to expedite the review of your revised submittal, please include a cover letter summarizing how each of the above comments was addressed in the revised WSP and where each response is located (i.e., page numbers, Appendices, etc.)

Regulations establishing a schedule for fees for review of planning, engineering and construction documents have been adopted (WAC 246-290-990). We have included an invoice in the amount of **$3584.00** for the review of the Water System Plan. This fee covers our cost for review of the initial submittal, plus the review of one revised document. Please remit your complete payment in the form of a check or money order within thirty days of the date of this letter to: **DOH, Revenue Section, P.O. Box 1099, Olympia, WA 98507-1099.**

Thank you again for submitting your draft Water System Plan for our review. If you have any comments or questions concerning our review, please contact either of us.

Sincerely,

Richard Rodriguez
Regional Planner
(253) 395-6771

John P. Thielemann, PE
Regional Engineer
(253) 395-6761

Enclosure (invoice, consistency statement checklist)

cc: Laurette Rasmussen, Whatcom County Health Department
Erin Osborn, Whatcom County Planning and Development
Paul Fabiniak, Department of Ecology, NWRO
LeRoy Dougall, Public Works Superintendent, City of Blaine
Roger Brown, Manager, Birch Bay Water & Sewer District
John Nottingham, PE, CHS Engineers, LLC

WHATCOM COUNTY
Planning & Development Services
5280 Northwest Drive
Bellingham, WA 98226-9097
360-676-6907, TTY 800-833-6384
360-738-2525 Fax

David Stalheim
Director

J.E. "Sam" Ryan
Assistant Director

October 6, 2008

Received
OCT 08 2008
CHS ENGINEERS

Jim Nottingham, PE
CHS Engineers, LLC
12507 Bel-Red Road, Ste. 101
Bellevue, WA 98005-2500

Re: City of Blaine Water System Plan
Whatcom County Coordinated Water System Plan Requirements

Dear Jim,

Thank you for taking the time to speak with me last week about the City of Blaine's Draft Comprehensive Water System Plan. As we discussed earlier, I am involved in two separate Whatcom County review processes that apply to the City's Plan. The first is the Local Government Consistency Review (as required by DOH), and the second is the Whatcom County Coordinated Water System Plan (WCCWSP) review for the City's water service area expansion. I will limit the scope of this letter to the WCCWSP requirements, and address the Local Government Consistency Review in another letter.

From our earlier discussion, it is my understanding that the City of Blaine is formalizing service area boundaries that take in already existing water lines, and extending boundaries to include new areas that have been logically chosen in order to prevent isolated pockets or islands in the midst of the general service area. This is considered an expansion of the formerly declared service area and prompts a review and approval process coordinated by Whatcom County Planning and Development Services (PDS) as described in Exhibit 4-3 of the WCCWSP.

Steps that are involved in review and approval of Water Service Area Expansion Requests pursuant to WCCWSP Exhibit 4-3 are summarized below:

1. The water utility shall provide PDS with a written request for the service area expansion specifying the reason or justification for the change, and a map that identifies both existing and proposed boundaries.

2. The water utility shall provide PDS with written documentation that confirms the identity of the person authorized to represent the water utility.

3. The water utility shall notify the public and seek input about the proposed expansion, and provide PDS with documentation to that effect.

Whatcom County Planning and Development Services staff will notify adjacent utilities within one half mile of the proposed expansion to obtain their written confirmation that the proposed service area expansion does not create a service conflict. If a service area conflict does exist, no further boundary modification may occur until the conflict is resolved between the impacted utilities; once these service area conflicts are resolved or if there are no service area conflicts with adjacent utilities, PDS will request that the authorized representative of the utility sign a Revised Service Area Declaration (to be provided). Typically, at this point PDS staff will direct the utility to contact DOH for modifications to their Water System Plan for the proposed water service area expansion; however in this case DOH is already in the process of conducting a review of the City of Blaine Draft Water System Plan, so this step is not necessary.

Once all of the steps described above have been completed, and any service area conflicts resolved, PDS staff will notify City of Blaine that the new service area boundaries have been approved. At the same time, PDS will also notify the Whatcom County Health Department of the approval. The next and final step will be for PDS staff to coordinate with Whatcom County PDS GIS staff to update the WCCWSP – Designated Water Service Areas Map; and once this has been done, the water system expansion request approval process will be complete.

If you have any questions about the procedures summarized in this letter, please don't hesitate to contact me.

Sincerely,

Erin Osborn, Planner

Enclosures: WCCWSP Exhibit 4-3

Cc: Stephen Banham, PE, City of Blaine, Public Works Director
Richard Rodriguez, Regional Planner, WSDOH
John P. Thielemann, Regional Engineer, WSDOH
Chronological File

Exhibit 4-3
Whatcom County CWSP
Service Area Boundary Amendment Procedure

Application: Amendments in water utility service area boundaries will occur when a utility or adjacent utilities wish to expand or reduce their service area and will be approved by the procedures defined herein only if a new conflict in service areas is not created by the modification.

Potential Stakeholders: Utility proposing the Amendment; Adjacent utilities; Whatcom County Planning and Development Services; Whatcom County Health and Human Services; and Washington State Department of Health;

Procedures:

1. The water utility requesting the service area boundary amendment shall submit their request in writing to WCPDS along with a map identifying the existing and requested boundaries. The written request shall specify the reason or justification for the change.
2. WCPDS will also insure that written confirmation is obtained from any adjacent utilities, within 1/2 mile of the proposed boundary change, that the proposed change does not create a service conflict.
3. If a conflict exists, then no further boundary modification occurs until the conflict is resolved between the impacted utilities. The remaining procedural steps are followed once it is established that there are no conflicts.
4. WCPDS will ensure that the water utility requesting the service area boundary amendment seeks public input regarding the requested amendment.
5. WCPDS prepares two copies of revised service area map and a Declaration for Water Utility Service Area and submits to affected utilities for their review, signature, and return to WCPDS of one signed copy with the remaining copy kept in their files. Special Working Agreements, if they exist, between all affected utilities shall be submitted as attachments to the Declaration.

Exhibit 4-3 (cont)

6. All submittals of requests for amendments (Procedure No. 1), confirmation of non-conflict (Procedure No. 3), and signed revised Service Area Declaration (Procedure No. 5) must bear the signature of an official authorized to represent the respective utility. Some form of written confirmation of this authority and/or agreement with the requested boundary amendment by the utility's governing body must be submitted to WCPDS.
7. The "official" service area maps are updated on GIS and hard copy, and shall be reviewed and updated with all changes at least quarterly and kept on file by WCPDS.
8. Copies of updated "official" service area maps are transmitted to Whatcom County Health and Human Services, Whatcom County Boundary Review Board, and the Washington State Department of Health.
9. WCPDS directs the applicant and all adjacent utilities, whose service area boundaries are adjusted, to the Department of Health for modifications required to their individual Water System Plans.
10. Copies of all signed Declarations and related correspondence shall be date stamped and kept on file for each participating utility by WCPDS.

WHATCOM COUNTY
Planning & Development Services
5280 Northwest Drive
Bellingham, WA 98226-9097
360-676-6907, TTY 800-833-6384
360-738-2525 Fax

David Stalheim
Director

J.E. "Sam" Ryan
Assistant Director

October 13, 2008

Received
OCT 1 5 2008
CHS ENGINEERS

Jim Nottingham, PE
CHS Engineers, LLC
12507 Bel-Red Road, Ste. 101
Bellevue, WA 98005-2500

Re: City of Blaine Draft 2008 Comprehensive Water System Plan
Local Government Consistency Review – Checklist & Comments

Dear Mr. Nottingham,

I have completed my review of the City of Blaine's Draft 2008 Comprehensive Water System Plan for local government consistency in accordance with Chapter 246-290-108 of the Washington Administrative Code (WAC). Listed below are my comments for your consideration.

1. It is my understanding that the City of Blaine is formalizing service area boundaries that take in already existing water lines from the former Sweet Road Water Association. While it appears that this part of the system has been in place for a long time there is no specific mention as to when the City of Blaine formally took over the Sweet Road Water System, or for what reasons. My recommendation is to include a discussion in Chapter 1.3.1 - Historical Water System Development about the inclusion of the former Sweet Road Water Association's infrastructure into the City of Blaine's Water System. A discussion here would provide some context for understanding how the City came to provide water service at urban level standards extending outside of the City limits, outside of the City's urban growth area, and into rural zoned Whatcom County. This addition would also help the City of Blaine's Water System Plan more fully describe system history and background pursuant to Chapter 246-290-100 (4) (a) (ii) WAC.

2. County Wide Planning Policies adopted as part of the 2005 & 2008 Whatcom County Comprehensive Plan make very clear that cities shall not extend water services outside of incorporated areas or into urban growth areas without an adopted program for annexation and an adopted Capital Facilities Plan (unless there is a documented health or

safety reason identified by the Whatcom County Health department.) Figure 3.1 of the City of Blaine Draft CWSP shows 16", 12" and 8" water mains extending beyond the City limits and outside of the City's urban growth area and into Whatcom County Rural zoning districts. This system capacity is consistent with urban levels of service as discussed in the Whatcom County Coordinated Water System Plan in Section 5.2.4 where it specifies that the minimum pipe diameter for distribution mains at urban level standards is 8". In order to be consistent with the Whatcom County Comprehensive Plan designations, I would recommend the addition of an explicit statement in Chapter 1.11 – Conditions of Service to indicate that the existence of pipes that meet minimum standards for urban development will not serve as justification to allow increased density in rural areas, now, or in the future.

3. It is noted that an Interim Policy regarding "Water Service Outside City Limits" is referenced in Volume 2 that lists criteria that provides the basis of informal policy decisions regarding the extension of water service connections outside the City limits. I recommend that this document be referred to and discussed in Volume 1 Chapter 1.11, and if at all possible, discuss the status of the interim nature of the Interim Policy: its effective date, and whether there is a timeline for its formal adoption as a permanent policy.

4. During my review I noticed that there is a discrepancy between pipe sizes as identified in Figure 1.3 and Figure 3.1. Figure 1.3 shows 6" pipe along Statsvold Road (which runs North – South between Sweet Road and Hoier Road), and in Figure 3.1 it shows 8" pipe along Statsvold Road. Some clarification as to which size pipe is actually in place as shown on the maps would be very helpful.

5. On page 1-9, Section E. of Volume 1, the 1997 Whatcom County Comprehensive Plan is listed as a related planning document. At the onset of preparing the City of Blaine Draft CWSP the most current version of the Whatcom County Comprehensive Plan (WCCP) in effect was the January 2005 WCCP. It is requested that the 2005 WCCP update be referenced in this document. However, it is preferred that the most recent version of the Whatcom County Comprehensive Plan that was adopted in June 2008 be referenced in the City of Blaine Final Draft CWSP.

6. On Page 2-8 of Volume 1, the 1997 Whatcom County Comprehensive Plan is referenced as a source of information about "...specific land use designations for the areas of the *City*." (Emphasis added) It appears that a scrivener's error was made here, and I suggest that the word *City* be replaced with *County.*

This concludes the extent of my comments and the completion of my review. Thank you for the opportunity to review this document. I am returning the signed Local Government Consistency Checklist along with this letter.

Please don't hesitate to contact me if you have any questions.

Sincerely,

Erin Osborn, Planner

Enclosures: Signed Local Government Consistency Review Checklist

Cc: Stephen Banham, PE, City of Blaine, Public Works Director
Richard Rodriguez, Regional Planner, WSDOH
John P. Thielemann, Regional Engineer, WSDOH
Chronological File

Health

COPY

Local Government Consistency Review Checklist

A consistency review between DOH planning and engineering documents and adopted comprehensive plans and development regulations is required in certain situations. This checklist may be used to document the consistency review as required in WAC 246-290-108. A consistency review is required for each local government with jurisdiction over the applicable service area.

Water System Name: City of Blaine PWS ID: 07300 0

Planning Document Title: Comprehensive Water System Plan Plan Date: July 2008

Local Government with Jurisdiction: City of Blaine

Consistency Statement	Page(s) in Planning Document	Yes – No – Not Applicable
The applicable service area is consistent with the land use and zoning in the adopted comprehensive plan and adopted development regulations.	2-7	Yes
For Water System Plans: The six-year growth projection used to forecast water demand is consistent with the adopted city/county's population growth projections. If a different growth projection was used, the alternative growth projection and methodology proposed is acceptable based on explanation given.	2-8	Yes
For Water System Plans: Provisions of water service for new service connections are consistent with the adopted comprehensive plan and adopted development regulations.	1-13	yes See Comments on 10/13/c letter
For city-owned systems only: All utility service extension ordinances regarding water service are included in the plan. These policies are consistent with the adopted comprehensive plan and adopted development regulations.	1-13	Yes
Other relevant elements related to water supply (as determined by DOH) is consistent with the adopted comprehensive plan and adopted development regulations.	N/A	N/A
Where the local government with jurisdiction did not provide a Consistency Review: Provide documentation of efforts taken and amount of time provided. Include: name of contact, date, type of effort attempted, and response from local agency.	N/A	N/A

I certify that the above statements are true to the best of my knowledge and that these statements support the conclusion that the subject-planning document is consistent with adopted comprehensive plans, development regulations, and other policies.

Erin Osborn 10/14/08

Signature Date

Erin Osborn, Planner, Whatcom County (PDS)

Printed Name, Title, & Jurisdiction

****For any issues of inconsistency, please document the inconsistency, including the citation from the comprehensive plan or development regulation. Provide direction on how this inconsistency can be resolved.****

NOTICE OF DETERMINATION OF NONSIGNIFICANCE (DNS)

City of Blaine CDS & **344 H Street** & **Blaine, Washington 98230**

Project Name
City of Blaine Comprehensive Water System Plan

SEPA File Number
SEP-7-08

Project Description
A plan for potable water delivery to the City of Blaine and certain adjacent areas of Whatcom County. The plan addresses infrastructure needed to provide water for estimated population growth.

Proponent
City of Blaine (Steve Banham, PE – Public Works Director)

Lead Agency
City of Blaine

Determination
The lead agency has determined that this project does not have a probable significant adverse impact on the environment. An environmental impact statement (EIS) is not required under RCW 43.21C.030 (2) (c). This decision was made after review of a completed environmental checklist and other information on file with the lead agency. Information on the process and the project is available to the public upon request at the City of Blaine, Community Development Services office.

Comment Period
This DNS is issued under WAC 197-11-340 (2). The lead agency will not act on this proposal for 14 days from the date of issuance. Comments must be submitted by the end of the business day on July 15, 2008. Copies of the DNS are available upon request. The full Water System Plan is available for review at the City of Blaine Community Development Services Department (322 H Street) and Public Works Department (1200 Yew Avenue).

Responsible Official
Michael Jones

Development Permit Manager, City of Blaine
344 H Street, Blaine, WA 98230

Phone: 360-332-8311
Fax: 360-543-9978
Email: mjones@cityofbaline.com

Appeal
This determination may be appealed by letter to the SEPA Official at the address noted above. Such an appeal would need to be made by the end of the business day on July 15, 2008. Appeals must include a specific factual objection. Questions should be directed to the responsible official noted above.

Signature: _____ Date: 6/30/08

Health

Local Government Consistency Review Checklist

A consistency review between DOH planning and engineering documents and adopted comprehensive plans and development regulations is required in certain situations. This checklist may be used to document the consistency review as required in WAC 246-290-108. A consistency review is required for each local government with jurisdiction over the applicable service area.

Water System Name: CITY OF BLAINE PWS ID: 07300 D

Planning Document Title: COMP. WATER SYSTEM PLAN Plan Date: 7/08, Rev. 11/09

Local Government with Jurisdiction: CITY OF BLAINE

Consistency Statement	Page(s) in Planning Document	Yes – No – Not Applicable
The applicable service area is consistent with the land use and zoning in the adopted comprehensive plan and adopted development regulations.	1-10, 1-12, 2-7	Yes
For Water System Plans: The six-year growth projection used to forecast water demand is consistent with the adopted city/county's population growth projections. If a different growth projection was used, the alternative growth projection and methodology proposed is acceptable based on explanation given.	2-1, 2-8	Yes
For Water System Plans: Provisions of water service for new service connections are consistent with the adopted comprehensive plan and adopted development regulations.	1-12	Yes
For city-owned systems only: All utility service extension ordinances regarding water service are included in the plan. These policies are consistent with the adopted comprehensive plan and adopted development regulations.	1-12	yes
Other relevant elements related to water supply (as determined by DOH) is consistent with the adopted comprehensive plan and adopted development regulations.		N/A
Where the local government with jurisdiction did not provide a Consistency Review: Provide documentation of efforts taken and amount of time provided. Include: name of contact, date, type of effort attempted, and response from local agency.		N/A

I certify that the above statements are true to the best of my knowledge and that these statements support the conclusion that the subject-planning document is consistent with adopted comprehensive plans, development regulations, and other policies.

Signature Date 11/10/09

MICHAEL T. JONES, CDS DIRECTOR, BLAINE
Printed Name, Title, & Jurisdiction

****For any issues of inconsistency, please document the inconsistency, including the citation from the comprehensive plan or development regulation. Provide direction on how this inconsistency can be resolved.****

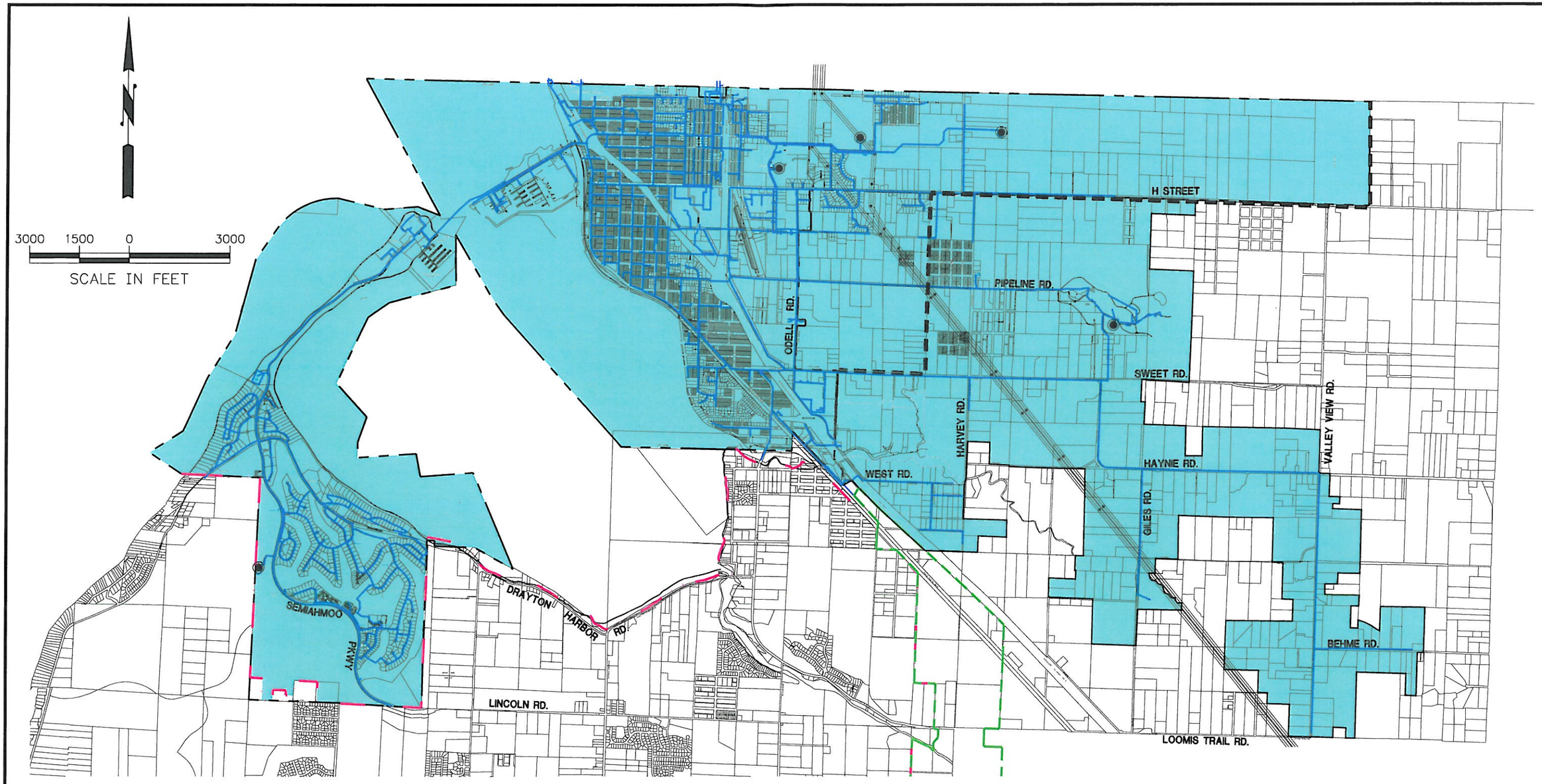

LEGEND

- RESERVOIR
- WATER MAINS
- CITY OF BLAINE WATER SERVICE AREA WITHIN CITY LIMITS
- CITY OF BLAINE WATER SERVICE AREA OUTSIDE CITY LIMITS
- URBAN GROWTH AREA BOUNDARY
- BIRCH BAY WATER AND SEWER DISTRICT SERVICE AREA BOUNDARY
- BELL–BAY JACKSON WATER DISTRICT BOUNDARY
- EXISTING/FUTURE WATER SERVICE AREA (ENCOMPASSING "RETAIL SERVICE AREA")

CHS
CHS ENGINEERS, LLC

CITY OF BLAINE
COMPREHENSIVE WATER SYSTEM PLAN

FIGURE 1.2

WATER SERVICE AREA

NOVEMBER 2009

270606\comp plan fig4.DWG 11x17 1=3000 11/30/09