Transportation Impact Analysis

RESORT SEMIAHMOO ZONE 3

Prepared for:
M-KOV, Inc.

September 2016

Prepared by:

transpogroup
WHAT TRANSPORTATION CAN BE.

11730 118th Avenue NE, Suite 600
Kirkland, WA 98034-7120
Phone: 425-821-3665
Fax: 425-825-8434
www.transpogroup.com

16192.00

© 2016 Transpo Group

Table of Contents

Introduction **1**
Project Description 1
Study Area 1

Existing and Future Without-Project Conditions **3**
Roadway Network 3
Non-Motorized Facilities 4
Transit and Ferry Service 4
Planned Improvements 4
Traffic Volumes 4
Traffic Operations 8
Traffic Safety 9

Project Impacts **10**
Trip Generation 10
Trip Distribution and Assignment 11
Future With-Project Traffic Volumes 11
Future With-Project Traffic Operations 14
Site Access Analysis 14
Non-Motorized Facilities 16

Mitigation **17**

Findings and Recommendations **18**

Appendix

Appendix A: Traffic Counts
Appendix B: LOS Definitions
Appendix C: LOS Worksheets
Appendix D: WSDOT Left and Right-Turn Lane Exhibits

Figures

Figure 1. Site Vicinity and Study Intersections 1
Figure 2. Preliminary Site Plan 2
Figure 3. Existing (2016) Weekday PM Peak Hour Traffic Volumes 5
Figure 4. Future (2020) Without-Project Weekday PM Peak Hour Traffic Volumes 7
Figure 5. Project Trip Distribution and Assignment 12
Figure 6. Future (2020) With-Project Weekday Peak Hour Traffic Volumes 13

Tables

Table 1. Existing and Without-Project Weekday Peak Hour Levels of Service 8
Table 2. Study Intersection Collision Data Summary (2013 – 2015) 9
Table 3. Estimated Weekday PM Peak Hour Project Trip Generation 10
Table 4. Future With-Project Weekday Peak Hour Levels of Service 14
Table 5. Transportation Mitigation Improvements 17

Introduction

The purpose of this transportation impact analysis (TIA) is to identify potential transportation-related impacts associated with the proposed Resort Semiahmoo Zone 3 mixed use development.

Project Description

The project is a mixed use development that is primarily residential but also includes 5,000 square-feet of retail and 24,000 square-feet of storage providing 60 storage units. The residential component of the development is still being evaluated but includes mixes of single family, multifamily, and duplex units. The residential uses included for the analysis assume the higher unit options being considered which are 44 single family dwelling units, 41 multifamily units, and 22 duplex units (equivalent of 44 single family dwelling units).

In addition, part of the project site is a 1.75-acre area that is being considered to be developed as a City park; however, if it is not developed as a City park it would be developed as residential units. If developed as residential units this would include 7 single family dwelling units and 4 duplex units, resulting in an overall residential development of 51 single family dwelling units, 41 multifamily units, and 26 duplex units (equivalent of 52 single family dwelling units). The proposed residential unit estimate is conservative. It is possible that a lower unit count would be constructed.

The project will provide 37 parking spaces as well as 2 parking spaces per residential unit. In addition, if the 1.75-acre area is developed as a City park, 12 parking spaces would be provided for that use.

It is anticipated that the project would be completed, fully occupied, and generating traffic by 2020. Figure 1 illustrates the project site and surrounding vicinity.

A preliminary site plan is shown in Figure 2. As shown in the site plan, site access is proposed via two access points. The first access is proposed as the fourth leg (the west leg) of the Semiahmoo Parkway/Gleneagle intersection and the second access is proposed along Semiahmoo Drive/Drayton Harbor Road, west of the Semiahmoo Parkway / Semiahmoo Drive intersection.

Study Area

The analysis focuses on the weekday PM peak period (busiest one hour between 4:00 to 6:00 p.m.) operations at nine intersections as well as a proposed site access. This period represents the highest cumulative total traffic for the adjacent street system providing a conservative timeframe for level of service (LOS) analysis. The study intersections were coordinated with the City and County and are listed below (see also Figure 1):

1. Semiahmoo Parkway / Semiahmoo Dr
2. Semiahmoo Parkway / Gleneagle Dr
3. Harborview Rd / Drayton Harbor Rd
4. Blaine Rd / Drayton Harbor Rd
5. Shintaffer Rd / Lincoln Rd
6. Harborview Rd / Lincoln Rd
7. Harborview Rd / Anderson Rd
8. Harborview Rd / Birch Bay-Lyden Rd
9. Blaine Rd (SR 548) / Birch Bay-Lynden Rd

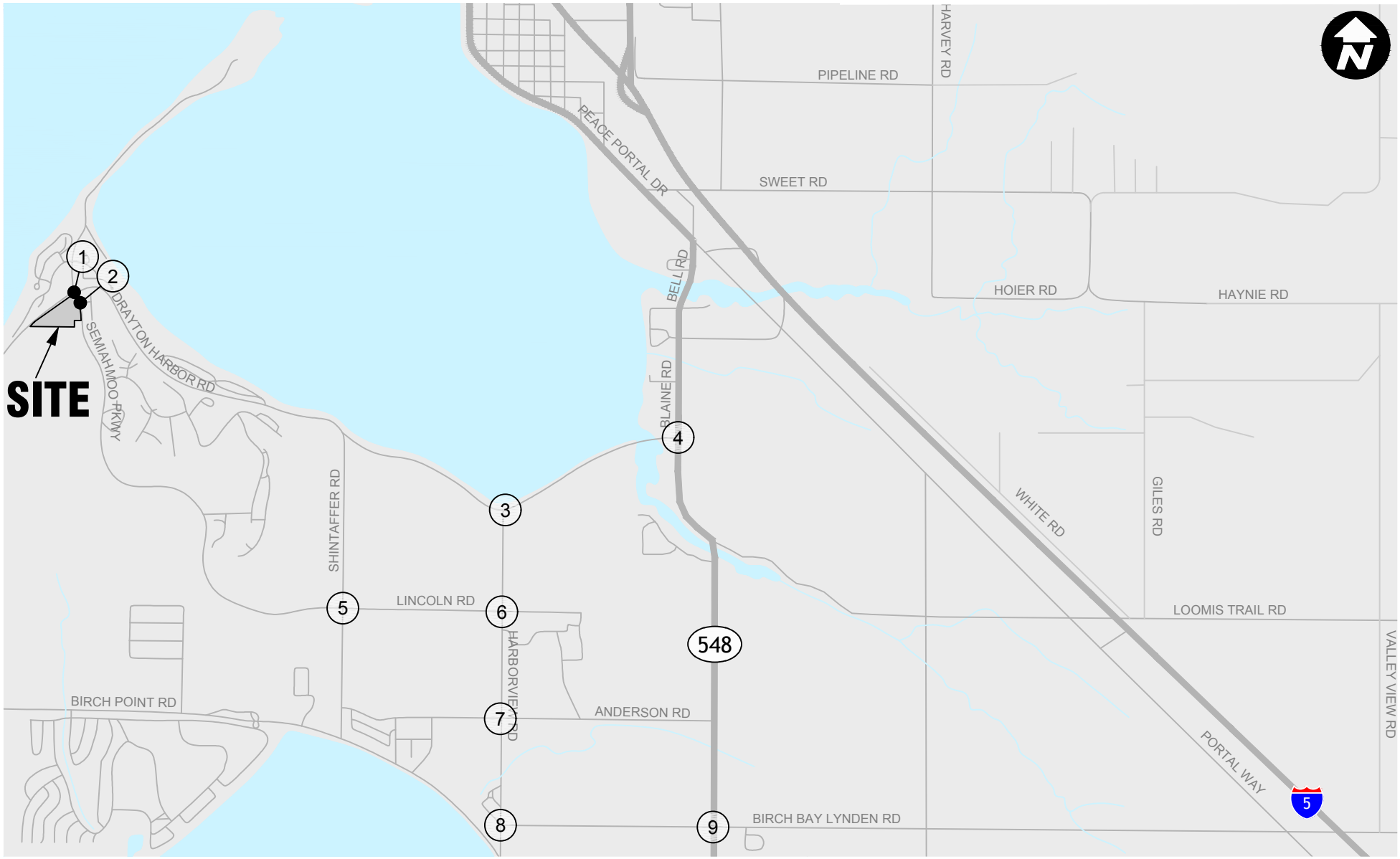

Site Vicinity and Study Intersections

Resort Semiahmoo Zone 3

FIGURE

1

transpogroup
WHAT TRANSPORTATION CAN BE.

Sep 06, 2016 - 12:12pm francescal M:\16\16192.00 - Burnside Village\Graphics\Burnside_16192 Graphics_updated.dwg Layout: Vic

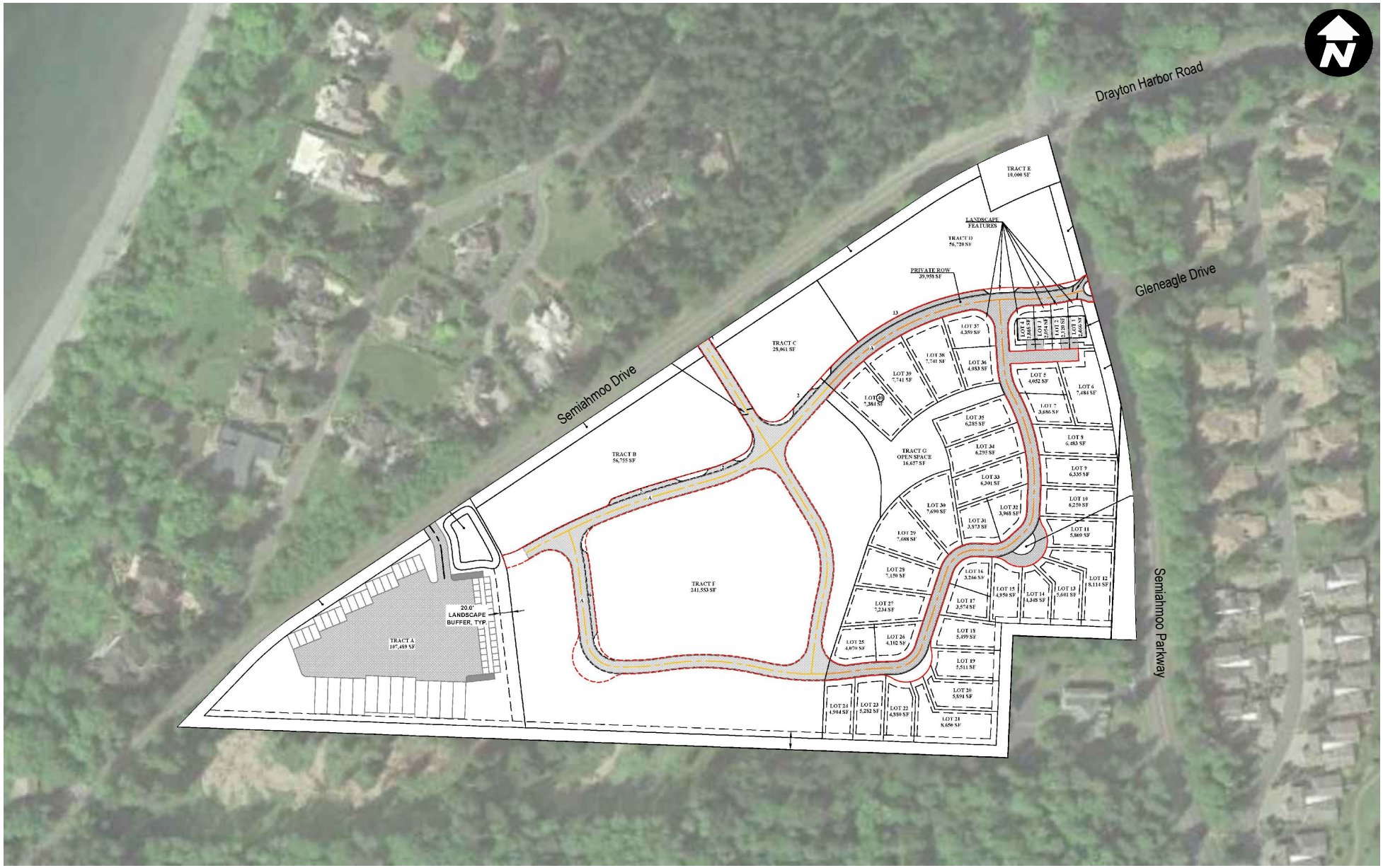

Preliminary Site Plan

Resort Semiahmoo Zone 3

FIGURE

2

transpogroup
WHAT TRANSPORTATION CAN BE.

Sep 06, 2016 - 12:13pm francescal M:\16\16192.00 - Burnside Village\Graphics\Burnside_16192 Graphics_updated.dwg Layout: Site Plan

Existing and Future Without-Project Conditions

This section describes existing and future without-project conditions within the identified study area. Characteristics are provided for the roadway network, non-motorized facilities, transit service, existing and future without-project traffic volumes, traffic operations, and traffic safety.

Roadway Network

The project site is bounded by Semiahmoo Drive to the northwest and Semiahmoo Parkway to the east. The major roadways within the study area include:

Semiahmoo Parkway / Lincoln Road is a two-lane collector that extends from Harborview Road into west Blaine. The roadway is called Lincoln Road to the east of Shintaffer Road, and Semiahmoo Parkway to the west. Within the vicinity of the project, Semiahmoo Parkway is a two-lane major collector south of Semiahmoo Drive and a minor collector north of Semiahmoo Drive. Paved shoulders exist along both sides of the road, with no curbs, gutter or sidewalks. The posted speed limit is 35 mph. A trail runs along one side within City limits.

Semiahmoo Drive is a two-lane major collector that runs west of Semiahmoo Parkway. Unpaved shoulders exist along both sides of the roadway, with no curbs or sidewalks along either side. A trail is provided along the south side of the roadway, in the project vicinity. The posted speed limit is 35 to 45 mph.

Drayton Harbor Road is a two-lane minor collector that runs east of Semiahmoo Parkway. Unpaved shoulders exist along both sides of the roadway, with no curbs or sidewalks along either side. The posted speed limit is 35 mph. A trail runs along one side within City limits.

Gleneagle Drive is a two-lane roadway classified as a local road providing access to an existing residential development east of Semiahmoo Parkway.

Shintaffer Road is a two-lane collector that runs north-south from Drayton Harbor Road to Birch Bay Drive. Unpaved shoulders exist along both sides of Shintaffer Road in the proposed Project vicinity, with no curb, gutter or sidewalks. The posted speed limit is 35 mph.

Harborview Road is a two-lane, north-south collector that extends from Drayton Harbor Road south to Birch Bay Drive. Within the study area, there are unpaved shoulders with no curb along both sides of the street. The posted speed limit is 40 mph.

Blaine Road (SR 548) is a two-lane state highway that connects to I-5 to the north within downtown Blaine. Unpaved shoulders exist along both sides of the road in the proposed Project vicinity, with no curbs on either side. The posted speed limit is 35 mph to 45 mph.

Birch Bay-Lynden Road is a two-lane collector that runs east-west from Harborview Road to the City of Lynden. Intermittent paved shoulders exist within the Project vicinity with no curb, gutter or sidewalks provided. The posted speed limit is 40 to 50 mph.

The study intersections are either side-street stop controlled or all-way stop controlled intersections. The Semiahmoo Parkway / Semiahmoo Drive and Blaine Rd / Birch Bay-Lynden Road intersections are all-way stop-controlled intersections and the remaining study intersections are side-street stop controlled intersections.

Non-Motorized Facilities

The study area has both regional recreation and community trails. Regional recreational trails have a county-wide significance drawing users from throughout the region and community trails link neighborhoods, major parks, schools, commercial centers, and other destinations throughout the City. The nearest trail, is a paved trail along the south side of Semiahmoo Drive along the project frontage. In addition, there are two regional recreational trails including the Semiahmoo Split Loop Trail and Coast Millennium Trail. The Semiahmoo Spit trail is an eight-foot bicycle/pedestrian path that parallels Semiahmoo Parkway and is separated by a planting strip which loops around the entire Spit and extends along Semiahmoo Parkway adjacent to the north side of the proposed project site. The Coast Millennium Trail travels from Birch Bay through Semiahmoo across Drayton Harbor on the foot-ferry[1] then along Marine Drive and to the United States/Canadian border. As discussed previously, no sidewalk facilities are provided along most of the roadways within the study area.

Transit and Ferry Service

Whatcom Transit Authority (WTA) serves the City of Blaine with two routes serving downtown Blaine provide service to Cordata and Bellingham; however, no routes are provided in the vicinity of the project. Although, no routes are available within the vicinity of the project, WTA provides Zone Service to the site area. WTA Zone Service provides limited transit service to rural areas with advance reservations, which is limited to Monday thru Thursday within the project area zone.

Excursion passenger ferry service is provided seasonally north of the project site between the Spit across Drayton Harbor to Blaine on Fridays, Saturdays and Sundays between Memorial Day and Labor Day. The ferry is owned by the City of Blaine and leased to the Drayton Harbor Maritime Society.

Planned Improvements

Based on a review of the City of Blaine's *Six-Year (2016-2021) Transportation Improvement Program* (TIP) as well as the Whatcom Council of Governments 2016-2019 Transportation Improvement Program, no funded improvements were identified that would change existing conditions at the study intersections. Three unfunded improvements were identified:

- Resurfacing Semiahmoo Parkway from Drayton Harbor Road to the City Limits, approximately 1.5 miles that is anticipated to occur in 2018;
- Semiahmoo Spit pedestrian path safety improvements from the County Park to the Marina which is anticipated to be completed by 2019;
- Lincoln Road reconstruction from Harborview Rd to SR 548 which is anticipated to be completed by 2019.

These projects would not change the existing capacity at the study intersections.

Traffic Volumes

Figure 3 illustrates existing weekday PM peak hour traffic volumes at the study intersections. Traffic counts were collected at the study intersections in May and August 2016. Detailed intersection traffic counts are provided in Appendix A. Traffic volumes were rounded to the nearest five vehicles since weekday volumes fluctuate day-to-day.

[1] The foot-ferry is seasonal and provides a pedestrian link between Semiahmoo Spit and the Wharf District or West Blaine to Central Blaine.

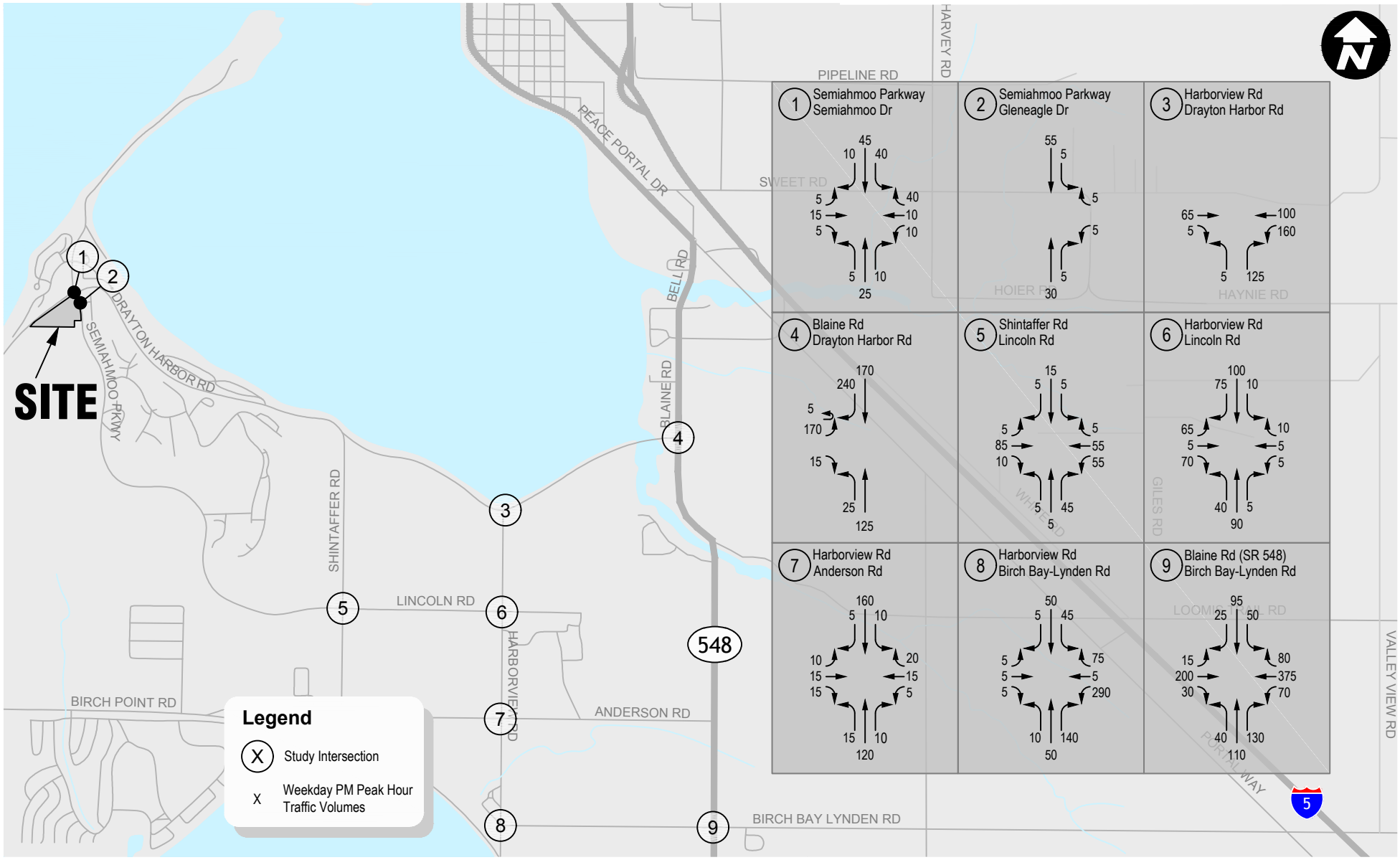

Existing Weekday PM Peak Hour Traffic Volumes

Resort Semiahmoo Zone 3

FIGURE

3

transpogroup
WHAT TRANSPORTATION CAN BE.

Sep 06, 2016 - 12:08pm francescal M:\16\16192.00 - Burnside Village\Graphics\Burnside_16192 Graphics_updated.dwg Layout: Ex Vol

Future without-project weekday PM peak hour traffic volumes were estimated by increasing existing traffic volumes by 2 percent per year to 2020 and adding traffic generated by 2 pipeline developments within the vicinity of the project identified through coordination with City staff, and consistent with previous studies in the vicinity of the project. This growth rate is consistent with previous studies in the vicinity of the site. The pipeline projects included are Semiahmoo Spit Master Plan, Semiahmoo Shores, Sea Grass Cottages, Zone 26, Lot 3, Drayton Hillside, Prestwick Woods, Ridge at Semiahmoo.

Figure 4 illustrates the future 2020 without-project weekday PM peak hour traffic volumes at the study intersections.

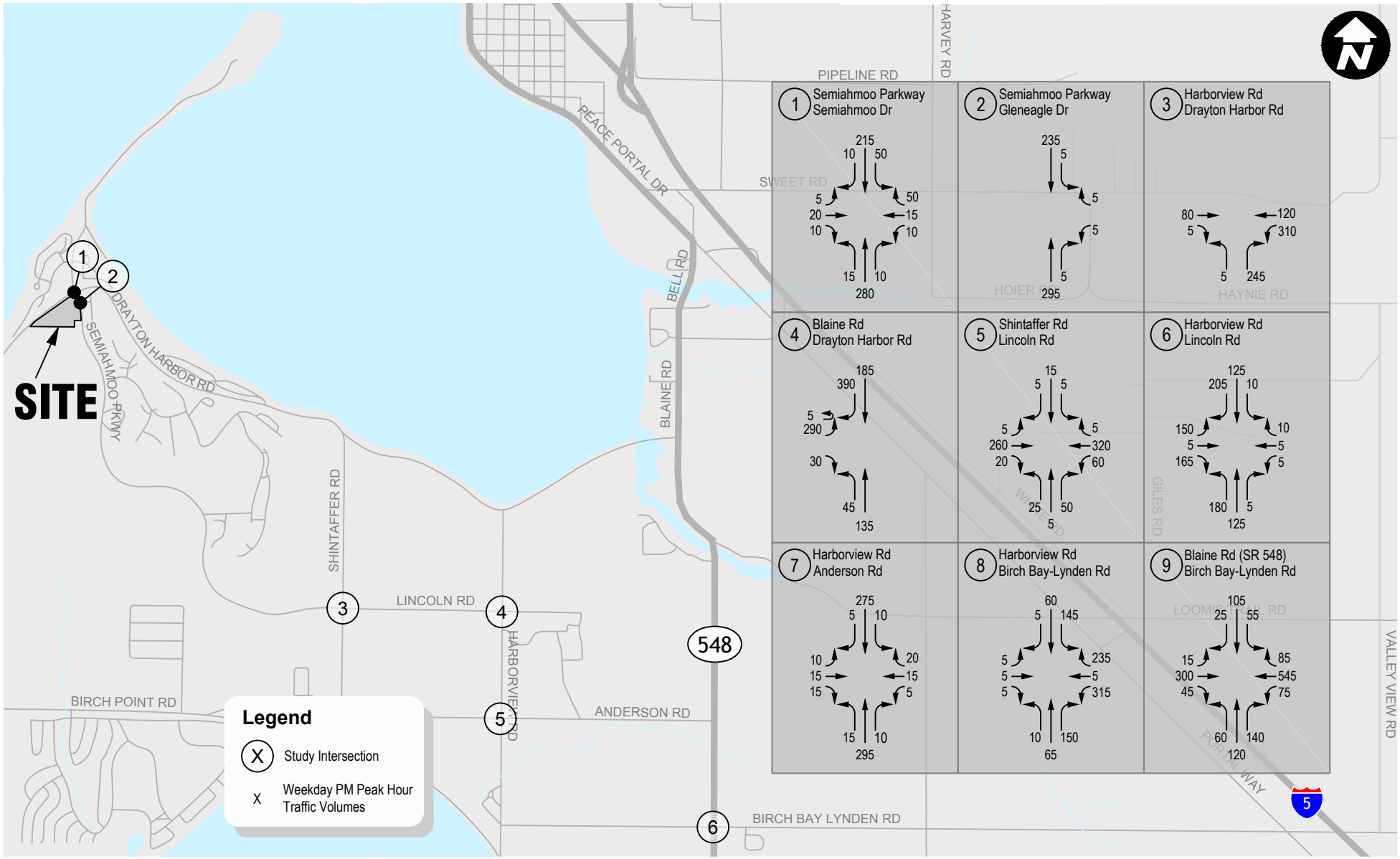

Future (2020) Without-Project Weekday PM Peak Hour Traffic Volumes

FIGURE **4**

Resort Semiahmoo Zone 3

transpogroup
WHAT TRANSPORTATION CAN BE.

Sep 06, 2016 - 12:10pm francescal M:\16\16192.00 - Burnside Village\Graphics\Burnside_16192 Graphics_updated.dwg Layout: WOP Vol

Traffic Operations

The operational characteristics of an intersection are determined by calculating the intersection level of service (LOS). For all-way stop controlled locations, LOS is measured in average delay per vehicle and is reported for the intersections as a whole. At side-street stop-controlled intersections, LOS is measured in average delay per vehicle and is reported for the worst operating approach or movement of the intersection. Traffic operations for an intersection can be described alphabetically with a range of levels of service (LOS A through F), with LOS A indicating free-flowing traffic and LOS F indicating extreme congestion and long vehicle delays. Appendix B contains a detailed explanation of LOS criteria and definitions.

Weekday PM peak hour traffic operations for existing and future without-project conditions were evaluated at the study intersections based on the procedures identified in the *Highway Capacity Manual (HCM)* (2010), and were evaluated using the *Synchro 9* software program. Based on the City of Blaine's *Comprehensive Plan* (2006), the City has adopted an LOS D or better standard. Table 1 summarizes the existing and future without-project weekday PM peak hour LOS at study intersections. The detailed LOS worksheets are included in Appendix C.

Table 1. Existing and Without-Project Weekday Peak Hour Levels of Service

	2016 Existing			2020 Without-Project		
Intersections	**LOS[1]**	**Delay[2]**	**WM[3]**	**LOS**	**Delay**	**WM**
1. Semiahmoo Parkway / Semiahmoo Dr	A	8	EB	B	11	WB
2. Semiahmoo Parkway / Gleneagle Dr	A	9	WB	B	12	WB
3. Harborview Rd / Drayton Harbor Rd	B	11	EB	C	18	EB
4. Blaine Rd / Drayton Harbor Rd	C	17	EB	F	53	EBL
5. Shintaffer Rd / Lincoln Rd	B	11	SB	C	19	SB
6. Harborview Rd / Lincoln Rd	B	13	EB	E	49	EBL
7. Harborview Rd / Anderson Rd	B	11	EB	B	14	EB
8. Harborview Rd / Birch Bay-Lynden Rd	B	12	WB	B	14	WB
9. Blaine Rd (SR 548) / Birch Bay-Lynden Rd	E	36	WB	F	129	WB

1. Level of Service (A – F) as defined by the *Highway Capacity Manual* (TRB, 2010)
2. Average delay per vehicle in seconds.
3. Worst movement reported for unsignalized intersections; WB = westbound approach

As shown in Table 1, all study intersections currently operate at LOS C or better under existing conditions during the weekday PM peak hour, with the exception of the Blaine Road / Birch Bay-Lynden Road intersection. This intersection is shown to operate at LOS E under existing conditions and would degrade to LOS F in the future. The County has been considering a roundabout for this location to improve operations. Additionally, the eastbound left-turn movements of the Harborview Road / Lincoln Road and Blaine Road/ Drayton Harbor Road intersections are anticipated to operate at LOS E and LOS F during future without-project conditions respectively. The remaining study intersections are anticipated to operate at acceptable levels.

Traffic Safety

Collision records were reviewed at the study intersections to document any potential traffic safety issues. The most recent summary of collision data from WSDOT is for the three-year period between January 1, 2013 and December 31, 2015. A historical review of collisions was conducted at off-site study intersections. A summary of the total and average annual number of reported collisions as well as the collisions rate at each study intersection is provided in Table 2.

Table 2. Study Intersection Collision Data Summary (2013 – 2015)

	Number of Reported Collisions					
Intersection	**2013**	**2014**	**2015**	**Total**	**Annual Average**	**Collisions per MEV[1]**
1. Semiahmoo Parkway / Semiahmoo Dr	0	0	0	0	0.0	0.00
2. Semiahmoo Parkway / Gleneagle Dr	0	0	0	0	0.0	0.00
3. Harborview Rd / Drayton Harbor Rd	1	0	0	1	0.3	0.20
4. Blaine Rd / Drayton Harbor Rd	1	1	2	4	1.3	0.49
5. Shintaffer Rd / Lincoln Rd	1	0	0	1	0.3	0.31
6. Harborview Rd / Lincoln Rd	0	0	1	1	0.3	0.19
7. Harborview Rd / Anderson Rd	0	0	0	0	0.0	0.00
8. Harborview Rd / Birch Bay-Lynden Rd	0	0	0	0	0.0	0.00
9. Blaine Rd (SR 548) / Birch Bay-Lynden Rd	3	4	0	7	2.3	0.52

Source: WSDOT and Transpo Group, 2016.
1. Million Entering Vehicles

The collision rate is representative of the number of collisions per one million entering vehicles (MEV) at each intersection. Intersections with a rate greater than 1.0 collision per MEV are typically flagged for further investigation to determine whether an adverse condition exists. As shown in the table, all study intersections are at or below 0.6 collisions per MEV.

The highest number of collisions occurred at the Blaine Road (SR 548) / Birch Bay-Lynden Road intersection with an average of approximately 2 collisions per year. The most frequent collision type at this intersection was reported to be angle collisions.

There were no reported fatalities in the study area as well as no reported pedestrian or bicyclist collisions.

Project Impacts

This section of the analysis documents potential project-generated impacts on the surrounding street network and study intersections. First, estimated traffic volumes generated by the proposed project are distributed and assigned to the adjacent street system. Next, project trips are added to future without-project traffic volumes and any potential impacts to traffic operations, non-motorized, and safety are identified. Site access operations are also discussed.

Trip Generation

Trip generation for the proposed mixed-use development is summarized in Table 3. Estimates for the project-generated vehicle trips were calculated using average peak hour trip rates for single-family detached housing, apartments, self-storage, City park, and retail published by the Institute of Transportation Engineers (ITE) in *Trip Generation* (9th Edition, 2012). As described previously, the proposed project would construct 44 single family dwelling units, 22 duplex units (equivalent to 44 single family dwelling units), 41 multi-family units, 5,000 square-feet of retail, and 24,000 square-feet of storage providing 60 storage units. In addition, a 1.75-acre area of the site would either be constructed as City park or as residential including 7 single family dwelling units and 4 duplex units. Both of these options are shown in the table below.

Table 3. Estimated Weekday PM Peak Hour Project Trip Generation

Land Use[1]	Size	Single Family Equivalent	PM Rate	Total	Pass-by %	Pass-by Total	% Inbound	PM Peak Hour Trips In	PM Peak Hour Trips Out	PM Peak Hour Trips Total
Apartments (#220)	41 DU	-	0.62	25	-		65%	16	9	25
Single Family Detached Housing (#210)	44 DU	-	1.00	44	-		63%	28	16	44
Duplex[2]	22	44	1.00	44	-		63%	28	16	44
Mini-Warehouse (#151)	24,000 sf	-	0.26	6	-		50%	3	3	6
Retail (#820)	5,000 sf	-	3.71	19	34%	-6	48%	6	7	13
Subtotal				**138**				**81**	**51**	**132**
1.75 Acre Area										
Option 1										
City Park (#411)	**1.75 Acres**	**-**	**3.50**	**6**	**-**		**57%**	**3**	**3**	**6**
Option 2										
Single Family Detached Housing (#210)	7	-	1.00	7	-		63%	4	3	7
Duplex	4	8	1.00	8	-		63%	5	3	8
Option 2 Subtotal				**15**				**9**	**6**	**15**
Total New Trips With Option 1								**84**	**54**	**138**
Total New Trips With Option 2								**90**	**57**	**147**

Note: DU = Dwelling Units, sf = square-feet
1. Trip generation estimates based on the number of units and the average daily and peak hour trip rates from ITE *Trip Generation*, 9th Edition (2012).
2. Duplex evaluated as single family detached housing (#210) assuming 1 duplex is equivalent to 2 single family dwelling units.

The proposed project would generate approximately 138 to 147 new weekday PM peak hour trips depending on if the 1.75-acre area of the site is developed as a park or as residential, respectively. A range of 84 to 90 inbound and 54 to 57 outbound weekday PM peak hour trips

are estimated for the two options. As noted above, this estimate is conservative as it is possible that a lower residential unit count would be constructed.

Trip Distribution and Assignment

Project trip distribution was estimated based on existing travel patterns in the study area and previous projects submitted in the vicinity of the project. Figure 5 illustrates the anticipated trip distribution during the weekday PM peak hours. As shown in Figure 5, the trips are distributed with approximately 10 percent to/from the east along Drayton Harbor Road, 70 percent to/from the south along Semiahmoo Parkway, 15 percent to/from the north via Semiahmoo Parkway to the Spit and 5 percent to/from the west via Semiahmoo Drive.

Weekday PM peak hour project trips were assigned to the study intersections based on the travel patterns described above. In order to provide a conservative analysis, the higher trip generation estimates (Option 2 – the 1.75-acre area being developed as residential) were assumed. The resulting trip assignment is shown in Figure 5.

Future With-Project Traffic Volumes

Site-generated weekday PM peak hour traffic volumes were added to the future without-project traffic volumes at the study intersections. The resulting future (2020) with-project peak hour traffic volumes are illustrated in Figure 6.

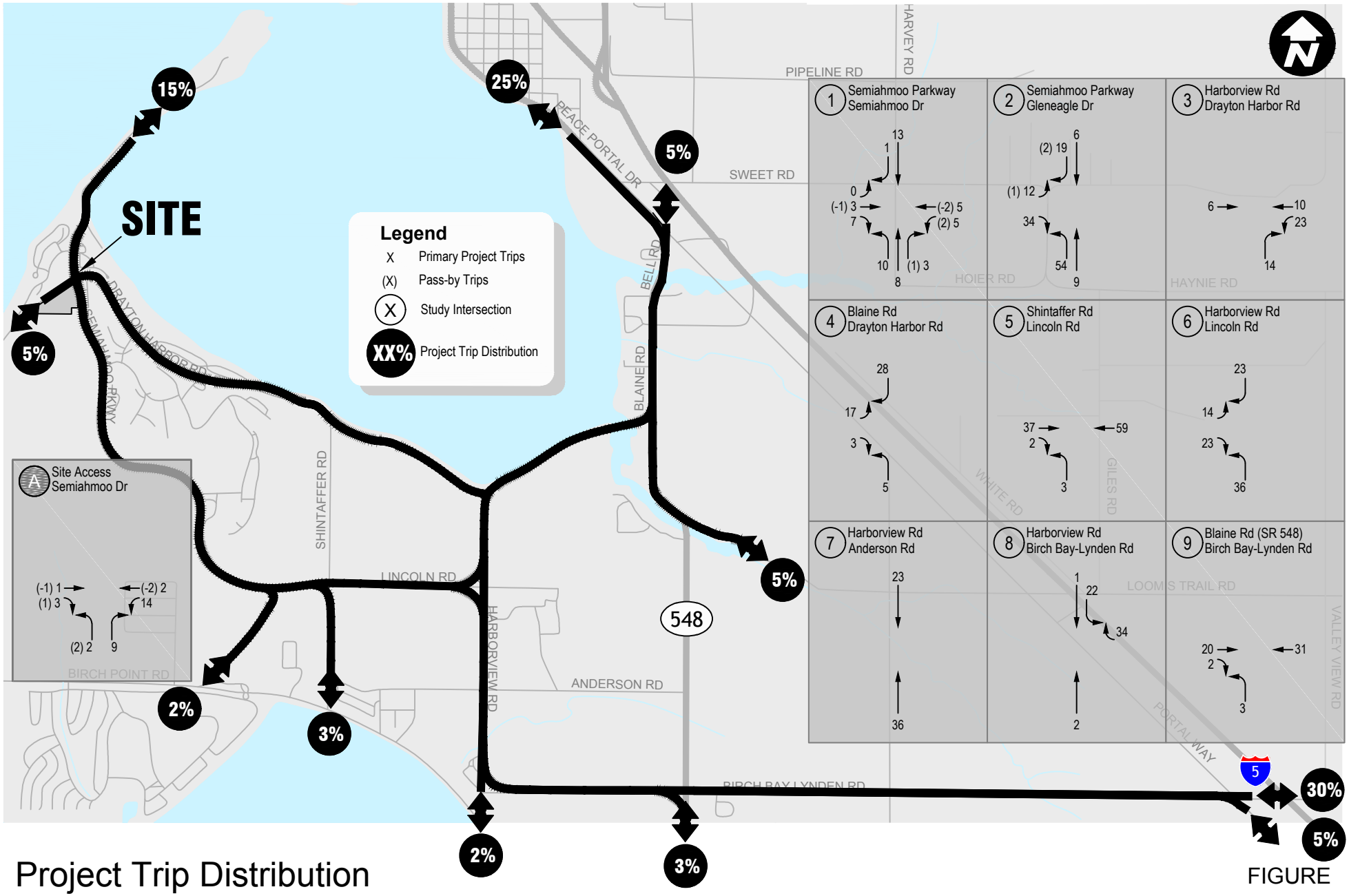

Project Trip Distribution

Resort Semiahmoo Zone 3

FIGURE

5

transpogroup
WHAT TRANSPORTATION CAN BE.

Sep 06, 2016 - 12:14pm francescal M:\16\16192.00 - Burnside Village\Graphics\Burnside_16192 Graphics_updated.dwg Layout: Dist

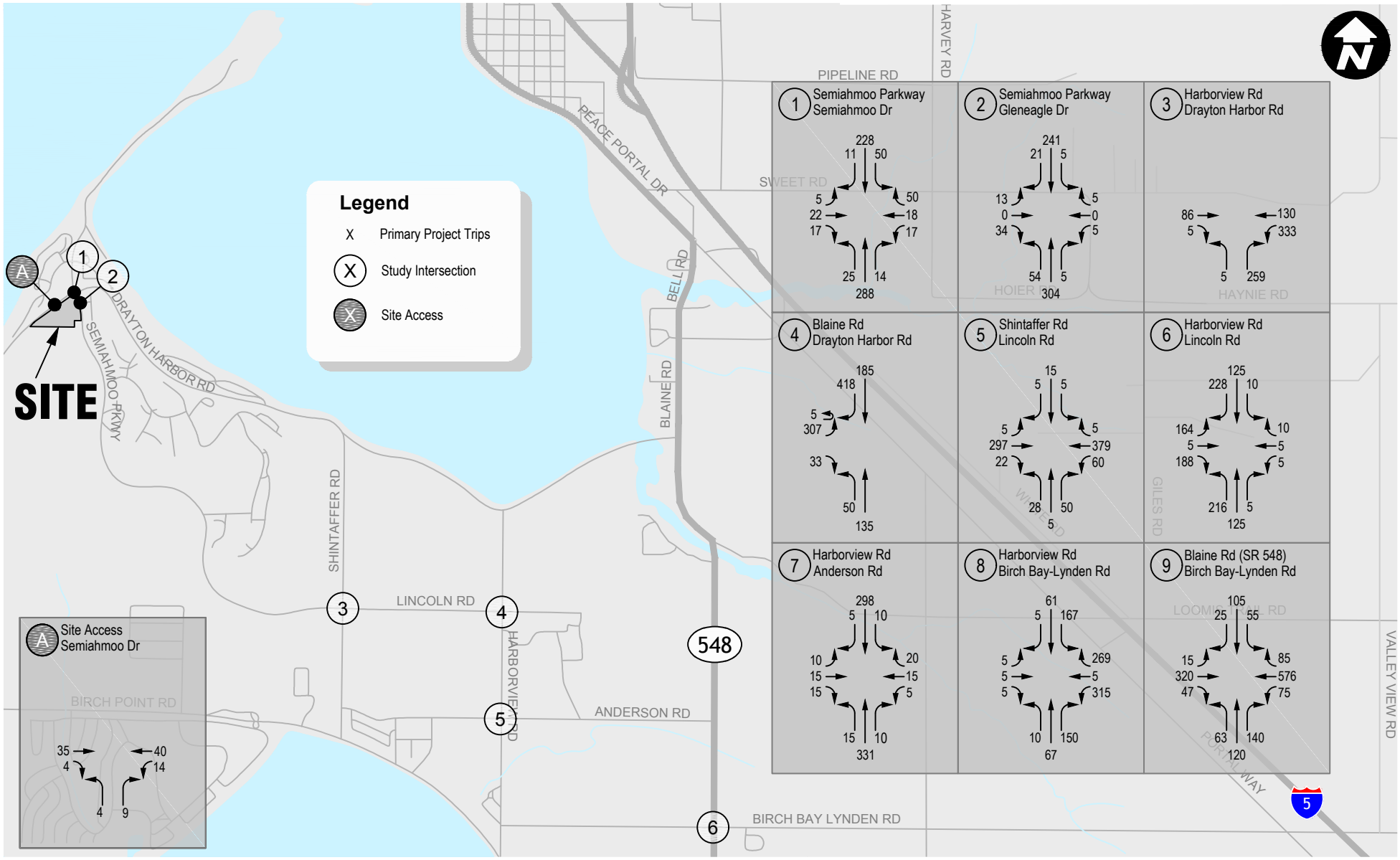

Future (2020) With-Project Weekday PM Peak Hour Traffic Volumes

FIGURE **6**

Resort Semiahmoo Zone 3

transpogroup
WHAT TRANSPORTATION CAN BE.

Sep 06, 2016 - 12:12pm francescal M:\16\16192.00 - Burnside Village\Graphics\Burnside_16192 Graphics_updated.dwg Layout: WP Vol

Future With-Project Traffic Operations

Future 2020 with-project study intersection operations were evaluated for the weekday PM peak hours. Intersection LOS was calculated using the methodology described previously. The without-project conditions are compared to the with-project conditions to understand the potential traffic impacts of the proposed project. Table 4 summarizes the 2020 without and with-project intersection operations for the weekday PM peak hours. LOS worksheets are included in Appendix C.

Table 4. Future With-Project Weekday Peak Hour Levels of Service

	2020 Without-Project			2020 With-Project		
Intersections	**LOS[1]**	**Delay[2]**	**WM[3]**	**LOS**	**Delay**	**WM**
1. Semiahmoo Parkway / Semiahmoo Dr	B	11	WB	B	11	NB
2. Semiahmoo Parkway / Gleneagle Dr	B	12	WB	C	15	WB
3. Harborview Rd / Drayton Harbor Rd	C	18	EB	C	17	EB
4. Blaine Rd / Drayton Harbor Rd	F	53	EBL	F	73	EBL
5. Shintaffer Rd / Lincoln Rd	C	19	SB	C	21	SB
6. Harborview Rd / Lincoln Rd	E	49	EBL	F	92	EBL
7. Harborview Rd / Anderson Rd	B	14	EB	B	14	EB
8. Harborview Rd / Birch Bay-Lynden Rd	B	14	WB	B	15	WB
9. Blaine Rd (SR 548) / Birch Bay-Lynden Rd	F	129	WB	F	150	WB
A. Site Access / Semiahmoo Dr	-	-	-	A	9	NB

1. Level of Service (A – F) as defined by the *Highway Capacity Manual* (TRB, 2010)
2. Average delay per vehicle in seconds.
3. Worst movement reported for unsignalized intersections; NB = northbound approach, WB = westbound approach.

As shown in Table 4, with the addition of project traffic, the study intersections would continue to operate at LOS D with the exception of the Blaine Road / Birch Bay-Lynden Road, Harborview Road / Lincoln Road, and Blaine Road / Drayton Harbor Road intersections. The Blaine Road / Birch Bay-Lynden Road intersection is anticipated to continue to operate at LOS F from without-project to with-project conditions with the addition of approximately 21 seconds of delay. The County has been considering a roundabout for this intersection as the future improvement. The Harborview Road / Lincoln Road intersection is anticipated to degrade from LOS E under without-predict conditions to LOS F under with project conditions during the weekday PM peak hour with approximately 43 additional seconds of delay. This intersection could be improved with the installation of all-way stop-control. The Blaine Road / Drayton Harbor Road intersection is anticipated to continue to operate at LOS F and a southbound right turn lane would improve the operations to acceptable levels.

Site Access Analysis

The proposed project has two proposed accesses; the first via a new west leg of the Semiahmoo Parkway/Gleneagle intersection and the second access along Semiahmoo Drive/Drayton Harbor Road, west of the Semiahmoo Parkway / Semiahmoo Drive intersection (see Figure 2).

As shown in Table 4 above, the proposed site accesses operate at LOS C or better under with-project conditions during the weekday PM peak hour.

The potential need for left- and right-turn lanes were identified using Washington State Department of Transportation (WSDOT) guidelines Exhibits1310-7a and 1310-11, respectively, which are shown in Appendix D. A left-turn lane is not needed for capacity at either site access per Exhibit 1310-7a as the total entering volumes are below 300 vehicles at both site access intersections (see Figure 6) and left-turn volumes into the site accesses are

less than 30 vehicles, or less than 15 percent of the total volumes. Additionally, no right-turn lane is recommended per Exhibit 1310-11 for the site accesses as the peak approach (through plus right-turn) volumes at either site access are less than 100 vehicles with at most 25 right-turn vehicles.

Non-Motorized Facilities

The internal roadway through the project site would provide pedestrian and bicycle access to and from Semiahmoo Drive and Semiahmoo Parkway and connection to the regional and community trail system. Additionally, pedestrian and bicycle facilities would be provided including connections to and from the Semiahmoo Spit.

As noted above under the planned improvements section, safety improvements to the Semiahmoo Spit pedestrian path from the County Park to the Marina have been identified; however, this is currently an unfunded project.

Mitigation

As discussed above, the Project would impact traffic operations at three study intersections that operate below LOS D. Transportation impacts are proposed to be mitigated through contributing their proportionate share toward the future improvement as these locations along with the Peace Portal/Bell Road signalization project.

Table 5 provides detail related to the proposed mitigation measures for impacted locations and how those improvements would improve levels of service.[2].

Table 5. Transportation Mitigation Improvements

	2020 LOS[1]			2020		Proportionate Share based on Total Traffic		
Impact Type	**Without-Project**	**With-Project**	**Recommended Improvement**	**Mitigated LOS**	**Planning Level Estimated Cost**	**Percent Project Share of Total**	**Project Cost Share**	**Cost Per Trip**
4. Drayton Harbor Road/ Blaine Road								
Operations	F	F	Provide a southbound right-turn lane	C	$100,000	4.7%	$4,700	$31.97
6. Lincoln Road/ Harborview Road								
Operations	E	F	All-way stop control. Additional warning signs or flashing light may be needed along Harborview Road.	C	$5,000	8.8%	$440	$2.99
9. Birch Bay-Lynden Road/ Blaine Road								
Operations	F	F	Install a single lane roundabout	B	$750,000	3.4%	$25,500	$173.47
Peace Portal Drive/ Bell Road[2]								
					$720,000	2.8%	$20,160	$137.14

1. Level of service (LOS), based on 2010 *Highway Capacity Manual* methodology
2. Based on higher trip generation scenario (Option 2) as shown in Table 3 and described in the *Semiahmoo Zone 3/Burnside Village—Proportionate Share Peace Portal/Bell Road Memorandum* (August 2016).

[2] These transportation mitigation improvements are consistent with the *Semiahmoo Master Plan* (March 2014).

Findings and Recommendations

General findings and recommendations of the transportation impact analysis are summarized below.

- The proposed project would construct 44 single family dwelling units, 22 duplex units (equivalent to 44 single family dwelling units), 41 multi-family units, 5,000 square-feet of retail, and 24,000 square-feet of storage providing 60 storage units. In addition, a 1.75-acre area of the site would either be constructed as City park or as residential including 7 single family dwelling units and 4 duplex units.

- The proposed residential project would generate approximately 138 to147 new weekday PM peak hour vehicular trips with approximately 84 to 90 inbound and 54 to 57 outbound trips, depending on if the 1.75-acre area of the site is developed as a park or as residential, respectively.

- Access to the project site would be provided via two site accesses, one via a new west leg of the Semiahmoo Parkway/Gleneagle intersection and the other access along Semiahmoo Drive/Drayton Harbor Road, west of the Semiahmoo Parkway / Semiahmoo Drive intersection. Both site access intersections would operate at LOS C or better during the weekday PM peak hours and neither location meets left- or right-turn lane warrants.

- Mitigation would include paying the City's transportation impact fees along with proportional share contributions to four intersection improvement projects.

Appendix A: Traffic Counts

SEMIAHMOO PKWY
SEMIAHMOO DR

Date: Wed, May 11, 2016
Count Period: 4:00 PM to 6:00 PM
Peak Hour: 4:00 PM to 5:00 PM

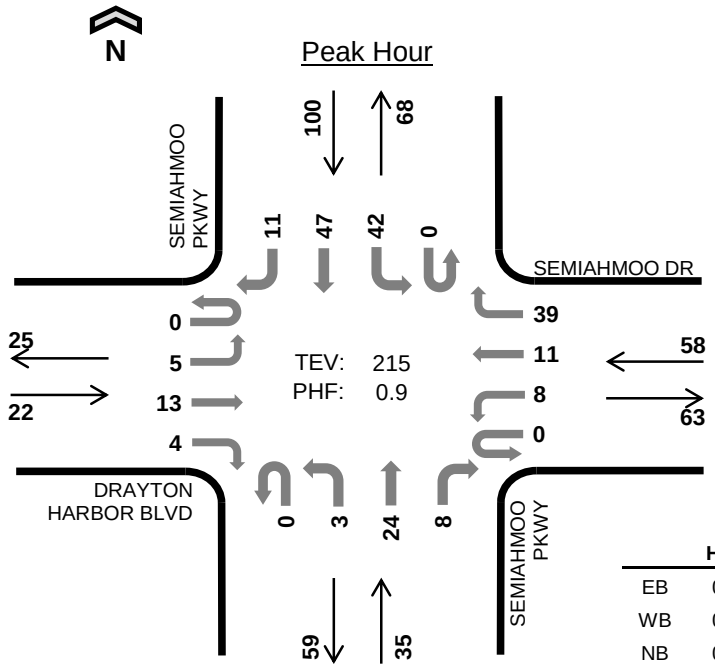

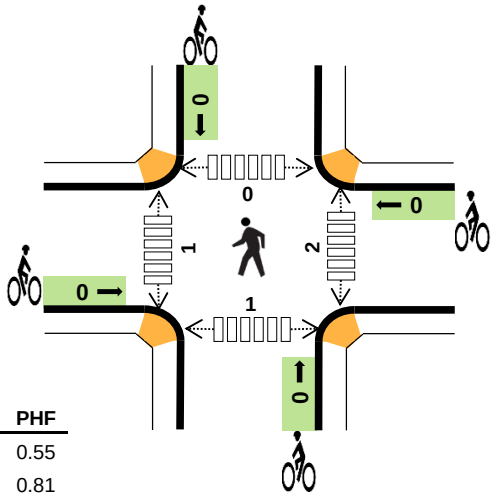

	HV %:	PHF
EB	0.0%	0.55
WB	0.0%	0.81
NB	0.0%	0.67
SB	0.0%	0.83
TOTAL	0.0%	0.90

Two-Hour Count Summaries

Interval Start	DRAYTON HARBOR BLVD				SEMIAHMOO DR				SEMIAHMOO PKWY				SEMIAHMOO PKWY				15-min Total	Rolling One Hour
	Eastbound				Westbound				Northbound				Southbound					
	UT	LT	TH	RT	UT	LT	TH	RT	UT	LT	TH	RT	UT	LT	TH	RT		
4:00 PM	**0**	**3**	**6**	**1**	**0**	**2**	**4**	**9**	**0**	**0**	**10**	**3**	**0**	**6**	**16**	**0**	**60**	0
4:15 PM	**0**	**0**	**1**	**0**	**0**	**5**	**3**	**9**	**0**	**1**	**3**	**0**	**0**	**16**	**8**	**5**	**51**	0
4:30 PM	**0**	**0**	**1**	**1**	**0**	**0**	**2**	**6**	**0**	**1**	**5**	**5**	**0**	**13**	**13**	**4**	**51**	0
4:45 PM	**0**	**2**	**5**	**2**	**0**	**1**	**2**	**15**	**0**	**1**	**6**	**0**	**0**	**7**	**10**	**2**	**53**	**215**
5:00 PM	0	0	1	1	0	2	2	6	0	3	7	0	0	9	8	2	41	196
5:15 PM	0	0	2	1	0	1	5	7	0	4	4	0	0	4	2	0	30	175
5:30 PM	0	0	0	0	0	2	5	8	0	2	6	2	0	13	6	1	45	169
5:45 PM	0	1	0	1	0	0	3	5	0	0	2	4	0	6	10	0	32	148
Count Total	0	6	16	7	0	13	26	65	0	12	43	14	0	74	73	14	363	0
Peak Hour	**0**	**5**	**13**	**4**	**0**	**8**	**11**	**39**	**0**	**3**	**24**	**8**	**0**	**42**	**47**	**11**	**215**	**0**

Note: Two-hour count summary volumes include heavy vehicles but exclude bicycles in overall count.

Interval Start	Heavy Vehicle Totals					Bicycles					Pedestrians (Crossing Leg)				
	EB	WB	NB	SB	Total	EB	WB	NB	SB	Total	East	West	North	South	Total
4:00 PM	**0**	**0**	**0**	**0**	***0***	**0**	**0**	**0**	**0**	***0***	**0**	**1**	**0**	**1**	*2*
4:15 PM	**0**	**0**	**0**	**0**	***0***	**0**	**0**	**0**	**0**	***0***	**2**	**0**	**0**	**0**	*2*
4:30 PM	**0**	**0**	**0**	**0**	***0***	**0**	**0**	**0**	**0**	***0***	**0**	**0**	**0**	**0**	*0*
4:45 PM	**0**	**0**	**0**	**0**	***0***	**0**	**0**	**0**	**0**	***0***	**0**	**0**	**0**	**0**	***0***
5:00 PM	0	0	1	0	*1*	0	0	0	0	*0*	0	0	0	0	*0*
5:15 PM	0	0	0	0	*0*	0	0	0	0	*0*	0	0	0	0	*0*
5:30 PM	0	0	1	0	*1*	0	0	0	0	*0*	0	0	0	0	*0*
5:45 PM	0	0	1	0	*1*	0	0	0	0	*0*	0	0	0	0	*0*
Count Total	0	0	3	0	*3*	0	0	0	0	*0*	2	1	0	1	*4*
Peak Hour	**0**	**0**	**0**	**0**	***0***	**0**	**0**	**0**	**0**	***0***	**2**	**1**	**0**	**1**	***4***

SEMIAHMOO PKWY
GLENEAGLE DR

Date: Wed, May 11, 2016
Count Period: 4:00 PM to 6:00 PM
Peak Hour: 4:00 PM to 5:00 PM

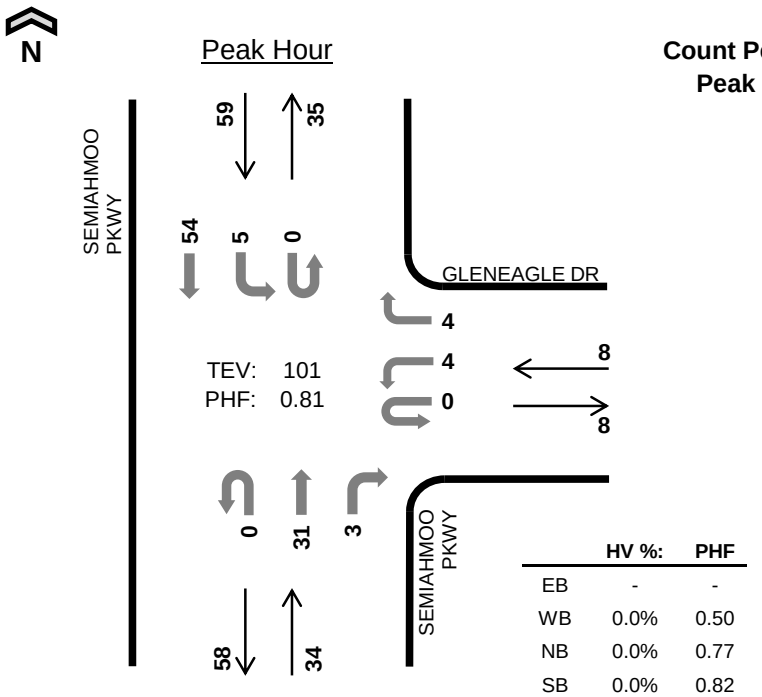

	HV %:	PHF
EB	-	-
WB	0.0%	0.50
NB	0.0%	0.77
SB	0.0%	0.82
TOTAL	0.0%	0.81

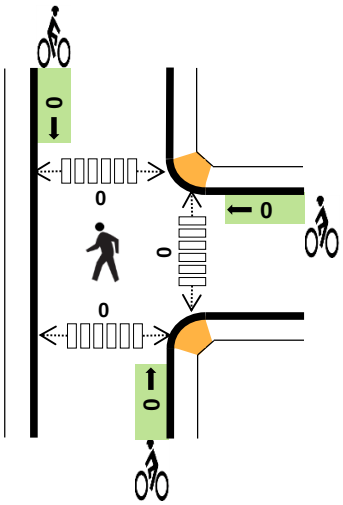

Two-Hour Count Summaries

Interval Start	0				GLENEAGLE DR				SEMIAHMOO PKWY				SEMIAHMOO PKWY				15-min Total	Rolling One Hour
	Eastbound				Westbound				Northbound				Southbound					
	UT	LT	TH	RT	UT	LT	TH	RT	UT	LT	TH	RT	UT	LT	TH	RT		
4:00 PM	**0**	**0**	**0**	**0**	**0**	**1**	**0**	**1**	**0**	**0**	**11**	**0**	**0**	**1**	**17**	**0**	**31**	0
4:15 PM	**0**	**0**	**0**	**0**	**0**	**1**	**0**	**0**	**0**	**0**	**4**	**1**	**0**	**4**	**10**	**0**	**20**	0
4:30 PM	**0**	**0**	**0**	**0**	**0**	**1**	**0**	**3**	**0**	**0**	**8**	**2**	**0**	**0**	**14**	**0**	**28**	0
4:45 PM	**0**	**0**	**0**	**0**	**0**	**1**	**0**	**0**	**0**	**0**	**8**	**0**	**0**	**0**	**13**	**0**	**22**	**101**
5:00 PM	0	0	0	0	0	1	0	0	0	0	11	0	0	1	11	0	24	94
5:15 PM	0	0	0	0	0	0	0	0	0	0	7	0	0	0	4	0	11	85
5:30 PM	0	0	0	0	0	0	0	1	0	0	8	0	1	2	5	0	17	74
5:45 PM	0	0	0	0	0	1	0	1	0	0	6	0	0	0	11	0	19	71
Count Total	0	0	0	0	0	6	0	6	0	0	63	3	1	8	85	0	172	0
Peak Hour	**0**	**0**	**0**	**0**	**0**	**4**	**0**	**4**	**0**	**0**	**31**	**3**	**0**	**5**	**54**	**0**	**101**	**0**

Note: Two-hour count summary volumes include heavy vehicles but exclude bicycles in overall count.

Interval Start	Heavy Vehicle Totals					Bicycles					Pedestrians (Crossing Leg)				
	EB	WB	NB	SB	Total	EB	WB	NB	SB	Total	East	West	North	South	Total
4:00 PM	**0**	**0**	**0**	**0**	***0***	**0**	**0**	**0**	**0**	***0***	**0**	**0**	**0**	**0**	*0*
4:15 PM	**0**	**0**	**0**	**0**	***0***	**0**	**0**	**0**	**0**	***0***	**0**	**0**	**0**	**0**	*0*
4:30 PM	**0**	**0**	**0**	**0**	***0***	**0**	**0**	**0**	**0**	***0***	**0**	**0**	**0**	**0**	*0*
4:45 PM	**0**	**0**	**0**	**0**	***0***	**0**	**0**	**0**	**0**	***0***	**0**	**0**	**0**	**0**	***0***
5:00 PM	0	0	1	0	*1*	0	0	0	0	*0*	0	0	0	0	*0*
5:15 PM	0	0	0	0	*0*	0	0	0	0	*0*	0	0	0	0	*0*
5:30 PM	0	0	1	0	*1*	0	0	0	0	*0*	0	0	0	0	*0*
5:45 PM	0	1	1	0	*2*	0	0	0	0	*0*	0	0	0	0	*0*
Count Total	0	1	3	0	*4*	0	0	0	0	*0*	0	0	0	0	*0*
Peak Hr	**0**	**0**	**0**	**0**	***0***	**0**	**0**	**0**	**0**	***0***	**0**	**0**	**0**	**0**	***0***

HARBORVIEW RD
DRAYTON HARBOR RD

N

Peak Hour

Date: Thu, Sep 01, 2016
Count Period: 4:00 PM to 6:00 PM
Peak Hour: 4:45 PM to 5:45 PM

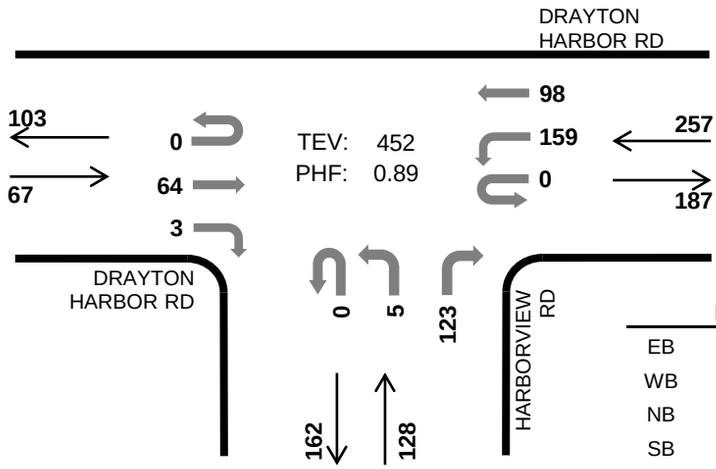

	HV %:	PHF
EB	1.5%	0.70
WB	0.0%	0.82
NB	0.8%	0.82
SB	-	-
TOTAL	0.4%	0.89

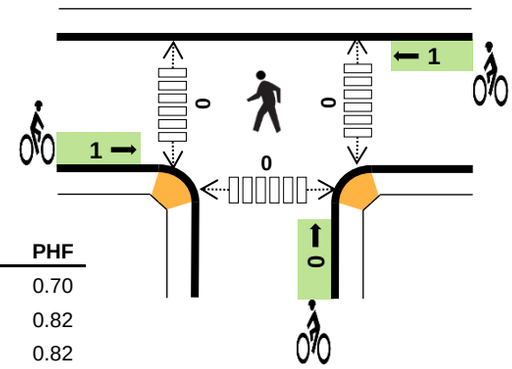

Two-Hour Count Summaries

Interval Start	DRAYTON HARBOR RD				DRAYTON HARBOR RD				HARBORVIEW RD				0				15-min Total	Rolling One Hour
	Eastbound				Westbound				Northbound				Southbound					
	UT	LT	TH	RT	UT	LT	TH	RT	UT	LT	TH	RT	UT	LT	TH	RT		
4:00 PM	0	0	17	1	0	52	20	0	0	0	0	24	0	0	0	0	114	0
4:15 PM	0	0	21	3	0	52	30	0	0	0	0	23	0	0	0	0	129	0
4:30 PM	0	0	17	0	0	40	19	0	1	1	0	22	0	0	0	0	100	0
4:45 PM	**0**	**0**	**23**	**1**	**0**	**35**	**19**	**0**	**0**	**0**	**0**	**25**	**0**	**0**	**0**	**0**	**103**	446
5:00 PM	**0**	**0**	**13**	**2**	**0**	**28**	**30**	**0**	**0**	**1**	**0**	**34**	**0**	**0**	**0**	**0**	**108**	440
5:15 PM	**0**	**0**	**10**	**0**	**0**	**56**	**22**	**0**	**0**	**2**	**0**	**37**	**0**	**0**	**0**	**0**	**127**	438
5:30 PM	**0**	**0**	**18**	**0**	**0**	**40**	**27**	**0**	**0**	**2**	**0**	**27**	**0**	**0**	**0**	**0**	**114**	**452**
5:45 PM	0	0	16	2	0	37	22	0	0	0	0	23	0	0	0	0	100	449
Count Total	0	0	135	9	0	340	189	0	1	6	0	215	0	0	0	0	895	0
Peak Hour	**0**	**0**	**64**	**3**	**0**	**159**	**98**	**0**	**0**	**5**	**0**	**123**	**0**	**0**	**0**	**0**	**452**	**0**

Note: Two-hour count summary volumes include heavy vehicles but exclude bicycles in overall count.

Interval Start	Heavy Vehicle Totals					Bicycles					Pedestrians (Crossing Leg)				
	EB	WB	NB	SB	Total	EB	WB	NB	SB	Total	East	West	North	South	Total
4:00 PM	0	0	0	0	*0*	0	0	0	0	*0*	0	0	0	0	*0*
4:15 PM	0	0	0	0	*0*	0	0	0	0	*0*	0	0	0	0	*0*
4:30 PM	0	0	0	0	*0*	0	0	0	0	*0*	0	0	0	0	*0*
4:45 PM	**1**	**0**	**0**	**0**	***1***	**0**	**1**	**0**	**0**	***1***	**0**	**0**	**0**	**0**	*0*
5:00 PM	**0**	**0**	**0**	**0**	***0***	**1**	**0**	**0**	**0**	***1***	**0**	**0**	**0**	**0**	*0*
5:15 PM	**0**	**0**	**0**	**0**	***0***	**0**	**0**	**0**	**0**	***0***	**0**	**0**	**0**	**0**	*0*
5:30 PM	**0**	**0**	**1**	**0**	***1***	**0**	**0**	**0**	**0**	***0***	**0**	**0**	**0**	**0**	***0***
5:45 PM	0	0	0	0	*0*	0	0	0	0	*0*	0	0	0	0	*0*
Count Total	1	0	1	0	*2*	1	1	0	0	*2*	0	0	0	0	*0*
Peak Hr	**1**	**0**	**1**	**0**	***2***	**1**	**1**	**0**	**0**	***2***	**0**	**0**	**0**	**0**	***0***

BLAINE RD
DRAYTON HARBOR RD

Date: Thu, Sep 01, 2016
Count Period: 4:00 PM to 6:00 PM
Peak Hour: 5:00 PM to 6:00 PM

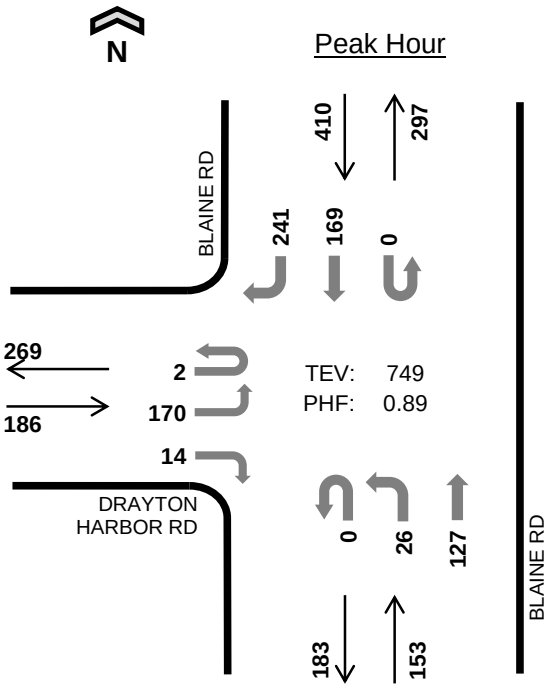

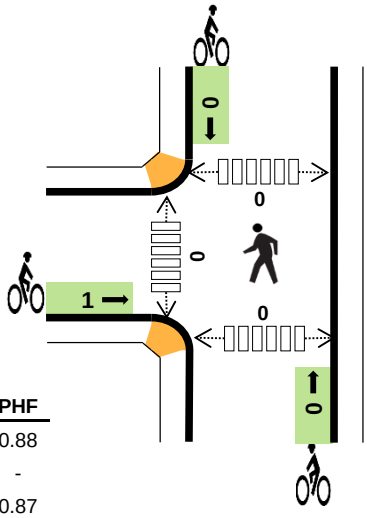

	HV %:	PHF
EB	0.5%	0.88
WB	-	-
NB	0.0%	0.87
SB	0.0%	0.88
TOTAL	0.1%	0.89

Two-Hour Count Summaries

Interval Start	DRAYTON HARBOR RD				0				BLAINE RD				BLAINE RD				15-min Total	Rolling One Hour
	Eastbound				Westbound				Northbound				Southbound					
	UT	LT	TH	RT	UT	LT	TH	RT	UT	LT	TH	RT	UT	LT	TH	RT		
4:00 PM	0	37	0	4	0	0	0	0	0	15	23	0	0	0	23	62	164	0
4:15 PM	0	38	0	4	0	0	0	0	0	7	24	0	0	0	22	74	169	0
4:30 PM	0	38	0	7	0	0	0	0	0	7	25	0	0	0	51	48	176	0
4:45 PM	0	45	0	7	0	0	0	0	0	5	30	0	0	0	34	52	173	682
5:00 PM	**1**	**39**	**0**	**3**	**0**	**0**	**0**	**0**	**0**	**13**	**30**	**0**	**0**	**0**	**33**	**47**	**166**	684
5:15 PM	**0**	**49**	**0**	**4**	**0**	**0**	**0**	**0**	**0**	**3**	**41**	**0**	**0**	**0**	**38**	**75**	**210**	725
5:30 PM	**1**	**38**	**0**	**5**	**0**	**0**	**0**	**0**	**0**	**5**	**24**	**0**	**0**	**0**	**52**	**65**	**190**	739
5:45 PM	**0**	**44**	**0**	**2**	**0**	**0**	**0**	**0**	**0**	**5**	**32**	**0**	**0**	**0**	**46**	**54**	**183**	**749**
Count Total	2	328	0	36	0	0	0	0	0	60	229	0	0	0	299	477	1,431	0
Peak Hour	**2**	**170**	**0**	**14**	**0**	**0**	**0**	**0**	**0**	**26**	**127**	**0**	**0**	**0**	**169**	**241**	**749**	**0**

Note: Two-hour count summary volumes include heavy vehicles but exclude bicycles in overall count.

Interval Start	Heavy Vehicle Totals					Bicycles					Pedestrians (Crossing Leg)				
	EB	WB	NB	SB	Total	EB	WB	NB	SB	Total	East	West	North	South	Total
4:00 PM	1	0	0	0	*1*	0	0	0	0	*0*	0	0	0	0	*0*
4:15 PM	0	0	0	0	*0*	0	0	0	0	*0*	0	0	0	0	*0*
4:30 PM	0	0	0	0	*0*	0	0	0	0	*0*	0	0	0	0	*0*
4:45 PM	1	0	0	1	*2*	0	0	0	1	*1*	0	0	0	0	*0*
5:00 PM	**0**	**0**	**0**	**0**	***0***	**1**	**0**	**0**	**0**	***1***	**0**	**0**	**0**	**0**	*0*
5:15 PM	**0**	**0**	**0**	**0**	***0***	**0**	**0**	**0**	**0**	***0***	**0**	**0**	**0**	**0**	*0*
5:30 PM	**1**	**0**	**0**	**0**	***1***	**0**	**0**	**0**	**0**	***0***	**0**	**0**	**0**	**0**	*0*
5:45 PM	**0**	**0**	**0**	**0**	***0***	**0**	**0**	**0**	**0**	***0***	**0**	**0**	**0**	**0**	***0***
Count Total	3	0	0	1	*4*	1	0	0	1	*2*	0	0	0	0	*0*
Peak Hr	**1**	**0**	**0**	**0**	***1***	**1**	**0**	**0**	**0**	***1***	**0**	**0**	**0**	**0**	***0***

SHINTAFFER RD
LINCOLN RD

Date: Wed, Aug 24, 2016
Count Period: 4:00 PM to 6:00 PM
Peak Hour: 4:00 PM to 5:00 PM

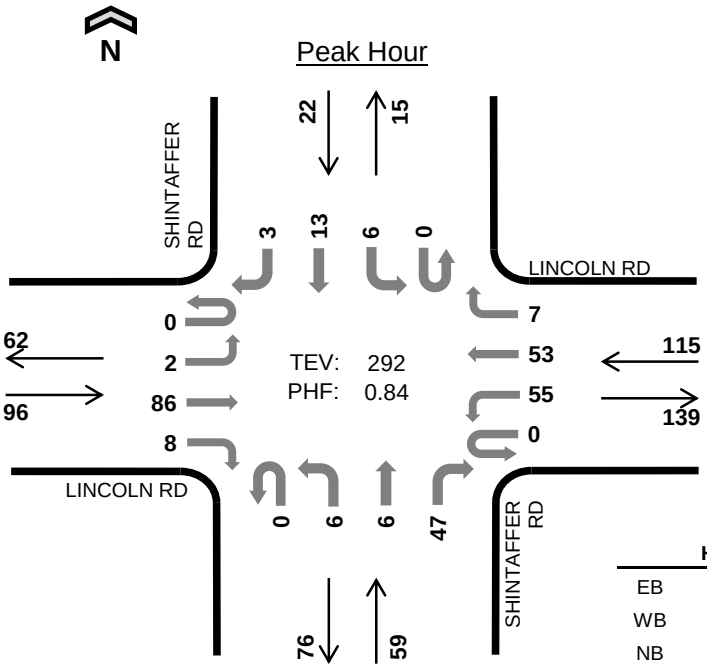

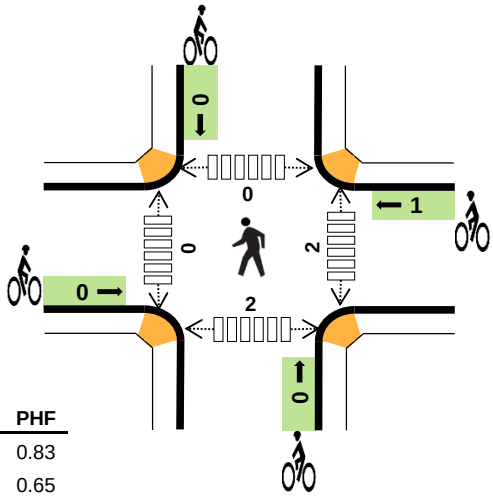

	HV %:	PHF
EB	1.0%	0.83
WB	0.0%	0.65
NB	0.0%	0.87
SB	0.0%	0.79
TOTAL	0.3%	0.84

Two-Hour Count Summaries

Interval Start	LINCOLN RD Eastbound				LINCOLN RD Westbound				SHINTAFFER RD Northbound				SHINTAFFER RD Southbound				15-min Total	Rolling One Hour
	UT	LT	TH	RT	UT	LT	TH	RT	UT	LT	TH	RT	UT	LT	TH	RT		
4:00 PM	**0**	**0**	**25**	**0**	**0**	**17**	**11**	**3**	**0**	**2**	**1**	**13**	**0**	**3**	**2**	**0**	**77**	0
4:15 PM	**0**	**1**	**28**	**0**	**0**	**6**	**12**	**1**	**0**	**2**	**2**	**12**	**0**	**1**	**4**	**0**	**69**	0
4:30 PM	**0**	**0**	**18**	**3**	**0**	**22**	**22**	**0**	**0**	**0**	**1**	**16**	**0**	**2**	**3**	**0**	**87**	0
4:45 PM	**0**	**1**	**15**	**5**	**0**	**10**	**8**	**3**	**0**	**2**	**2**	**6**	**0**	**0**	**4**	**3**	**59**	**292**
5:00 PM	0	0	15	2	0	12	11	2	0	0	0	12	0	1	2	0	57	272
5:15 PM	0	0	16	1	0	19	14	2	0	1	0	9	0	0	1	0	63	266
5:30 PM	0	0	12	1	0	16	10	1	0	1	0	9	0	1	5	0	56	235
5:45 PM	0	1	9	3	0	14	8	1	0	1	1	8	0	0	2	0	48	224
Count Total	0	3	138	15	0	116	96	13	0	9	7	85	0	8	23	3	516	0
Peak Hour	**0**	**2**	**86**	**8**	**0**	**55**	**53**	**7**	**0**	**6**	**6**	**47**	**0**	**6**	**13**	**3**	**292**	**0**

Note: Two-hour count summary volumes include heavy vehicles but exclude bicycles in overall count.

Interval Start	Heavy Vehicle Totals					Bicycles					Pedestrians (Crossing Leg)				
	EB	WB	NB	SB	Total	EB	WB	NB	SB	Total	East	West	North	South	Total
4:00 PM	**0**	**0**	**0**	**0**	***0***	**0**	**1**	**0**	**0**	***1***	**0**	**0**	**0**	**0**	*0*
4:15 PM	**0**	**0**	**0**	**0**	***0***	**0**	**0**	**0**	**0**	***0***	**0**	**0**	**0**	**0**	*0*
4:30 PM	**1**	**0**	**0**	**0**	***1***	**0**	**0**	**0**	**0**	***0***	**0**	**0**	**0**	**0**	*0*
4:45 PM	**0**	**0**	**0**	**0**	***0***	**0**	**0**	**0**	**0**	***0***	**2**	**0**	**0**	**2**	***4***
5:00 PM	1	0	0	0	*1*	0	0	0	0	*0*	0	0	0	0	*0*
5:15 PM	0	0	0	0	*0*	1	0	0	0	*1*	0	1	0	1	*2*
5:30 PM	0	0	0	0	*0*	0	0	0	0	*0*	0	0	0	0	*0*
5:45 PM	0	1	0	0	*1*	0	0	0	0	*0*	1	1	1	1	*4*
Count Total	2	1	0	0	*3*	1	1	0	0	*2*	3	2	1	4	*10*
Peak Hour	**1**	**0**	**0**	**0**	***1***	**0**	**1**	**0**	**0**	***1***	**2**	**0**	**0**	**2**	***4***

HARBORVIEW RD
LINCOLN RD

Date: Wed, Aug 24, 2016
Count Period: 4:00 PM to 6:00 PM
Peak Hour: 4:00 PM to 5:00 PM

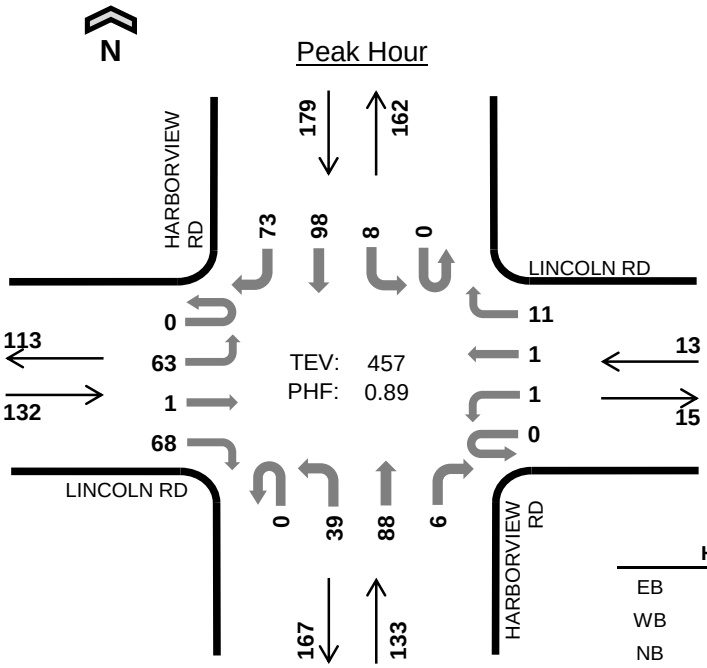

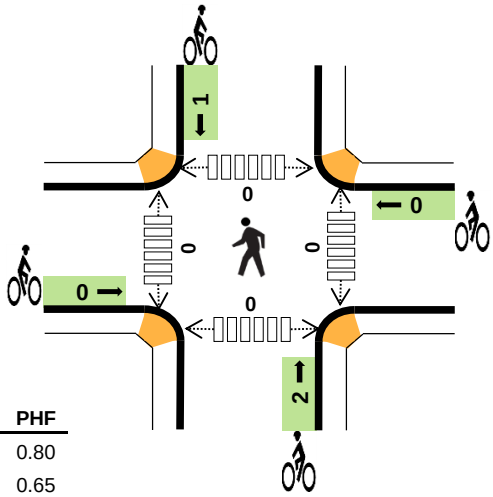

	HV %:	PHF
EB	0.8%	0.80
WB	0.0%	0.65
NB	0.0%	0.79
SB	0.0%	0.86
TOTAL	0.2%	0.89

Two-Hour Count Summaries

Interval Start	LINCOLN RD Eastbound				LINCOLN RD Westbound				HARBORVIEW RD Northbound				HARBORVIEW RD Southbound				15-min Total	Rolling One Hour
	UT	LT	TH	RT	UT	LT	TH	RT	UT	LT	TH	RT	UT	LT	TH	RT		
4:00 PM	**0**	**16**	**0**	**25**	**0**	**0**	**0**	**1**	**0**	**8**	**22**	**1**	**0**	**3**	**23**	**26**	**125**	0
4:15 PM	**0**	**20**	**1**	**17**	**0**	**1**	**0**	**4**	**0**	**8**	**21**	**1**	**0**	**1**	**17**	**11**	**102**	0
4:30 PM	**0**	**19**	**0**	**15**	**0**	**0**	**0**	**5**	**0**	**16**	**24**	**2**	**0**	**2**	**22**	**24**	**129**	0
4:45 PM	**0**	**8**	**0**	**11**	**0**	**0**	**1**	**1**	**0**	**7**	**21**	**2**	**0**	**2**	**36**	**12**	**101**	**457**
5:00 PM	0	11	1	12	0	1	0	2	0	11	23	1	0	1	25	15	103	435
5:15 PM	0	21	1	6	0	1	0	3	0	16	16	4	0	2	25	19	114	447
5:30 PM	0	13	1	10	0	0	1	0	0	7	19	2	0	3	24	14	94	412
5:45 PM	0	8	0	7	0	0	0	4	0	8	14	0	0	3	31	13	88	399
Count Total	0	116	4	103	0	3	2	20	0	81	160	13	0	17	203	134	856	0
Peak Hour	**0**	**63**	**1**	**68**	**0**	**1**	**1**	**11**	**0**	**39**	**88**	**6**	**0**	**8**	**98**	**73**	**457**	**0**

Note: Two-hour count summary volumes include heavy vehicles but exclude bicycles in overall count.

Interval Start	Heavy Vehicle Totals					Bicycles					Pedestrians (Crossing Leg)				
	EB	WB	NB	SB	Total	EB	WB	NB	SB	Total	East	West	North	South	Total
4:00 PM	**0**	**0**	**0**	**0**	***0***	**0**	**0**	**1**	**1**	***2***	**0**	**0**	**0**	**0**	*0*
4:15 PM	**0**	**0**	**0**	**0**	***0***	**0**	**0**	**0**	**0**	***0***	**0**	**0**	**0**	**0**	*0*
4:30 PM	**1**	**0**	**0**	**0**	***1***	**0**	**0**	**1**	**0**	***1***	**0**	**0**	**0**	**0**	*0*
4:45 PM	**0**	**0**	**0**	**0**	***0***	**0**	**0**	**0**	**0**	***0***	**0**	**0**	**0**	**0**	***0***
5:00 PM	0	0	0	0	*0*	0	0	0	1	*1*	0	0	0	0	*0*
5:15 PM	0	0	1	0	*1*	2	0	1	0	*3*	0	0	0	0	*0*
5:30 PM	0	0	0	1	*1*	0	0	0	0	*0*	0	0	0	0	*0*
5:45 PM	0	0	0	0	*0*	0	0	0	0	*0*	0	0	0	0	*0*
Count Total	1	0	1	1	*3*	2	0	3	2	*7*	0	0	0	0	*0*
Peak Hour	**1**	**0**	**0**	**0**	***1***	**0**	**0**	**2**	**1**	***3***	**0**	**0**	**0**	**0**	***0***

HARBORVIEW RD
ANDERSON RD

Date: Wed, Aug 24, 2016
Count Period: 4:00 PM to 6:00 PM
Peak Hour: 4:00 PM to 5:00 PM

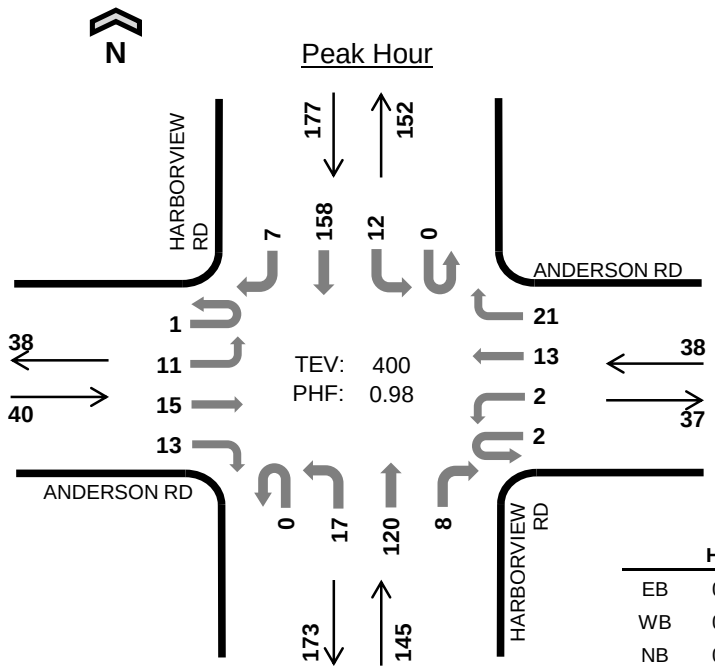

	HV %:	PHF
EB	0.0%	0.77
WB	0.0%	0.86
NB	0.0%	0.84
SB	0.6%	0.87
TOTAL	0.3%	0.98

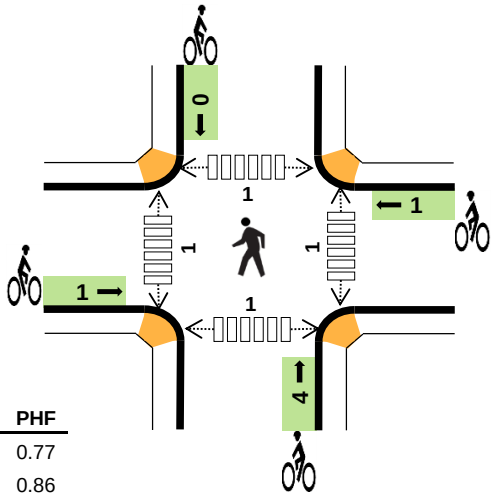

Two-Hour Count Summaries

Interval Start	ANDERSON RD Eastbound				ANDERSON RD Westbound				HARBORVIEW RD Northbound				HARBORVIEW RD Southbound				15-min Total	Rolling One Hour
	UT	LT	TH	RT	UT	LT	TH	RT	UT	LT	TH	RT	UT	LT	TH	RT		
4:00 PM	**0**	**3**	**5**	**1**	**0**	**1**	**4**	**3**	**0**	**1**	**29**	**3**	**0**	**7**	**43**	**1**	**101**	0
4:15 PM	**0**	**1**	**2**	**3**	**0**	**1**	**5**	**5**	**0**	**6**	**37**	**0**	**0**	**2**	**36**	**2**	**100**	0
4:30 PM	**0**	**3**	**5**	**4**	**0**	**0**	**3**	**8**	**0**	**5**	**25**	**5**	**0**	**0**	**42**	**2**	**102**	0
4:45 PM	**1**	**4**	**3**	**5**	**2**	**0**	**1**	**5**	**0**	**5**	**29**	**0**	**0**	**3**	**37**	**2**	**97**	**400**
5:00 PM	0	1	3	1	0	3	3	6	0	4	35	1	0	2	30	1	90	389
5:15 PM	0	4	1	1	0	2	7	4	0	3	35	1	0	1	29	3	91	380
5:30 PM	0	0	3	0	0	2	5	3	0	5	27	4	0	3	27	1	80	358
5:45 PM	0	1	1	0	0	4	9	2	0	5	24	3	0	1	32	2	84	345
Count Total	1	17	23	15	2	13	37	36	0	34	241	17	0	19	276	14	745	0
Peak Hour	**1**	**11**	**15**	**13**	**2**	**2**	**13**	**21**	**0**	**17**	**120**	**8**	**0**	**12**	**158**	**7**	**400**	**0**

Note: Two-hour count summary volumes include heavy vehicles but exclude bicycles in overall count.

Interval Start	Heavy Vehicle Totals					Bicycles					Pedestrians (Crossing Leg)				
	EB	WB	NB	SB	Total	EB	WB	NB	SB	Total	East	West	North	South	Total
4:00 PM	**0**	**0**	**0**	**0**	***0***	**1**	**1**	**1**	**0**	***3***	**0**	**0**	**0**	**0**	*0*
4:15 PM	**0**	**0**	**0**	**0**	***0***	**0**	**0**	**1**	**0**	***1***	**0**	**0**	**0**	**0**	*0*
4:30 PM	**0**	**0**	**0**	**1**	***1***	**0**	**0**	**1**	**0**	***1***	**0**	**0**	**0**	**0**	*0*
4:45 PM	**0**	**0**	**0**	**0**	***0***	**0**	**0**	**1**	**0**	***1***	**1**	**1**	**1**	**1**	***4***
5:00 PM	0	0	0	0	*0*	0	0	0	1	*1*	1	0	0	0	*1*
5:15 PM	0	0	1	0	*1*	0	0	1	0	*1*	0	1	0	0	*1*
5:30 PM	0	0	0	0	*0*	0	1	0	1	*2*	0	0	0	0	*0*
5:45 PM	0	0	0	0	*0*	0	0	0	0	*0*	0	2	0	2	*4*
Count Total	0	0	1	1	*2*	1	2	5	2	*10*	2	4	1	3	*10*
Peak Hour	**0**	**0**	**0**	**1**	***1***	**1**	**1**	**4**	**0**	***6***	**1**	**1**	**1**	**1**	***4***

HARBORVIEW RD
BIRCH BAY-LYNDEN RD

Date: Thu, Sep 01, 2016
Count Period: 4:00 PM to 6:00 PM
Peak Hour: 5:00 PM to 6:00 PM

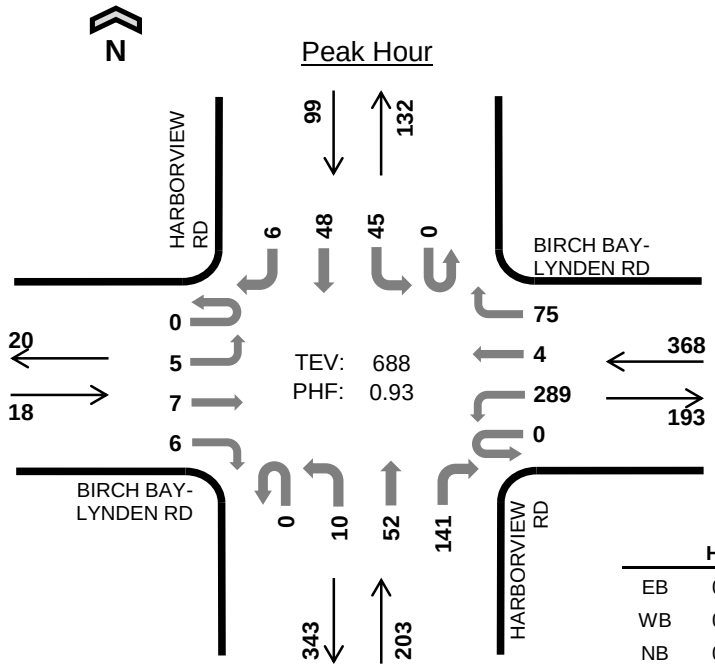

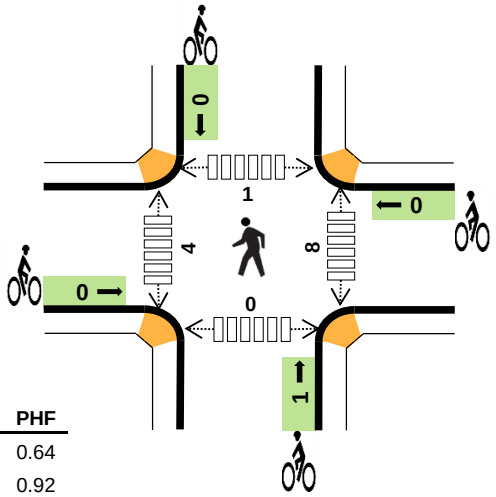

	HV %:	PHF
EB	0.0%	0.64
WB	0.0%	0.92
NB	0.0%	0.89
SB	2.0%	0.85
TOTAL	0.3%	0.93

Two-Hour Count Summaries

Interval Start	BIRCH BAY-LYNDEN RD Eastbound				BIRCH BAY-LYNDEN RD Westbound				HARBORVIEW RD Northbound				HARBORVIEW RD Southbound				15-min Total	Rolling One Hour
	UT	LT	TH	RT	UT	LT	TH	RT	UT	LT	TH	RT	UT	LT	TH	RT		
4:00 PM	0	2	1	1	0	47	4	25	0	0	10	36	0	13	12	1	152	0
4:15 PM	0	0	1	0	0	59	0	16	1	2	9	25	0	12	23	2	150	0
4:30 PM	0	2	0	3	0	67	3	31	0	1	11	39	0	9	11	1	178	0
4:45 PM	0	2	0	1	0	71	1	15	0	0	15	21	0	12	15	0	153	633
5:00 PM	**0**	**2**	**4**	**1**	**0**	**76**	**2**	**22**	**0**	**1**	**18**	**35**	**0**	**11**	**13**	**0**	**185**	666
5:15 PM	**0**	**2**	**1**	**2**	**0**	**69**	**2**	**17**	**0**	**1**	**12**	**33**	**0**	**8**	**11**	**2**	**160**	676
5:30 PM	**0**	**1**	**1**	**1**	**0**	**76**	**0**	**17**	**0**	**6**	**11**	**40**	**0**	**11**	**12**	**2**	**178**	676
5:45 PM	**0**	**0**	**1**	**2**	**0**	**68**	**0**	**19**	**0**	**2**	**11**	**33**	**0**	**15**	**12**	**2**	**165**	**688**
Count Total	0	11	9	11	0	533	12	162	1	13	97	262	0	91	109	10	1,321	0
Peak Hour	**0**	**5**	**7**	**6**	**0**	**289**	**4**	**75**	**0**	**10**	**52**	**141**	**0**	**45**	**48**	**6**	**688**	**0**

Note: Two-hour count summary volumes include heavy vehicles but exclude bicycles in overall count.

Interval Start	Heavy Vehicle Totals					Bicycles					Pedestrians (Crossing Leg)				
	EB	WB	NB	SB	Total	EB	WB	NB	SB	Total	East	West	North	South	Total
4:00 PM	0	1	0	0	*1*	0	1	0	0	*1*	0	0	0	0	*0*
4:15 PM	0	0	0	1	*1*	1	0	2	0	*3*	2	1	0	0	*3*
4:30 PM	0	2	0	0	*2*	0	0	1	2	*3*	0	0	0	0	*0*
4:45 PM	0	0	0	0	*0*	0	0	0	0	*0*	0	0	0	0	*0*
5:00 PM	**0**	**0**	**0**	**1**	***1***	**0**	**0**	**1**	**0**	***1***	**1**	**0**	**0**	**0**	*1*
5:15 PM	**0**	**0**	**0**	**0**	***0***	**0**	**0**	**0**	**0**	***0***	**3**	**0**	**0**	**0**	*3*
5:30 PM	**0**	**0**	**0**	**0**	***0***	**0**	**0**	**0**	**0**	***0***	**1**	**1**	**0**	**0**	*2*
5:45 PM	**0**	**0**	**0**	**1**	***1***	**0**	**0**	**0**	**0**	***0***	**3**	**3**	**1**	**0**	***7***
Count Total	0	3	0	3	*6*	1	1	4	2	*8*	10	5	1	0	*16*
Peak Hour	**0**	**0**	**0**	**2**	***2***	**0**	**0**	**1**	**0**	***1***	**8**	**4**	**1**	**0**	***13***

BLAINE RD (SR 548)
BIRCH BAY-LYNDEN RD

Date: Tue, Aug 02, 2016
Count Period: 4:00 PM to 6:00 PM
Peak Hour: 4:30 PM to 5:30 PM

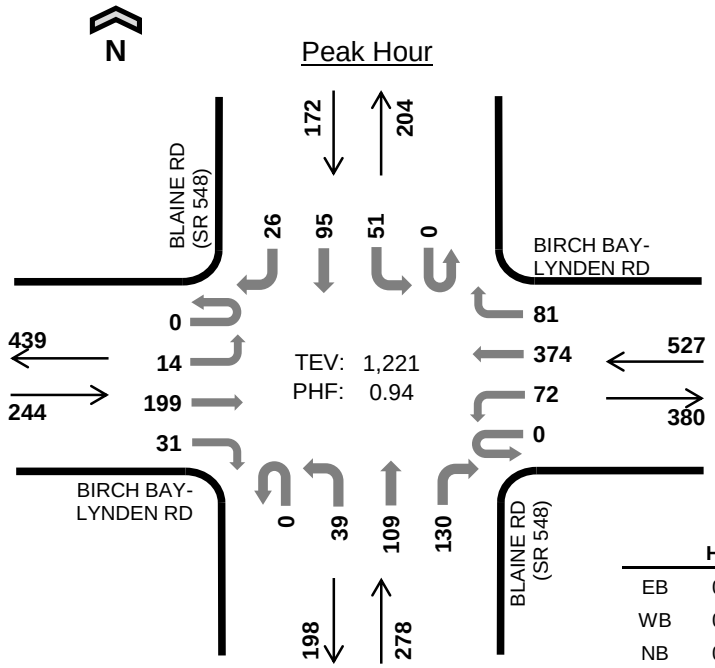

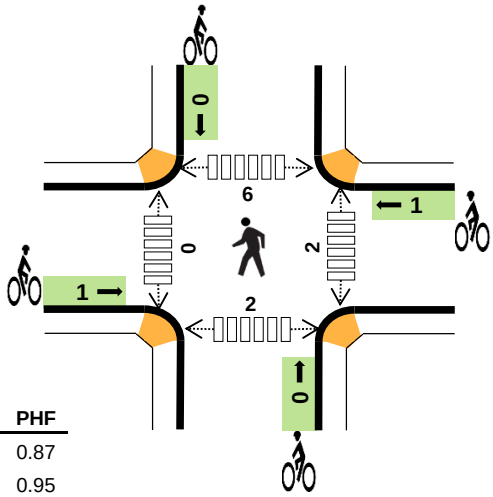

	HV %:	PHF
EB	0.0%	0.87
WB	0.4%	0.95
NB	0.0%	0.86
SB	0.0%	0.81
TOTAL	0.2%	0.94

Two-Hour Count Summaries

Interval Start	BIRCH BAY-LYNDEN RD Eastbound				BIRCH BAY-LYNDEN RD Westbound				BLAINE RD (SR 548) Northbound				BLAINE RD (SR 548) Southbound				15-min Total	Rolling One Hour
	UT	LT	TH	RT	UT	LT	TH	RT	UT	LT	TH	RT	UT	LT	TH	RT		
4:00 PM	0	7	53	7	0	18	90	11	0	6	15	25	0	15	20	4	271	0
4:15 PM	0	5	44	4	0	17	101	16	0	9	17	18	0	12	11	8	262	0
4:30 PM	**0**	**3**	**50**	**9**	**0**	**12**	**95**	**24**	**0**	**13**	**25**	**22**	**0**	**11**	**21**	**6**	**291**	0
4:45 PM	**0**	**4**	**44**	**4**	**0**	**23**	**88**	**21**	**0**	**8**	**24**	**27**	**0**	**13**	**33**	**7**	**296**	1,120
5:00 PM	**0**	**4**	**55**	**11**	**0**	**17**	**93**	**16**	**0**	**5**	**31**	**45**	**0**	**14**	**24**	**9**	**324**	1,173
5:15 PM	**0**	**3**	**50**	**7**	**0**	**20**	**98**	**20**	**0**	**13**	**29**	**36**	**0**	**13**	**17**	**4**	**310**	**1,221**
5:30 PM	0	1	49	6	0	20	98	29	0	8	16	16	1	13	16	1	274	1,204
5:45 PM	0	5	44	6	0	17	90	20	0	6	19	17	0	9	21	7	261	1,169
Count Total	0	32	389	54	0	144	753	157	0	68	176	206	1	100	163	46	2,289	0
Peak Hour	**0**	**14**	**199**	**31**	**0**	**72**	**374**	**81**	**0**	**39**	**109**	**130**	**0**	**51**	**95**	**26**	**1,221**	**0**

Note: Two-hour count summary volumes include heavy vehicles but exclude bicycles in overall count.

Interval Start	Heavy Vehicle Totals					Bicycles					Pedestrians (Crossing Leg)				
	EB	WB	NB	SB	Total	EB	WB	NB	SB	Total	East	West	North	South	Total
4:00 PM	0	1	0	1	*2*	0	0	0	0	*0*	0	0	0	0	*0*
4:15 PM	0	0	0	0	*0*	0	0	0	0	*0*	0	0	4	0	*4*
4:30 PM	**0**	**1**	**0**	**0**	***1***	**0**	**0**	**0**	**0**	***0***	**0**	**0**	**0**	**0**	*0*
4:45 PM	**0**	**0**	**0**	**0**	***0***	**1**	**1**	**0**	**0**	***2***	**0**	**0**	**1**	**2**	*3*
5:00 PM	**0**	**1**	**0**	**0**	***1***	**0**	**0**	**0**	**0**	***0***	**0**	**0**	**1**	**0**	*1*
5:15 PM	**0**	**0**	**0**	**0**	***0***	**0**	**0**	**0**	**0**	***0***	**2**	**0**	**4**	**0**	***6***
5:30 PM	0	0	0	0	*0*	0	0	0	0	*0*	0	0	0	0	*0*
5:45 PM	0	0	0	0	*0*	0	0	0	0	*0*	0	0	0	0	*0*
Count Total	0	3	0	1	*4*	1	1	0	0	*2*	2	0	10	2	*14*
Peak Hour	**0**	**2**	**0**	**0**	***2***	**1**	**1**	**0**	**0**	***2***	**2**	**0**	**6**	**2**	***10***

Appendix B: LOS Definitions

Highway Capacity Manual 2010

Signalized intersection level of service (LOS) is defined in terms of a weighted average control delay for the entire intersection. Control delay quantifies the increase in travel time that a vehicle experiences due to the traffic signal control as well as provides a surrogate measure for driver discomfort and fuel consumption. Signalized intersection LOS is stated in terms of average control delay per vehicle (in seconds) during a specified time period (e.g., weekday PM peak hour). Control delay is a complex measure based on many variables, including signal phasing and coordination (i.e., progression of movements through the intersection and along the corridor), signal cycle length, and traffic volumes with respect to intersection capacity and resulting queues. Table 1 summarizes the LOS criteria for signalized intersections, as described in the *Highway Capacity Manual 2010* (Transportation Research Board, 2010).

Table 1. Level of Service Criteria for Signalized Intersections

Level of Service	Average Control Delay (seconds/vehicle)	General Description
A	≤10	Free Flow
B	>10 – 20	Stable Flow (slight delays)
C	>20 – 35	Stable flow (acceptable delays)
D	>35 – 55	Approaching unstable flow (tolerable delay, occasionally wait through more than one signal cycle before proceeding)
E	>55 – 80	Unstable flow (intolerable delay)
F[1]	>80	Forced flow (congested and queues fail to clear)

Source: *Highway Capacity Manual 2010*, Transportation Research Board, 2010.

1. If the volume-to-capacity (v/c) ratio for a lane group exceeds 1.0 LOS F is assigned to the individual lane group. LOS for overall approach or intersection is determined solely by the control delay.

Unsignalized intersection LOS criteria can be further reduced into two intersection types: all-way stop and two-way stop control. All-way stop control intersection LOS is expressed in terms of the weighted average control delay of the overall intersection or by approach. Two-way stop-controlled intersection LOS is defined in terms of the average control delay for each minor-street movement (or shared movement) as well as major-street left-turns. This approach is because major-street through vehicles are assumed to experience zero delay, a weighted average of all movements results in very low overall average delay, and this calculated low delay could mask deficiencies of minor movements. Table 2 shows LOS criteria for unsignalized intersections.

Table 2. Level of Service Criteria for Unsignalized Intersections

Level of Service	Average Control Delay (seconds/vehicle)
A	0 – 10
B	>10 – 15
C	>15 – 25
D	>25 – 35
E	>35 – 50
F[1]	>50

Source: *Highway Capacity Manual 2010*, Transportation Research Board, 2010.

1. If the volume-to-capacity (v/c) ratio exceeds 1.0, LOS F is assigned an individual lane group for all unsignalized intersections, or minor street approach at two-way stop-controlled intersections. Overall intersection LOS is determined solely by control delay.

Appendix C: LOS Worksheets

Intersection	
Intersection Delay, s/veh	7.5
Intersection LOS	A

Movement	EBU	EBL	EBT	EBR	WBU	WBL	WBT	WBR	NBU	NBL	NBT	NBR
Lane Configurations												
Traffic Vol, veh/h	0	5	15	5	0	10	10	40	0	5	25	10
Future Vol, veh/h	0	5	15	5	0	10	10	40	0	5	25	10
Peak Hour Factor	0.90	0.90	0.90	0.90	0.90	0.90	0.90	0.90	0.90	0.90	0.90	0.90
Heavy Vehicles, %	0	0	0	0	0	0	0	0	0	0	0	0
Mvmt Flow	0	6	17	6	0	11	11	44	0	6	28	11
Number of Lanes	0	0	1	0	0	0	1	0	0	0	1	0

Approach	EB	WB	NB
Opposing Approach	WB	EB	SB
Opposing Lanes	1	1	1
Conflicting Approach Left	SB	NB	EB
Conflicting Lanes Left	1	1	1
Conflicting Approach Right	NB	SB	WB
Conflicting Lanes Right	1	1	1
HCM Control Delay	7.4	7.2	7.3
HCM LOS	A	A	A

Lane	NBLn1	EBLn1	WBLn1	SBLn1
Vol Left, %	12%	20%	17%	42%
Vol Thru, %	62%	60%	17%	47%
Vol Right, %	25%	20%	67%	11%
Sign Control	Stop	Stop	Stop	Stop
Traffic Vol by Lane	40	25	60	95
LT Vol	5	5	10	40
Through Vol	25	15	10	45
RT Vol	10	5	40	10
Lane Flow Rate	44	28	67	106
Geometry Grp	1	1	1	1
Degree of Util (X)	0.05	0.032	0.071	0.121
Departure Headway (Hd)	4.02	4.133	3.815	4.12
Convergence, Y/N	Yes	Yes	Yes	Yes
Cap	883	854	926	866
Service Time	2.081	2.215	1.892	2.165
HCM Lane V/C Ratio	0.05	0.033	0.072	0.122
HCM Control Delay	7.3	7.4	7.2	7.7
HCM Lane LOS	A	A	A	A
HCM 95th-tile Q	0.2	0.1	0.2	0.4

Intersection	
Intersection Delay, s/veh	
Intersection LOS	

Movement	SBU	SBL	SBT	SBR
Lane Configurations				
Traffic Vol, veh/h	0	40	45	10
Future Vol, veh/h	0	40	45	10
Peak Hour Factor	0.90	0.90	0.90	0.90
Heavy Vehicles, %	0	0	0	0
Mvmt Flow	0	44	50	11
Number of Lanes	0	0	1	0

Approach	SB
Opposing Approach	NB
Opposing Lanes	1
Conflicting Approach Left	WB
Conflicting Lanes Left	1
Conflicting Approach Right	EB
Conflicting Lanes Right	1
HCM Control Delay	7.7
HCM LOS	A

Intersection	
Int Delay, s/veh	1.2

Movement	WBL	WBR	NBT	NBR	SBL	SBT
Lane Configurations						
Traffic Vol, veh/h	5	5	30	5	5	55
Future Vol, veh/h	5	5	30	5	5	55
Conflicting Peds, #/hr	0	0	0	0	0	0
Sign Control	Stop	Stop	Free	Free	Free	Free
RT Channelized	-	None	-	None	-	None
Storage Length	0	-	-	-	-	-
Veh in Median Storage, #	0	-	0	-	-	0
Grade, %	0	-	0	-	-	0
Peak Hour Factor	81	81	81	81	81	81
Heavy Vehicles, %	0	0	0	0	0	0
Mvmt Flow	6	6	37	6	6	68

Major/Minor	Minor1		Major1		Major2	
Conflicting Flow All	120	40	0	0	43	0
Stage 1	40	-	-	-	-	-
Stage 2	80	-	-	-	-	-
Critical Hdwy	6.4	6.2	-	-	4.1	-
Critical Hdwy Stg 1	5.4	-	-	-	-	-
Critical Hdwy Stg 2	5.4	-	-	-	-	-
Follow-up Hdwy	3.5	3.3	-	-	2.2	-
Pot Cap-1 Maneuver	880	1037	-	-	1579	-
Stage 1	988	-	-	-	-	-
Stage 2	948	-	-	-	-	-
Platoon blocked, %			-	-		-
Mov Cap-1 Maneuver	876	1037	-	-	1579	-
Mov Cap-2 Maneuver	876	-	-	-	-	-
Stage 1	988	-	-	-	-	-
Stage 2	944	-	-	-	-	-

Approach	WB	NB	SB
HCM Control Delay, s	8.8	0	0.6
HCM LOS	A		

Minor Lane/Major Mvmt	NBT	NBR	WBLn1	SBL	SBT
Capacity (veh/h)	-	-	950	1579	-
HCM Lane V/C Ratio	-	-	0.013	0.004	-
HCM Control Delay (s)	-	-	8.8	7.3	0
HCM Lane LOS	-	-	A	A	A
HCM 95th %tile Q(veh)	-	-	0	0	-

Intersection	
Int Delay, s/veh	4.5

Movement	EBU	EBL	EBR	NBL	NBT	SBT	SBR
Lane Configurations							
Traffic Vol, veh/h	5	170	15	25	125	170	240
Future Vol, veh/h	5	170	15	25	125	170	240
Conflicting Peds, #/hr	0	0	0	0	0	0	0
Sign Control	Stop	Stop	Stop	Free	Free	Free	Free
RT Channelized	-	-	None	-	None	-	None
Storage Length	-	0	-	-	-	-	-
Veh in Median Storage, #	-	0	-	-	0	0	-
Grade, %	-	0	-	-	0	0	-
Peak Hour Factor	89	89	89	89	89	89	89
Heavy Vehicles, %	1	1	1	0	0	0	0
Mvmt Flow	6	191	17	28	140	191	270

Major/Minor	Minor2			Major1		Major2	
Conflicting Flow All	0	523	326	461	0	-	0
Stage 1	0	326	-	-	-	-	-
Stage 2	0	197	-	-	-	-	-
Critical Hdwy	-	6.41	6.21	4.1	-	-	-
Critical Hdwy Stg 1	-	5.41	-	-	-	-	-
Critical Hdwy Stg 2	-	5.41	-	-	-	-	-
Follow-up Hdwy	-	3.509	3.309	2.2	-	-	-
Pot Cap-1 Maneuver	0	516	718	1111	-	-	-
Stage 1	0	734	-	-	-	-	-
Stage 2	0	839	-	-	-	-	-
Platoon blocked, %	-				-	-	-
Mov Cap-1 Maneuver	0	502	718	1111	-	-	-
Mov Cap-2 Maneuver	0	502	-	-	-	-	-
Stage 1	0	734	-	-	-	-	-
Stage 2	0	816	-	-	-	-	-

Approach	EB	NB	SB
HCM Control Delay, s	16.6	1.4	0
HCM LOS	C		

Minor Lane/Major Mvmt	NBL	NBT	EBLn1	SBT	SBR
Capacity (veh/h)	1111	-	515	-	-
HCM Lane V/C Ratio	0.025	-	0.404	-	-
HCM Control Delay (s)	8.3	0	16.6	-	-
HCM Lane LOS	A	A	C	-	-
HCM 95th %tile Q(veh)	0.1	-	1.9	-	-

Intersection	
Int Delay, s/veh	4.3

Movement	EBL	EBT	EBR	WBL	WBT	WBR	NBL	NBT	NBR	SBL	SBT	SBR
Lane Configurations												
Traffic Vol, veh/h	5	85	10	55	55	5	5	5	45	5	15	5
Future Vol, veh/h	5	85	10	55	55	5	5	5	45	5	15	5
Conflicting Peds, #/hr	0	0	0	0	0	0	0	0	0	0	0	0
Sign Control	Free	Free	Free	Free	Free	Free	Stop	Stop	Stop	Stop	Stop	Stop
RT Channelized	-	-	None	-	-	None	-	-	None	-	-	None
Storage Length	-	-	-	250	-	-	-	-	-	-	-	-
Veh in Median Storage, #	-	0	-	-	0	-	-	0	-	-	0	-
Grade, %	-	0	-	-	0	-	-	0	-	-	0	-
Peak Hour Factor	84	84	84	84	84	84	84	84	84	84	84	84
Heavy Vehicles, %	1	1	1	0	0	0	0	0	0	0	0	0
Mvmt Flow	6	101	12	65	65	6	6	6	54	6	18	6

Major/Minor	Major1			Major2			Minor1			Minor2		
Conflicting Flow All	71	0	0	113	0	0	330	321	107	348	324	68
Stage 1	-	-	-	-	-	-	119	119	-	199	199	-
Stage 2	-	-	-	-	-	-	211	202	-	149	125	-
Critical Hdwy	4.11	-	-	4.1	-	-	7.1	6.5	6.2	7.1	6.5	6.2
Critical Hdwy Stg 1	-	-	-	-	-	-	6.1	5.5	-	6.1	5.5	-
Critical Hdwy Stg 2	-	-	-	-	-	-	6.1	5.5	-	6.1	5.5	-
Follow-up Hdwy	2.209	-	-	2.2	-	-	3.5	4	3.3	3.5	4	3.3
Pot Cap-1 Maneuver	1536	-	-	1489	-	-	627	599	953	610	597	1001
Stage 1	-	-	-	-	-	-	890	801	-	807	740	-
Stage 2	-	-	-	-	-	-	796	738	-	858	796	-
Platoon blocked, %		-	-		-	-						
Mov Cap-1 Maneuver	1536	-	-	1489	-	-	586	571	953	550	569	1001
Mov Cap-2 Maneuver	-	-	-	-	-	-	586	571	-	550	569	-
Stage 1	-	-	-	-	-	-	886	798	-	804	708	-
Stage 2	-	-	-	-	-	-	738	706	-	801	793	-

Approach	EB	WB	NB	SB
HCM Control Delay, s	0.4	3.6	9.6	11.1
HCM LOS			A	B

Minor Lane/Major Mvmt	NBLn1	EBL	EBT	EBR	WBL	WBT	WBR	SBLn1
Capacity (veh/h)	853	1536	-	-	1489	-	-	618
HCM Lane V/C Ratio	0.077	0.004	-	-	0.044	-	-	0.048
HCM Control Delay (s)	9.6	7.4	0	-	7.5	-	-	11.1
HCM Lane LOS	A	A	A	-	A	-	-	B
HCM 95th %tile Q(veh)	0.2	0	-	-	0.1	-	-	0.2

Intersection	
Int Delay, s/veh	4.5

Movement	EBL	EBT	EBR	WBL	WBT	WBR	NBL	NBT	NBR	SBL	SBT	SBR
Lane Configurations												
Traffic Vol, veh/h	65	5	70	5	5	10	40	90	5	10	100	75
Future Vol, veh/h	65	5	70	5	5	10	40	90	5	10	100	75
Conflicting Peds, #/hr	0	0	0	0	0	0	0	0	0	0	0	0
Sign Control	Stop	Stop	Stop	Stop	Stop	Stop	Free	Free	Free	Free	Free	Free
RT Channelized	-	-	None	-	-	None	-	-	None	-	-	None
Storage Length	375	-	-	-	-	-	200	-	-	-	-	-
Veh in Median Storage, #	-	0	-	-	0	-	-	0	-	-	0	-
Grade, %	-	0	-	-	0	-	-	0	-	-	0	-
Peak Hour Factor	89	89	89	89	89	89	89	89	89	89	89	89
Heavy Vehicles, %	1	1	1	0	0	0	0	0	0	0	0	0
Mvmt Flow	73	6	79	6	6	11	45	101	6	11	112	84

Major/Minor	Minor2			Minor1			Major1			Major2		
Conflicting Flow All	379	374	154	413	413	104	197	0	0	107	0	0
Stage 1	177	177	-	194	194	-	-	-	-	-	-	-
Stage 2	202	197	-	219	219	-	-	-	-	-	-	-
Critical Hdwy	7.11	6.51	6.21	7.1	6.5	6.2	4.1	-	-	4.1	-	-
Critical Hdwy Stg 1	6.11	5.51	-	6.1	5.5	-	-	-	-	-	-	-
Critical Hdwy Stg 2	6.11	5.51	-	6.1	5.5	-	-	-	-	-	-	-
Follow-up Hdwy	3.509	4.009	3.309	3.5	4	3.3	2.2	-	-	2.2	-	-
Pot Cap-1 Maneuver	580	558	895	553	532	956	1388	-	-	1497	-	-
Stage 1	827	755	-	812	744	-	-	-	-	-	-	-
Stage 2	802	740	-	788	726	-	-	-	-	-	-	-
Platoon blocked, %								-	-		-	-
Mov Cap-1 Maneuver	551	536	895	485	511	956	1388	-	-	1497	-	-
Mov Cap-2 Maneuver	551	536	-	485	511	-	-	-	-	-	-	-
Stage 1	800	749	-	786	720	-	-	-	-	-	-	-
Stage 2	761	716	-	708	720	-	-	-	-	-	-	-

Approach	EB	WB	NB	SB
HCM Control Delay, s	11	10.7	2.3	0.4
HCM LOS	B	B		

Minor Lane/Major Mvmt	NBL	NBT	NBR	EBLn1	EBLn2	WBLn1	SBL	SBT	SBR
Capacity (veh/h)	1388	-	-	551	857	655	1497	-	-
HCM Lane V/C Ratio	0.032	-	-	0.133	0.098	0.034	0.008	-	-
HCM Control Delay (s)	7.7	-	-	12.5	9.7	10.7	7.4	0	-
HCM Lane LOS	A	-	-	B	A	B	A	A	-
HCM 95th %tile Q(veh)	0.1	-	-	0.5	0.3	0.1	0	-	-

Intersection	
Int Delay, s/veh	2.6

Movement	EBL	EBT	EBR	WBL	WBT	WBR	NBL	NBT	NBR	SBL	SBT	SBR
Lane Configurations												
Traffic Vol, veh/h	10	15	15	5	15	20	15	120	10	10	160	5
Future Vol, veh/h	10	15	15	5	15	20	15	120	10	10	160	5
Conflicting Peds, #/hr	0	0	0	0	0	0	0	0	0	0	0	0
Sign Control	Stop	Stop	Stop	Stop	Stop	Stop	Free	Free	Free	Free	Free	Free
RT Channelized	-	-	None	-	-	None	-	-	None	-	-	None
Storage Length	-	-	-	-	-	-	-	-	-	-	-	-
Veh in Median Storage, #	-	0	-	-	0	-	-	0	-	-	0	-
Grade, %	-	0	-	-	0	-	-	0	-	-	0	-
Peak Hour Factor	98	98	98	98	98	98	98	98	98	98	98	98
Heavy Vehicles, %	0	0	0	0	0	0	0	0	0	1	1	1
Mvmt Flow	10	15	15	5	15	20	15	122	10	10	163	5

Major/Minor	Minor2			Minor1			Major1			Major2		
Conflicting Flow All	362	349	166	360	347	128	168	0	0	133	0	0
Stage 1	186	186	-	158	158	-	-	-	-	-	-	-
Stage 2	176	163	-	202	189	-	-	-	-	-	-	-
Critical Hdwy	7.1	6.5	6.2	7.1	6.5	6.2	4.1	-	-	4.11	-	-
Critical Hdwy Stg 1	6.1	5.5	-	6.1	5.5	-	-	-	-	-	-	-
Critical Hdwy Stg 2	6.1	5.5	-	6.1	5.5	-	-	-	-	-	-	-
Follow-up Hdwy	3.5	4	3.3	3.5	4	3.3	2.2	-	-	2.209	-	-
Pot Cap-1 Maneuver	598	578	884	599	580	927	1422	-	-	1458	-	-
Stage 1	820	750	-	849	771	-	-	-	-	-	-	-
Stage 2	831	767	-	805	748	-	-	-	-	-	-	-
Platoon blocked, %								-	-		-	-
Mov Cap-1 Maneuver	565	567	884	568	569	927	1422	-	-	1458	-	-
Mov Cap-2 Maneuver	565	567	-	568	569	-	-	-	-	-	-	-
Stage 1	811	744	-	840	763	-	-	-	-	-	-	-
Stage 2	788	759	-	769	742	-	-	-	-	-	-	-

Approach	EB	WB	NB	SB
HCM Control Delay, s	10.9	10.4	0.8	0.4
HCM LOS	B	B		

Minor Lane/Major Mvmt	NBL	NBT	NBR	EBLn1	WBLn1	SBL	SBT	SBR
Capacity (veh/h)	1422	-	-	654	705	1458	-	-
HCM Lane V/C Ratio	0.011	-	-	0.062	0.058	0.007	-	-
HCM Control Delay (s)	7.6	0	-	10.9	10.4	7.5	0	-
HCM Lane LOS	A	A	-	B	B	A	A	-
HCM 95th %tile Q(veh)	0	-	-	0.2	0.2	0	-	-

Intersection	
Intersection Delay, s/veh	11.6
Intersection LOS	B

Movement	EBU	EBL	EBT	EBR	WBU	WBL	WBT	WBR	NBU	NBL	NBT	NBR
Lane Configurations												
Traffic Vol, veh/h	0	5	5	5	0	290	5	75	0	10	50	140
Future Vol, veh/h	0	5	5	5	0	290	5	75	0	10	50	140
Peak Hour Factor	0.93	0.93	0.93	0.93	0.93	0.93	0.93	0.93	0.93	0.93	0.93	0.93
Heavy Vehicles, %	0	0	0	0	0	0	0	0	0	0	0	0
Mvmt Flow	0	5	5	5	0	312	5	81	0	11	54	151
Number of Lanes	0	0	1	0	0	0	1	1	0	0	1	1

Approach	EB	WB	NB
Opposing Approach	WB	EB	SB
Opposing Lanes	2	1	1
Conflicting Approach Left	SB	NB	EB
Conflicting Lanes Left	1	2	1
Conflicting Approach Right	NB	SB	WB
Conflicting Lanes Right	2	1	2
HCM Control Delay	9	13.3	9.2
HCM LOS	A	B	A

Lane	NBLn1	NBLn2	EBLn1	WBLn1	WBLn2	SBLn1
Vol Left, %	17%	0%	33%	98%	0%	45%
Vol Thru, %	83%	0%	33%	2%	0%	50%
Vol Right, %	0%	100%	33%	0%	100%	5%
Sign Control	Stop	Stop	Stop	Stop	Stop	Stop
Traffic Vol by Lane	60	140	15	295	75	100
LT Vol	10	0	5	290	0	45
Through Vol	50	0	5	5	0	50
RT Vol	0	140	5	0	75	5
Lane Flow Rate	65	151	16	317	81	108
Geometry Grp	7	7	6	7	7	6
Degree of Util (X)	0.105	0.212	0.026	0.514	0.104	0.179
Departure Headway (Hd)	5.855	5.064	5.876	5.837	4.638	5.98
Convergence, Y/N	Yes	Yes	Yes	Yes	Yes	Yes
Cap	608	702	613	612	764	595
Service Time	3.635	2.843	3.876	3.619	2.42	4.07
HCM Lane V/C Ratio	0.107	0.215	0.026	0.518	0.106	0.182
HCM Control Delay	9.3	9.2	9	14.7	8	10.4
HCM Lane LOS	A	A	A	B	A	B
HCM 95th-tile Q	0.4	0.8	0.1	2.9	0.3	0.6

Intersection	
Intersection Delay, s/veh	
Intersection LOS	

Movement	SBU	SBL	SBT	SBR
Lane Configurations				
Traffic Vol, veh/h	0	45	50	5
Future Vol, veh/h	0	45	50	5
Peak Hour Factor	0.93	0.93	0.93	0.93
Heavy Vehicles, %	2	2	2	2
Mvmt Flow	0	48	54	5
Number of Lanes	0	0	1	0

Approach	SB
Opposing Approach	NB
Opposing Lanes	2
Conflicting Approach Left	WB
Conflicting Lanes Left	2
Conflicting Approach Right	EB
Conflicting Lanes Right	1
HCM Control Delay	10.4
HCM LOS	B

Intersection	
Intersection Delay, s/veh	35.6
Intersection LOS	E

Movement	EBU	EBL	EBT	EBR	WBU	WBL	WBT	WBR	NBU	NBL	NBT	NBR	SBU	SBL	SBT	SBR
Lane Configurations																
Traffic Vol, veh/h	0	15	200	30	0	70	375	80	0	40	110	130	0	50	95	25
Future Vol, veh/h	0	15	200	30	0	70	375	80	0	40	110	130	0	50	95	25
Peak Hour Factor	0.94	0.94	0.94	0.94	0.94	0.94	0.94	0.94	0.94	0.94	0.94	0.94	0.94	0.94	0.94	0.94
Heavy Vehicles, %	0	0	0	0	0	0	0	0	0	0	0	0	0	0	0	0
Mvmt Flow	0	16	213	32	0	74	399	85	0	43	117	138	0	53	101	27
Number of Lanes	0	0	1	1	0	0	1	0	0	0	1	0	0	0	1	0

Approach	EB	WB	NB	SB
Opposing Approach	WB	EB	SB	NB
Opposing Lanes	1	2	1	1
Conflicting Approach Left	SB	NB	EB	WB
Conflicting Lanes Left	1	1	2	1
Conflicting Approach Right	NB	SB	WB	EB
Conflicting Lanes Right	1	1	1	2
HCM Control Delay	16	60.3	18.9	15.1
HCM LOS	C	F	C	C

Lane	NBLn1	EBLn1	EBLn2	WBLn1	SBLn1
Vol Left, %	14%	7%	0%	13%	29%
Vol Thru, %	39%	93%	0%	71%	56%
Vol Right, %	46%	0%	100%	15%	15%
Sign Control	Stop	Stop	Stop	Stop	Stop
Traffic Vol by Lane	280	215	30	525	170
LT Vol	40	15	0	70	50
Through Vol	110	200	0	375	95
RT Vol	130	0	30	80	25
Lane Flow Rate	298	229	32	559	181
Geometry Grp	2	7	7	5	2
Degree of Util (X)	0.573	0.474	0.059	0.989	0.377
Departure Headway (Hd)	6.928	7.459	6.703	6.374	7.507
Convergence, Y/N	Yes	Yes	Yes	Yes	Yes
Cap	521	483	533	570	477
Service Time	4.959	5.218	4.462	4.395	5.575
HCM Lane V/C Ratio	0.572	0.474	0.06	0.981	0.379
HCM Control Delay	18.9	16.8	9.9	60.3	15.1
HCM Lane LOS	C	C	A	F	C
HCM 95th-tile Q	3.6	2.5	0.2	14.1	1.7

Intersection	
Int Delay, s/veh	0.3

Movement	EBL	EBR	NBL	NBT	SBT	SBR
Lane Configurations						
Traffic Vol, veh/h	0	5	5	125	160	0
Future Vol, veh/h	0	5	5	125	160	0
Conflicting Peds, #/hr	0	0	0	0	0	0
Sign Control	Stop	Stop	Free	Free	Free	Free
RT Channelized	-	None	-	None	-	None
Storage Length	-	0	-	-	-	-
Veh in Median Storage, #	0	-	-	0	0	-
Grade, %	0	-	-	0	0	-
Peak Hour Factor	92	92	92	92	92	92
Heavy Vehicles, %	2	2	2	2	2	2
Mvmt Flow	0	5	5	136	174	0

Major/Minor	Minor2		Major1		Major2	
Conflicting Flow All	-	174	174	0	-	0
Stage 1	-	-	-	-	-	-
Stage 2	-	-	-	-	-	-
Critical Hdwy	-	6.22	4.12	-	-	-
Critical Hdwy Stg 1	-	-	-	-	-	-
Critical Hdwy Stg 2	-	-	-	-	-	-
Follow-up Hdwy	-	3.318	2.218	-	-	-
Pot Cap-1 Maneuver	0	869	1403	-	-	0
Stage 1	0	-	-	-	-	0
Stage 2	0	-	-	-	-	0
Platoon blocked, %				-	-	
Mov Cap-1 Maneuver	-	869	1403	-	-	-
Mov Cap-2 Maneuver	-	-	-	-	-	-
Stage 1	-	-	-	-	-	-
Stage 2	-	-	-	-	-	-

Approach	EB	NB	SB
HCM Control Delay, s	9.2	0.3	0
HCM LOS	A		

Minor Lane/Major Mvmt	NBL	NBT	EBLn1	SBT
Capacity (veh/h)	1403	-	869	-
HCM Lane V/C Ratio	0.004	-	0.006	-
HCM Control Delay (s)	7.6	0	9.2	-
HCM Lane LOS	A	A	A	-
HCM 95th %tile Q(veh)	0	-	0	-

Intersection	
Int Delay, s/veh	1.6

Movement	EBL	EBR	NBL	NBT	SBT	SBR
Lane Configurations						
Traffic Vol, veh/h	65	0	0	125	160	100
Future Vol, veh/h	65	0	0	125	160	100
Conflicting Peds, #/hr	0	0	0	0	0	0
Sign Control	Stop	Stop	Free	Free	Free	Free
RT Channelized	-	None	-	None	-	None
Storage Length	0	-	-	-	-	-
Veh in Median Storage, #	0	-	-	0	0	-
Grade, %	0	-	-	0	0	-
Peak Hour Factor	92	92	92	92	92	92
Heavy Vehicles, %	2	2	2	2	2	2
Mvmt Flow	71	0	0	136	174	109

Major/Minor	Minor2		Major1		Major2	
Conflicting Flow All	364	-	-	0	-	0
Stage 1	228	-	-	-	-	-
Stage 2	136	-	-	-	-	-
Critical Hdwy	6.42	-	-	-	-	-
Critical Hdwy Stg 1	5.42	-	-	-	-	-
Critical Hdwy Stg 2	5.42	-	-	-	-	-
Follow-up Hdwy	3.518	-	-	-	-	-
Pot Cap-1 Maneuver	635	0	0	-	-	-
Stage 1	810	0	0	-	-	-
Stage 2	890	0	0	-	-	-
Platoon blocked, %				-	-	-
Mov Cap-1 Maneuver	635	-	-	-	-	-
Mov Cap-2 Maneuver	635	-	-	-	-	-
Stage 1	810	-	-	-	-	-
Stage 2	890	-	-	-	-	-

Approach	EB	NB	SB
HCM Control Delay, s	11.4	0	0
HCM LOS	B		

Minor Lane/Major Mvmt	NBT	EBLn1	SBT	SBR
Capacity (veh/h)	-	635	-	-
HCM Lane V/C Ratio	-	0.111	-	-
HCM Control Delay (s)	-	11.4	-	-
HCM Lane LOS	-	B	-	-
HCM 95th %tile Q(veh)	-	0.4	-	-

Intersection	
Intersection Delay, s/veh	10.5
Intersection LOS	B

Movement	EBU	EBL	EBT	EBR	WBU	WBL	WBT	WBR	NBU	NBL	NBT	NBR
Lane Configurations												
Traffic Vol, veh/h	0	5	20	10	0	10	15	50	0	15	280	10
Future Vol, veh/h	0	5	20	10	0	10	15	50	0	15	280	10
Peak Hour Factor	0.90	0.90	0.90	0.90	0.90	0.90	0.90	0.90	0.90	0.90	0.90	0.90
Heavy Vehicles, %	0	0	0	0	0	0	0	0	0	0	0	0
Mvmt Flow	0	6	22	11	0	11	17	56	0	17	311	11
Number of Lanes	0	0	1	0	0	0	1	0	0	0	1	0

Approach	EB	WB	NB
Opposing Approach	WB	EB	SB
Opposing Lanes	1	1	1
Conflicting Approach Left	SB	NB	EB
Conflicting Lanes Left	1	1	1
Conflicting Approach Right	NB	SB	WB
Conflicting Lanes Right	1	1	1
HCM Control Delay	8.7	8.8	11
HCM LOS	A	A	B

Lane	NBLn1	EBLn1	WBLn1	SBLn1
Vol Left, %	5%	14%	13%	18%
Vol Thru, %	92%	57%	20%	78%
Vol Right, %	3%	29%	67%	4%
Sign Control	Stop	Stop	Stop	Stop
Traffic Vol by Lane	305	35	75	275
LT Vol	15	5	10	50
Through Vol	280	20	15	215
RT Vol	10	10	50	10
Lane Flow Rate	339	39	83	306
Geometry Grp	1	1	1	1
Degree of Util (X)	0.427	0.058	0.116	0.39
Departure Headway (Hd)	4.538	5.324	5.019	4.596
Convergence, Y/N	Yes	Yes	Yes	Yes
Cap	790	667	709	779
Service Time	2.583	3.398	3.086	2.642
HCM Lane V/C Ratio	0.429	0.058	0.117	0.393
HCM Control Delay	11	8.7	8.8	10.6
HCM Lane LOS	B	A	A	B
HCM 95th-tile Q	2.2	0.2	0.4	1.9

Intersection	
Intersection Delay, s/veh	
Intersection LOS	

Movement	SBU	SBL	SBT	SBR
Lane Configurations				
Traffic Vol, veh/h	0	50	215	10
Future Vol, veh/h	0	50	215	10
Peak Hour Factor	0.90	0.90	0.90	0.90
Heavy Vehicles, %	0	0	0	0
Mvmt Flow	0	56	239	11
Number of Lanes	0	0	1	0

Approach	SB
Opposing Approach	NB
Opposing Lanes	1
Conflicting Approach Left	WB
Conflicting Lanes Left	1
Conflicting Approach Right	EB
Conflicting Lanes Right	1
HCM Control Delay	10.6
HCM LOS	B

Intersection	
Int Delay, s/veh	0.3

Movement	WBL	WBR	NBT	NBR	SBL	SBT
Lane Configurations						
Traffic Vol, veh/h	5	5	295	5	5	235
Future Vol, veh/h	5	5	295	5	5	235
Conflicting Peds, #/hr	0	0	0	0	0	0
Sign Control	Stop	Stop	Free	Free	Free	Free
RT Channelized	-	None	-	None	-	None
Storage Length	0	-	-	-	-	-
Veh in Median Storage, #	0	-	0	-	-	0
Grade, %	0	-	0	-	-	0
Peak Hour Factor	81	81	81	81	81	81
Heavy Vehicles, %	0	0	0	0	0	0
Mvmt Flow	6	6	364	6	6	290

Major/Minor	Minor1		Major1		Major2	
Conflicting Flow All	669	367	0	0	370	0
Stage 1	367	-	-	-	-	-
Stage 2	302	-	-	-	-	-
Critical Hdwy	6.4	6.2	-	-	4.1	-
Critical Hdwy Stg 1	5.4	-	-	-	-	-
Critical Hdwy Stg 2	5.4	-	-	-	-	-
Follow-up Hdwy	3.5	3.3	-	-	2.2	-
Pot Cap-1 Maneuver	426	683	-	-	1200	-
Stage 1	705	-	-	-	-	-
Stage 2	755	-	-	-	-	-
Platoon blocked, %			-	-		-
Mov Cap-1 Maneuver	423	683	-	-	1200	-
Mov Cap-2 Maneuver	423	-	-	-	-	-
Stage 1	705	-	-	-	-	-
Stage 2	750	-	-	-	-	-

Approach	WB	NB	SB
HCM Control Delay, s	12.1	0	0.2
HCM LOS	B		

Minor Lane/Major Mvmt	NBT	NBR	WBLn1	SBL	SBT
Capacity (veh/h)	-	-	522	1200	-
HCM Lane V/C Ratio	-	-	0.024	0.005	-
HCM Control Delay (s)	-	-	12.1	8	0
HCM Lane LOS	-	-	B	A	A
HCM 95th %tile Q(veh)	-	-	0.1	0	-

Intersection	
Int Delay, s/veh	16.2

Movement	EBU	EBL	EBR	NBL	NBT	SBT	SBR
Lane Configurations							
Traffic Vol, veh/h	5	290	30	45	135	185	390
Future Vol, veh/h	5	290	30	45	135	185	390
Conflicting Peds, #/hr	0	0	0	0	0	0	0
Sign Control	Stop	Stop	Stop	Free	Free	Free	Free
RT Channelized	-	-	None	-	None	-	None
Storage Length	-	0	-	-	-	-	-
Veh in Median Storage, #	-	0	-	-	0	0	-
Grade, %	-	0	-	-	0	0	-
Peak Hour Factor	89	89	89	89	89	89	89
Heavy Vehicles, %	1	1	1	0	0	0	0
Mvmt Flow	6	326	34	51	152	208	438

Major/Minor	Minor2			Major1		Major2	
Conflicting Flow All	0	680	427	646	0	-	0
Stage 1	0	427	-	-	-	-	-
Stage 2	0	253	-	-	-	-	-
Critical Hdwy	-	6.41	6.21	4.1	-	-	-
Critical Hdwy Stg 1	-	5.41	-	-	-	-	-
Critical Hdwy Stg 2	-	5.41	-	-	-	-	-
Follow-up Hdwy	-	3.509	3.309	2.2	-	-	-
Pot Cap-1 Maneuver	0	418	630	949	-	-	-
Stage 1	0	660	-	-	-	-	-
Stage 2	0	791	-	-	-	-	-
Platoon blocked, %	-				-	-	-
Mov Cap-1 Maneuver	0	393	630	949	-	-	-
Mov Cap-2 Maneuver	0	393	-	-	-	-	-
Stage 1	0	660	-	-	-	-	-
Stage 2	0	744	-	-	-	-	-

Approach	EB	NB	SB
HCM Control Delay, s	52.5	2.3	0
HCM LOS	F		

Minor Lane/Major Mvmt	NBL	NBT	EBLn1	SBT	SBR
Capacity (veh/h)	949	-	407	-	-
HCM Lane V/C Ratio	0.053	-	0.883	-	-
HCM Control Delay (s)	9	0	52.5	-	-
HCM Lane LOS	A	A	F	-	-
HCM 95th %tile Q(veh)	0.2	-	9	-	-

Intersection	
Int Delay, s/veh	2.9

Movement	EBL	EBT	EBR	WBL	WBT	WBR	NBL	NBT	NBR	SBL	SBT	SBR
Lane Configurations												
Traffic Vol, veh/h	5	260	20	60	320	5	25	5	50	5	15	5
Future Vol, veh/h	5	260	20	60	320	5	25	5	50	5	15	5
Conflicting Peds, #/hr	0	0	0	0	0	0	0	0	0	0	0	0
Sign Control	Free	Free	Free	Free	Free	Free	Stop	Stop	Stop	Stop	Stop	Stop
RT Channelized	-	-	None	-	-	None	-	-	None	-	-	None
Storage Length	-	-	-	250	-	-	-	-	-	-	-	-
Veh in Median Storage, #	-	0	-	-	0	-	-	0	-	-	0	-
Grade, %	-	0	-	-	0	-	-	0	-	-	0	-
Peak Hour Factor	84	84	84	84	84	84	84	84	84	84	84	84
Heavy Vehicles, %	1	1	1	0	0	0	0	0	0	0	0	0
Mvmt Flow	6	310	24	71	381	6	30	6	60	6	18	6

Major/Minor	Major1			Major2			Minor1			Minor2		
Conflicting Flow All	387	0	0	333	0	0	872	863	321	893	872	384
Stage 1	-	-	-	-	-	-	333	333	-	527	527	-
Stage 2	-	-	-	-	-	-	539	530	-	366	345	-
Critical Hdwy	4.11	-	-	4.1	-	-	7.1	6.5	6.2	7.1	6.5	6.2
Critical Hdwy Stg 1	-	-	-	-	-	-	6.1	5.5	-	6.1	5.5	-
Critical Hdwy Stg 2	-	-	-	-	-	-	6.1	5.5	-	6.1	5.5	-
Follow-up Hdwy	2.209	-	-	2.2	-	-	3.5	4	3.3	3.5	4	3.3
Pot Cap-1 Maneuver	1177	-	-	1238	-	-	273	295	724	264	291	668
Stage 1	-	-	-	-	-	-	685	647	-	538	532	-
Stage 2	-	-	-	-	-	-	530	530	-	657	640	-
Platoon blocked, %		-	-		-	-						
Mov Cap-1 Maneuver	1177	-	-	1238	-	-	245	276	724	227	273	668
Mov Cap-2 Maneuver	-	-	-	-	-	-	245	276	-	227	273	-
Stage 1	-	-	-	-	-	-	681	643	-	535	501	-
Stage 2	-	-	-	-	-	-	478	500	-	594	636	-

Approach	EB	WB	NB	SB
HCM Control Delay, s	0.1	1.3	16	18.5
HCM LOS			C	C

Minor Lane/Major Mvmt	NBLn1	EBL	EBT	EBR	WBL	WBT	WBR	SBLn1
Capacity (veh/h)	423	1177	-	-	1238	-	-	296
HCM Lane V/C Ratio	0.225	0.005	-	-	0.058	-	-	0.101
HCM Control Delay (s)	16	8.1	0	-	8.1	-	-	18.5
HCM Lane LOS	C	A	A	-	A	-	-	C
HCM 95th %tile Q(veh)	0.9	0	-	-	0.2	-	-	0.3

Intersection	
Int Delay, s/veh	11.3

Movement	EBL	EBT	EBR	WBL	WBT	WBR	NBL	NBT	NBR	SBL	SBT	SBR
Lane Configurations												
Traffic Vol, veh/h	150	5	165	5	5	10	180	125	5	10	125	205
Future Vol, veh/h	150	5	165	5	5	10	180	125	5	10	125	205
Conflicting Peds, #/hr	0	0	0	0	0	0	0	0	0	0	0	0
Sign Control	Stop	Stop	Stop	Stop	Stop	Stop	Free	Free	Free	Free	Free	Free
RT Channelized	-	-	None	-	-	None	-	-	None	-	-	None
Storage Length	375	-	-	-	-	-	200	-	-	-	-	-
Veh in Median Storage, #	-	0	-	-	0	-	-	0	-	-	0	-
Grade, %	-	0	-	-	0	-	-	0	-	-	0	-
Peak Hour Factor	89	89	89	89	89	89	89	89	89	89	89	89
Heavy Vehicles, %	1	1	1	0	0	0	0	0	0	0	0	0
Mvmt Flow	169	6	185	6	6	11	202	140	6	11	140	230

Major/Minor	Minor2			Minor1			Major1			Major2		
Conflicting Flow All	834	829	256	922	941	143	371	0	0	146	0	0
Stage 1	278	278	-	548	548	-	-	-	-	-	-	-
Stage 2	556	551	-	374	393	-	-	-	-	-	-	-
Critical Hdwy	7.11	6.51	6.21	7.1	6.5	6.2	4.1	-	-	4.1	-	-
Critical Hdwy Stg 1	6.11	5.51	-	6.1	5.5	-	-	-	-	-	-	-
Critical Hdwy Stg 2	6.11	5.51	-	6.1	5.5	-	-	-	-	-	-	-
Follow-up Hdwy	3.509	4.009	3.309	3.5	4	3.3	2.2	-	-	2.2	-	-
Pot Cap-1 Maneuver	289	307	785	253	265	910	1199	-	-	1448	-	-
Stage 1	731	682	-	524	520	-	-	-	-	-	-	-
Stage 2	517	517	-	651	609	-	-	-	-	-	-	-
Platoon blocked, %								-	-		-	-
Mov Cap-1 Maneuver	242	253	785	164	218	910	1199	-	-	1448	-	-
Mov Cap-2 Maneuver	242	253	-	164	218	-	-	-	-	-	-	-
Stage 1	608	675	-	436	432	-	-	-	-	-	-	-
Stage 2	419	430	-	488	603	-	-	-	-	-	-	-

Approach	EB	WB	NB	SB
HCM Control Delay, s	28.8	17.5	5	0.2
HCM LOS	D	C		

Minor Lane/Major Mvmt	NBL	NBT	NBR	EBLn1	EBLn2	WBLn1	SBL	SBT	SBR
Capacity (veh/h)	1199	-	-	242	739	310	1448	-	-
HCM Lane V/C Ratio	0.169	-	-	0.696	0.258	0.072	0.008	-	-
HCM Control Delay (s)	8.6	-	-	48.2	11.6	17.5	7.5	0	-
HCM Lane LOS	A	-	-	E	B	C	A	A	-
HCM 95th %tile Q(veh)	0.6	-	-	4.6	1	0.2	0	-	-

Intersection	
Int Delay, s/veh	1.8

Movement	EBL	EBT	EBR	WBL	WBT	WBR	NBL	NBT	NBR	SBL	SBT	SBR
Lane Configurations												
Traffic Vol, veh/h	10	15	15	5	15	20	15	295	10	10	275	5
Future Vol, veh/h	10	15	15	5	15	20	15	295	10	10	275	5
Conflicting Peds, #/hr	0	0	0	0	0	0	0	0	0	0	0	0
Sign Control	Stop	Stop	Stop	Stop	Stop	Stop	Free	Free	Free	Free	Free	Free
RT Channelized	-	-	None	-	-	None	-	-	None	-	-	None
Storage Length	-	-	-	-	-	-	-	-	-	-	-	-
Veh in Median Storage, #	-	0	-	-	0	-	-	0	-	-	0	-
Grade, %	-	0	-	-	0	-	-	0	-	-	0	-
Peak Hour Factor	98	98	98	98	98	98	98	98	98	98	98	98
Heavy Vehicles, %	0	0	0	0	0	0	0	0	0	1	1	1
Mvmt Flow	10	15	15	5	15	20	15	301	10	10	281	5

Major/Minor	Minor2			Minor1			Major1			Major2		
Conflicting Flow All	659	646	283	656	643	306	286	0	0	311	0	0
Stage 1	304	304	-	337	337	-	-	-	-	-	-	-
Stage 2	355	342	-	319	306	-	-	-	-	-	-	-
Critical Hdwy	7.1	6.5	6.2	7.1	6.5	6.2	4.1	-	-	4.11	-	-
Critical Hdwy Stg 1	6.1	5.5	-	6.1	5.5	-	-	-	-	-	-	-
Critical Hdwy Stg 2	6.1	5.5	-	6.1	5.5	-	-	-	-	-	-	-
Follow-up Hdwy	3.5	4	3.3	3.5	4	3.3	2.2	-	-	2.209	-	-
Pot Cap-1 Maneuver	380	393	761	382	394	739	1288	-	-	1255	-	-
Stage 1	710	667	-	681	645	-	-	-	-	-	-	-
Stage 2	666	642	-	697	665	-	-	-	-	-	-	-
Platoon blocked, %								-	-		-	-
Mov Cap-1 Maneuver	352	384	761	357	385	739	1288	-	-	1255	-	-
Mov Cap-2 Maneuver	352	384	-	357	385	-	-	-	-	-	-	-
Stage 1	700	661	-	671	636	-	-	-	-	-	-	-
Stage 2	623	633	-	661	659	-	-	-	-	-	-	-

Approach	EB	WB	NB	SB
HCM Control Delay, s	13.6	12.8	0.4	0.3
HCM LOS	B	B		

Minor Lane/Major Mvmt	NBL	NBT	NBR	EBLn1	WBLn1	SBL	SBT	SBR
Capacity (veh/h)	1288	-	-	459	500	1255	-	-
HCM Lane V/C Ratio	0.012	-	-	0.089	0.082	0.008	-	-
HCM Control Delay (s)	7.8	0	-	13.6	12.8	7.9	0	-
HCM Lane LOS	A	A	-	B	B	A	A	-
HCM 95th %tile Q(veh)	0	-	-	0.3	0.3	0	-	-

Intersection	
Intersection Delay, s/veh	14.1
Intersection LOS	B

Movement	EBU	EBL	EBT	EBR	WBU	WBL	WBT	WBR	NBU	NBL	NBT	NBR
Lane Configurations												
Traffic Vol, veh/h	0	5	5	5	0	315	5	235	0	10	65	150
Future Vol, veh/h	0	5	5	5	0	315	5	235	0	10	65	150
Peak Hour Factor	0.93	0.93	0.93	0.93	0.93	0.93	0.93	0.93	0.93	0.93	0.93	0.93
Heavy Vehicles, %	0	0	0	0	0	0	0	0	0	0	0	0
Mvmt Flow	0	5	5	5	0	339	5	253	0	11	70	161
Number of Lanes	0	0	1	0	0	0	1	1	0	0	1	1

Approach	EB	WB	NB
Opposing Approach	WB	EB	SB
Opposing Lanes	2	1	1
Conflicting Approach Left	SB	NB	EB
Conflicting Lanes Left	1	2	1
Conflicting Approach Right	NB	SB	WB
Conflicting Lanes Right	2	1	2
HCM Control Delay	10	15.6	10.6
HCM LOS	A	C	B

Lane	NBLn1	NBLn2	EBLn1	WBLn1	WBLn2	SBLn1
Vol Left, %	13%	0%	33%	98%	0%	69%
Vol Thru, %	87%	0%	33%	2%	0%	29%
Vol Right, %	0%	100%	33%	0%	100%	2%
Sign Control	Stop	Stop	Stop	Stop	Stop	Stop
Traffic Vol by Lane	75	150	15	320	235	210
LT Vol	10	0	5	315	0	145
Through Vol	65	0	5	5	0	60
RT Vol	0	150	5	0	235	5
Lane Flow Rate	81	161	16	344	253	226
Geometry Grp	7	7	6	7	7	6
Degree of Util (X)	0.149	0.262	0.03	0.616	0.368	0.414
Departure Headway (Hd)	6.63	5.85	6.751	6.445	5.239	6.597
Convergence, Y/N	Yes	Yes	Yes	Yes	Yes	Yes
Cap	540	613	529	561	687	546
Service Time	4.377	3.597	4.814	4.181	2.975	4.639
HCM Lane V/C Ratio	0.15	0.263	0.03	0.613	0.368	0.414
HCM Control Delay	10.5	10.7	10	19	11	14.2
HCM Lane LOS	B	B	A	C	B	B
HCM 95th-tile Q	0.5	1	0.1	4.2	1.7	2

Intersection	
Intersection Delay, s/veh	
Intersection LOS	

Movement	SBU	SBL	SBT	SBR
Lane Configurations				
Traffic Vol, veh/h	0	145	60	5
Future Vol, veh/h	0	145	60	5
Peak Hour Factor	0.93	0.93	0.93	0.93
Heavy Vehicles, %	2	2	2	2
Mvmt Flow	0	156	65	5
Number of Lanes	0	0	1	0

Approach	SB
Opposing Approach	NB
Opposing Lanes	2
Conflicting Approach Left	WB
Conflicting Lanes Left	2
Conflicting Approach Right	EB
Conflicting Lanes Right	1
HCM Control Delay	14.2
HCM LOS	B

Intersection	
Intersection Delay, s/veh	128.5
Intersection LOS	F

Movement	EBU	EBL	EBT	EBR	WBU	WBL	WBT	WBR	NBU	NBL	NBT	NBR	SBU	SBL	SBT	SBR
Lane Configurations																
Traffic Vol, veh/h	0	15	300	45	0	75	545	85	0	60	120	140	0	55	105	25
Future Vol, veh/h	0	15	300	45	0	75	545	85	0	60	120	140	0	55	105	25
Peak Hour Factor	0.94	0.94	0.94	0.94	0.94	0.94	0.94	0.94	0.94	0.94	0.94	0.94	0.94	0.94	0.94	0.94
Heavy Vehicles, %	0	0	0	0	0	0	0	0	0	0	0	0	0	0	0	0
Mvmt Flow	0	16	319	48	0	80	580	90	0	64	128	149	0	59	112	27
Number of Lanes	0	0	1	1	0	0	1	0	0	0	1	0	0	0	1	0

Approach	EB	WB	NB	SB
Opposing Approach	WB	EB	SB	NB
Opposing Lanes	1	2	1	1
Conflicting Approach Left	SB	NB	EB	WB
Conflicting Lanes Left	1	1	2	1
Conflicting Approach Right	NB	SB	WB	EB
Conflicting Lanes Right	1	1	1	2
HCM Control Delay	29	252.6	29.6	20.1
HCM LOS	D	F	D	C

Lane	NBLn1	EBLn1	EBLn2	WBLn1	SBLn1
Vol Left, %	19%	5%	0%	11%	30%
Vol Thru, %	38%	95%	0%	77%	57%
Vol Right, %	44%	0%	100%	12%	14%
Sign Control	Stop	Stop	Stop	Stop	Stop
Traffic Vol by Lane	320	315	45	705	185
LT Vol	60	15	0	75	55
Through Vol	120	300	0	545	105
RT Vol	140	0	45	85	25
Lane Flow Rate	340	335	48	750	197
Geometry Grp	2	7	7	5	2
Degree of Util (X)	0.704	0.728	0.094	1.494	0.449
Departure Headway (Hd)	8.595	8.729	7.976	7.172	9.549
Convergence, Y/N	Yes	Yes	Yes	Yes	Yes
Cap	426	419	452	510	380
Service Time	6.595	6.429	5.676	5.243	7.549
HCM Lane V/C Ratio	0.798	0.8	0.106	1.471	0.518
HCM Control Delay	29.6	31.5	11.5	252.6	20.1
HCM Lane LOS	D	D	B	F	C
HCM 95th-tile Q	5.3	5.7	0.3	38	2.2

Intersection	
Int Delay, s/veh	0.2

Movement	EBL	EBR	NBL	NBT	SBT	SBR
Lane Configurations						
Traffic Vol, veh/h	0	5	5	245	310	0
Future Vol, veh/h	0	5	5	245	310	0
Conflicting Peds, #/hr	0	0	0	0	0	0
Sign Control	Stop	Stop	Free	Free	Free	Free
RT Channelized	-	None	-	None	-	None
Storage Length	-	0	-	-	-	-
Veh in Median Storage, #	0	-	-	0	0	-
Grade, %	0	-	-	0	0	-
Peak Hour Factor	92	92	92	92	92	92
Heavy Vehicles, %	2	2	2	2	2	2
Mvmt Flow	0	5	5	266	337	0

Major/Minor	Minor2		Major1		Major2	
Conflicting Flow All	-	337	337	0	-	0
Stage 1	-	-	-	-	-	-
Stage 2	-	-	-	-	-	-
Critical Hdwy	-	6.22	4.12	-	-	-
Critical Hdwy Stg 1	-	-	-	-	-	-
Critical Hdwy Stg 2	-	-	-	-	-	-
Follow-up Hdwy	-	3.318	2.218	-	-	-
Pot Cap-1 Maneuver	0	705	1222	-	-	0
Stage 1	0	-	-	-	-	0
Stage 2	0	-	-	-	-	0
Platoon blocked, %				-	-	
Mov Cap-1 Maneuver	-	705	1222	-	-	-
Mov Cap-2 Maneuver	-	-	-	-	-	-
Stage 1	-	-	-	-	-	-
Stage 2	-	-	-	-	-	-

Approach	EB	NB	SB
HCM Control Delay, s	10.1	0.2	0
HCM LOS	B		

Minor Lane/Major Mvmt	NBL	NBT	EBLn1	SBT
Capacity (veh/h)	1222	-	705	-
HCM Lane V/C Ratio	0.004	-	0.008	-
HCM Control Delay (s)	8	0	10.1	-
HCM Lane LOS	A	A	B	-
HCM 95th %tile Q(veh)	0	-	0	-

Intersection	
Int Delay, s/veh	1.9

Movement	EBL	EBR	NBL	NBT	SBT	SBR
Lane Configurations						
Traffic Vol, veh/h	80	0	0	245	310	120
Future Vol, veh/h	80	0	0	245	310	120
Conflicting Peds, #/hr	0	0	0	0	0	0
Sign Control	Stop	Stop	Free	Free	Free	Free
RT Channelized	-	None	-	None	-	None
Storage Length	0	-	-	-	-	-
Veh in Median Storage, #	0	-	-	0	0	-
Grade, %	0	-	-	0	0	-
Peak Hour Factor	92	92	92	92	92	92
Heavy Vehicles, %	2	2	2	2	2	2
Mvmt Flow	87	0	0	266	337	130

Major/Minor	Minor2		Major1		Major2	
Conflicting Flow All	668	-	-	0	-	0
Stage 1	402	-	-	-	-	-
Stage 2	266	-	-	-	-	-
Critical Hdwy	7.12	-	-	-	-	-
Critical Hdwy Stg 1	6.12	-	-	-	-	-
Critical Hdwy Stg 2	6.12	-	-	-	-	-
Follow-up Hdwy	3.518	-	-	-	-	-
Pot Cap-1 Maneuver	372	0	0	-	-	-
Stage 1	625	0	0	-	-	-
Stage 2	739	0	0	-	-	-
Platoon blocked, %				-	-	-
Mov Cap-1 Maneuver	372	-	-	-	-	-
Mov Cap-2 Maneuver	372	-	-	-	-	-
Stage 1	625	-	-	-	-	-
Stage 2	739	-	-	-	-	-

Approach	EB	NB	SB
HCM Control Delay, s	17.6	0	0
HCM LOS	C		

Minor Lane/Major Mvmt	NBT	EBLn1	SBT	SBR
Capacity (veh/h)	-	372	-	-
HCM Lane V/C Ratio	-	0.234	-	-
HCM Control Delay (s)	-	17.6	-	-
HCM Lane LOS	-	C	-	-
HCM 95th %tile Q(veh)	-	0.9	-	-

Intersection	
Intersection Delay, s/veh	10.6
Intersection LOS	B

Movement	WBU	WBL	WBR	NBU	NBL	NBT	NBR	SBU	SBL	SBT	SBR
Lane Configurations											
Traffic Vol, veh/h	0	17	50	0	25	288	14	0	50	228	11
Future Vol, veh/h	0	17	50	0	25	288	14	0	50	228	11
Peak Hour Factor	0.90	0.90	0.90	0.90	0.90	0.90	0.90	0.90	0.90	0.90	0.90
Heavy Vehicles, %	0	0	0	0	0	0	0	0	0	0	0
Mvmt Flow	0	19	56	0	28	320	16	0	56	253	12
Number of Lanes	0	1	0	0	0	1	0	0	0	1	0

Approach	WB	NB	SB
Opposing Approach		SB	NB
Opposing Lanes	0	1	1
Conflicting Approach Left	NB	NE	WB
Conflicting Lanes Left	1	1	1
Conflicting Approach Right	SB	WB	NE
Conflicting Lanes Right	1	1	1
HCM Control Delay	8.6	11	10.5
HCM LOS	A	B	B

Lane	NELn1	NBLn1	WBLn1	SBLn1
Vol Left, %	0%	8%	25%	17%
Vol Thru, %	100%	88%	0%	79%
Vol Right, %	0%	4%	75%	4%
Sign Control	Stop	Stop	Stop	Stop
Traffic Vol by Lane	0	327	67	289
LT Vol	0	25	17	50
Through Vol	0	288	0	228
RT Vol	0	14	50	11
Lane Flow Rate	0	363	74	321
Geometry Grp	1	1	1	1
Degree of Util (X)	0	0.446	0.103	0.399
Departure Headway (Hd)	5.512	4.415	4.977	4.477
Convergence, Y/N	Yes	Yes	Yes	Yes
Cap	0	817	718	803
Service Time	3.575	2.442	3.026	2.506
HCM Lane V/C Ratio	0	0.444	0.103	0.4
HCM Control Delay	8.6	11	8.6	10.5
HCM Lane LOS	N	B	A	B
HCM 95th-tile Q	0	2.3	0.3	1.9

Intersection	
Intersection Delay, s/veh	
Intersection LOS	

Movement	NEU	NEL	NER
Lane Configurations			
Traffic Vol, veh/h	0	0	0
Future Vol, veh/h	0	0	0
Peak Hour Factor	0.90	0.90	0.90
Heavy Vehicles, %	0	0	0
Mvmt Flow	0	0	0
Number of Lanes	0	0	1

Approach	NE
Opposing Approach	
Opposing Lanes	0
Conflicting Approach Left	SB
Conflicting Lanes Left	1
Conflicting Approach Right	WB
Conflicting Lanes Right	1
HCM Control Delay	0
HCM LOS	-

Intersection	
Int Delay, s/veh	1.8

Movement	EBL	EBT	EBR	WBL	WBT	WBR	NBL	NBT	NBR	SBL	SBT	SBR
Lane Configurations												
Traffic Vol, veh/h	13	0	34	5	0	5	54	304	5	5	241	21
Future Vol, veh/h	13	0	34	5	0	5	54	304	5	5	241	21
Conflicting Peds, #/hr	0	0	0	0	0	0	0	0	0	0	0	0
Sign Control	Stop	Stop	Stop	Stop	Stop	Stop	Free	Free	Free	Free	Free	Free
RT Channelized	-	-	None	-	-	None	-	-	None	-	-	None
Storage Length	-	-	-	-	-	-	-	-	-	-	-	-
Veh in Median Storage, #	-	0	-	-	0	-	-	0	-	-	0	-
Grade, %	-	0	-	-	0	-	-	0	-	-	0	-
Peak Hour Factor	81	81	81	81	81	81	81	81	81	81	81	81
Heavy Vehicles, %	0	0	0	0	0	0	0	0	0	0	0	0
Mvmt Flow	16	0	42	6	0	6	67	375	6	6	298	26

Major/Minor	Minor2			Minor1			Major1			Major2		
Conflicting Flow All	838	838	310	856	848	378	323	0	0	381	0	0
Stage 1	323	323	-	512	512	-	-	-	-	-	-	-
Stage 2	515	515	-	344	336	-	-	-	-	-	-	-
Critical Hdwy	7.1	6.5	6.2	7.1	6.5	6.2	4.1	-	-	4.1	-	-
Critical Hdwy Stg 1	6.1	5.5	-	6.1	5.5	-	-	-	-	-	-	-
Critical Hdwy Stg 2	6.1	5.5	-	6.1	5.5	-	-	-	-	-	-	-
Follow-up Hdwy	3.5	4	3.3	3.5	4	3.3	2.2	-	-	2.2	-	-
Pot Cap-1 Maneuver	288	305	735	280	301	673	1248	-	-	1189	-	-
Stage 1	693	654	-	548	540	-	-	-	-	-	-	-
Stage 2	546	538	-	676	645	-	-	-	-	-	-	-
Platoon blocked, %								-	-		-	-
Mov Cap-1 Maneuver	269	283	735	249	279	673	1248	-	-	1189	-	-
Mov Cap-2 Maneuver	269	283	-	249	279	-	-	-	-	-	-	-
Stage 1	646	650	-	511	503	-	-	-	-	-	-	-
Stage 2	504	501	-	634	641	-	-	-	-	-	-	-

Approach	EB	WB	NB	SB
HCM Control Delay, s	13.2	15.2	1.2	0.2
HCM LOS	B	C		

Minor Lane/Major Mvmt	NBL	NBT	NBR	EBLn1	WBLn1	SBL	SBT	SBR
Capacity (veh/h)	1248	-	-	497	364	1189	-	-
HCM Lane V/C Ratio	0.053	-	-	0.117	0.034	0.005	-	-
HCM Control Delay (s)	8	0	-	13.2	15.2	8	0	-
HCM Lane LOS	A	A	-	B	C	A	A	-
HCM 95th %tile Q(veh)	0.2	-	-	0.4	0.1	0	-	-

Intersection	
Int Delay, s/veh	22.6

Movement	EBU	EBL	EBR	NBL	NBT	SBT	SBR
Lane Configurations							
Traffic Vol, veh/h	5	307	33	50	135	185	418
Future Vol, veh/h	5	307	33	50	135	185	418
Conflicting Peds, #/hr	0	0	0	0	0	0	0
Sign Control	Stop	Stop	Stop	Free	Free	Free	Free
RT Channelized	-	-	None	-	None	-	None
Storage Length	-	0	-	-	-	-	-
Veh in Median Storage, #	-	0	-	-	0	0	-
Grade, %	-	0	-	-	0	0	-
Peak Hour Factor	89	89	89	89	89	89	89
Heavy Vehicles, %	1	1	1	0	0	0	0
Mvmt Flow	6	345	37	56	152	208	470

Major/Minor	Minor2			Major1		Major2	
Conflicting Flow All	0	707	443	678	0	-	0
Stage 1	0	443	-	-	-	-	-
Stage 2	0	264	-	-	-	-	-
Critical Hdwy	-	6.41	6.21	4.1	-	-	-
Critical Hdwy Stg 1	-	5.41	-	-	-	-	-
Critical Hdwy Stg 2	-	5.41	-	-	-	-	-
Follow-up Hdwy	-	3.509	3.309	2.2	-	-	-
Pot Cap-1 Maneuver	0	403	617	923	-	-	-
Stage 1	0	649	-	-	-	-	-
Stage 2	0	783	-	-	-	-	-
Platoon blocked, %	-				-	-	-
Mov Cap-1 Maneuver	0	376	617	923	-	-	-
Mov Cap-2 Maneuver	0	376	-	-	-	-	-
Stage 1	0	649	-	-	-	-	-
Stage 2	0	731	-	-	-	-	-

Approach	EB	NB	SB
HCM Control Delay, s	72.9	2.5	0
HCM LOS	F		

Minor Lane/Major Mvmt	NBL	NBT	EBLn1	SBT	SBR
Capacity (veh/h)	923	-	391	-	-
HCM Lane V/C Ratio	0.061	-	0.977	-	-
HCM Control Delay (s)	9.2	0	72.9	-	-
HCM Lane LOS	A	A	F	-	-
HCM 95th %tile Q(veh)	0.2	-	11.4	-	-

Intersection	
Int Delay, s/veh	3

Movement	EBL	EBT	EBR	WBL	WBT	WBR	NBL	NBT	NBR	SBL	SBT	SBR
Lane Configurations												
Traffic Vol, veh/h	5	297	22	60	379	5	28	5	50	5	15	5
Future Vol, veh/h	5	297	22	60	379	5	28	5	50	5	15	5
Conflicting Peds, #/hr	0	0	0	0	0	0	0	0	0	0	0	0
Sign Control	Free	Free	Free	Free	Free	Free	Stop	Stop	Stop	Stop	Stop	Stop
RT Channelized	-	-	None	-	-	None	-	-	None	-	-	None
Storage Length	-	-	-	250	-	-	-	-	-	-	-	-
Veh in Median Storage, #	-	0	-	-	0	-	-	0	-	-	0	-
Grade, %	-	0	-	-	0	-	-	0	-	-	0	-
Peak Hour Factor	84	84	84	84	84	84	84	84	84	84	84	84
Heavy Vehicles, %	1	1	1	0	0	0	0	0	0	0	0	0
Mvmt Flow	6	354	26	71	451	6	33	6	60	6	18	6

Major/Minor	Major1			Major2			Minor1			Minor2		
Conflicting Flow All	457	0	0	380	0	0	988	979	367	1008	989	454
Stage 1	-	-	-	-	-	-	379	379	-	597	597	-
Stage 2	-	-	-	-	-	-	609	600	-	411	392	-
Critical Hdwy	4.11	-	-	4.1	-	-	7.1	6.5	6.2	7.1	6.5	6.2
Critical Hdwy Stg 1	-	-	-	-	-	-	6.1	5.5	-	6.1	5.5	-
Critical Hdwy Stg 2	-	-	-	-	-	-	6.1	5.5	-	6.1	5.5	-
Follow-up Hdwy	2.209	-	-	2.2	-	-	3.5	4	3.3	3.5	4	3.3
Pot Cap-1 Maneuver	1109	-	-	1190	-	-	228	252	683	221	249	610
Stage 1	-	-	-	-	-	-	647	618	-	493	495	-
Stage 2	-	-	-	-	-	-	486	493	-	622	610	-
Platoon blocked, %		-	-		-	-						
Mov Cap-1 Maneuver	1109	-	-	1190	-	-	202	235	683	188	233	610
Mov Cap-2 Maneuver	-	-	-	-	-	-	202	235	-	188	233	-
Stage 1	-	-	-	-	-	-	642	614	-	490	465	-
Stage 2	-	-	-	-	-	-	435	464	-	558	606	-

Approach	EB	WB	NB	SB
HCM Control Delay, s	0.1	1.1	19	21.2
HCM LOS			C	C

Minor Lane/Major Mvmt	NBLn1	EBL	EBT	EBR	WBL	WBT	WBR	SBLn1
Capacity (veh/h)	356	1109	-	-	1190	-	-	252
HCM Lane V/C Ratio	0.278	0.005	-	-	0.06	-	-	0.118
HCM Control Delay (s)	19	8.3	0	-	8.2	-	-	21.2
HCM Lane LOS	C	A	A	-	A	-	-	C
HCM 95th %tile Q(veh)	1.1	0	-	-	0.2	-	-	0.4

Intersection	
Int Delay, s/veh	18.3

Movement	EBL	EBT	EBR	WBL	WBT	WBR	NBL	NBT	NBR	SBL	SBT	SBR
Lane Configurations												
Traffic Vol, veh/h	164	5	188	5	5	10	216	125	5	10	125	228
Future Vol, veh/h	164	5	188	5	5	10	216	125	5	10	125	228
Conflicting Peds, #/hr	0	0	0	0	0	0	0	0	0	0	0	0
Sign Control	Stop	Stop	Stop	Stop	Stop	Stop	Free	Free	Free	Free	Free	Free
RT Channelized	-	-	None	-	-	None	-	-	None	-	-	None
Storage Length	375	-	-	-	-	-	200	-	-	-	-	-
Veh in Median Storage, #	-	0	-	-	0	-	-	0	-	-	0	-
Grade, %	-	0	-	-	0	-	-	0	-	-	0	-
Peak Hour Factor	89	89	89	89	89	89	89	89	89	89	89	89
Heavy Vehicles, %	1	1	1	0	0	0	0	0	0	0	0	0
Mvmt Flow	184	6	211	6	6	11	243	140	6	11	140	256

Major/Minor	Minor2			Minor1			Major1			Major2		
Conflicting Flow All	928	922	269	1028	1048	143	397	0	0	146	0	0
Stage 1	291	291	-	629	629	-	-	-	-	-	-	-
Stage 2	637	631	-	399	419	-	-	-	-	-	-	-
Critical Hdwy	7.11	6.51	6.21	7.1	6.5	6.2	4.1	-	-	4.1	-	-
Critical Hdwy Stg 1	6.11	5.51	-	6.1	5.5	-	-	-	-	-	-	-
Critical Hdwy Stg 2	6.11	5.51	-	6.1	5.5	-	-	-	-	-	-	-
Follow-up Hdwy	3.509	4.009	3.309	3.5	4	3.3	2.2	-	-	2.2	-	-
Pot Cap-1 Maneuver	249	271	772	214	230	910	1173	-	-	1448	-	-
Stage 1	719	673	-	474	478	-	-	-	-	-	-	-
Stage 2	467	476	-	631	593	-	-	-	-	-	-	-
Platoon blocked, %								-	-		-	-
Mov Cap-1 Maneuver	201	213	772	127	181	910	1173	-	-	1448	-	-
Mov Cap-2 Maneuver	201	213	-	127	181	-	-	-	-	-	-	-
Stage 1	570	666	-	376	379	-	-	-	-	-	-	-
Stage 2	360	377	-	450	587	-	-	-	-	-	-	-

Approach	EB	WB	NB	SB
HCM Control Delay, s	48.9	20.4	5.5	0.2
HCM LOS	E	C		

Minor Lane/Major Mvmt	NBL	NBT	NBR	EBLn1	EBLn2	WBLn1	SBL	SBT	SBR
Capacity (veh/h)	1173	-	-	201	723	256	1448	-	-
HCM Lane V/C Ratio	0.207	-	-	0.917	0.3	0.088	0.008	-	-
HCM Control Delay (s)	8.9	-	-	92.2	12.1	20.4	7.5	0	-
HCM Lane LOS	A	-	-	F	B	C	A	A	-
HCM 95th %tile Q(veh)	0.8	-	-	7.3	1.3	0.3	0	-	-

Intersection	
Int Delay, s/veh	1.8

Movement	EBL	EBT	EBR	WBL	WBT	WBR	NBL	NBT	NBR	SBL	SBT	SBR
Lane Configurations												
Traffic Vol, veh/h	10	15	15	5	15	20	15	331	10	10	298	5
Future Vol, veh/h	10	15	15	5	15	20	15	331	10	10	298	5
Conflicting Peds, #/hr	0	0	0	0	0	0	0	0	0	0	0	0
Sign Control	Stop	Stop	Stop	Stop	Stop	Stop	Free	Free	Free	Free	Free	Free
RT Channelized	-	-	None	-	-	None	-	-	None	-	-	None
Storage Length	-	-	-	-	-	-	-	-	-	-	-	-
Veh in Median Storage, #	-	0	-	-	0	-	-	0	-	-	0	-
Grade, %	-	0	-	-	0	-	-	0	-	-	0	-
Peak Hour Factor	98	98	98	98	98	98	98	98	98	98	98	98
Heavy Vehicles, %	0	0	0	0	0	0	0	0	0	1	1	1
Mvmt Flow	10	15	15	5	15	20	15	338	10	10	304	5

Major/Minor	Minor2			Minor1			Major1			Major2		
Conflicting Flow All	718	706	307	715	703	343	309	0	0	348	0	0
Stage 1	327	327	-	373	373	-	-	-	-	-	-	-
Stage 2	391	379	-	342	330	-	-	-	-	-	-	-
Critical Hdwy	7.1	6.5	6.2	7.1	6.5	6.2	4.1	-	-	4.11	-	-
Critical Hdwy Stg 1	6.1	5.5	-	6.1	5.5	-	-	-	-	-	-	-
Critical Hdwy Stg 2	6.1	5.5	-	6.1	5.5	-	-	-	-	-	-	-
Follow-up Hdwy	3.5	4	3.3	3.5	4	3.3	2.2	-	-	2.209	-	-
Pot Cap-1 Maneuver	347	363	738	348	364	704	1263	-	-	1216	-	-
Stage 1	690	651	-	652	622	-	-	-	-	-	-	-
Stage 2	637	618	-	677	649	-	-	-	-	-	-	-
Platoon blocked, %								-	-		-	-
Mov Cap-1 Maneuver	320	354	738	323	355	704	1263	-	-	1216	-	-
Mov Cap-2 Maneuver	320	354	-	323	355	-	-	-	-	-	-	-
Stage 1	680	644	-	642	613	-	-	-	-	-	-	-
Stage 2	594	609	-	641	643	-	-	-	-	-	-	-

Approach	EB	WB	NB	SB
HCM Control Delay, s	14.3	13.5	0.3	0.3
HCM LOS	B	B		

Minor Lane/Major Mvmt	NBL	NBT	NBR	EBLn1	WBLn1	SBL	SBT	SBR
Capacity (veh/h)	1263	-	-	426	464	1216	-	-
HCM Lane V/C Ratio	0.012	-	-	0.096	0.088	0.008	-	-
HCM Control Delay (s)	7.9	0	-	14.3	13.5	8	0	-
HCM Lane LOS	A	A	-	B	B	A	A	-
HCM 95th %tile Q(veh)	0	-	-	0.3	0.3	0	-	-

Intersection	
Intersection Delay, s/veh	14.8
Intersection LOS	B

Movement	EBU	EBL	EBT	EBR	WBU	WBL	WBT	WBR	NBU	NBL	NBT	NBR
Lane Configurations												
Traffic Vol, veh/h	0	5	5	5	0	315	5	269	0	10	67	150
Future Vol, veh/h	0	5	5	5	0	315	5	269	0	10	67	150
Peak Hour Factor	0.93	0.93	0.93	0.93	0.93	0.93	0.93	0.93	0.93	0.93	0.93	0.93
Heavy Vehicles, %	0	0	0	0	0	0	0	0	0	0	0	0
Mvmt Flow	0	5	5	5	0	339	5	289	0	11	72	161
Number of Lanes	0	0	1	0	0	0	1	1	0	0	1	1

Approach	EB	WB	NB
Opposing Approach	WB	EB	SB
Opposing Lanes	2	1	1
Conflicting Approach Left	SB	NB	EB
Conflicting Lanes Left	1	2	1
Conflicting Approach Right	NB	SB	WB
Conflicting Lanes Right	2	1	2
HCM Control Delay	10.2	16.2	10.9
HCM LOS	B	C	B

Lane	NBLn1	NBLn2	EBLn1	WBLn1	WBLn2	SBLn1
Vol Left, %	13%	0%	33%	98%	0%	72%
Vol Thru, %	87%	0%	33%	2%	0%	26%
Vol Right, %	0%	100%	33%	0%	100%	2%
Sign Control	Stop	Stop	Stop	Stop	Stop	Stop
Traffic Vol by Lane	77	150	15	320	269	233
LT Vol	10	0	5	315	0	167
Through Vol	67	0	5	5	0	61
RT Vol	0	150	5	0	269	5
Lane Flow Rate	83	161	16	344	289	251
Geometry Grp	7	7	6	7	7	6
Degree of Util (X)	0.156	0.268	0.031	0.626	0.429	0.465
Departure Headway (Hd)	6.763	5.984	6.923	6.546	5.339	6.676
Convergence, Y/N	Yes	Yes	Yes	Yes	Yes	Yes
Cap	529	598	515	551	674	539
Service Time	4.517	3.737	4.998	4.288	3.081	4.722
HCM Lane V/C Ratio	0.157	0.269	0.031	0.624	0.429	0.466
HCM Control Delay	10.8	10.9	10.2	19.7	12.1	15.4
HCM Lane LOS	B	B	B	C	B	C
HCM 95th-tile Q	0.5	1.1	0.1	4.3	2.2	2.4

Intersection	
Intersection Delay, s/veh	
Intersection LOS	

Movement	SBU	SBL	SBT	SBR
Lane Configurations				
Traffic Vol, veh/h	0	167	61	5
Future Vol, veh/h	0	167	61	5
Peak Hour Factor	0.93	0.93	0.93	0.93
Heavy Vehicles, %	2	2	2	2
Mvmt Flow	0	180	66	5
Number of Lanes	0	0	1	0

Approach	SB
Opposing Approach	NB
Opposing Lanes	2
Conflicting Approach Left	WB
Conflicting Lanes Left	2
Conflicting Approach Right	EB
Conflicting Lanes Right	1
HCM Control Delay	15.4
HCM LOS	C

Intersection	
Intersection Delay, s/veh	149.7
Intersection LOS	F

Movement	EBU	EBL	EBT	EBR	WBU	WBL	WBT	WBR	NBU	NBL	NBT	NBR	SBU	SBL	SBT	SBR
Lane Configurations																
Traffic Vol, veh/h	0	15	320	47	0	75	576	85	0	63	120	140	0	55	105	25
Future Vol, veh/h	0	15	320	47	0	75	576	85	0	63	120	140	0	55	105	25
Peak Hour Factor	0.94	0.94	0.94	0.94	0.94	0.94	0.94	0.94	0.94	0.94	0.94	0.94	0.94	0.94	0.94	0.94
Heavy Vehicles, %	0	0	0	0	0	0	0	0	0	0	0	0	0	0	0	0
Mvmt Flow	0	16	340	50	0	80	613	90	0	67	128	149	0	59	112	27
Number of Lanes	0	0	1	1	0	0	1	0	0	0	1	0	0	0	1	0

Approach	EB	WB	NB	SB
Opposing Approach	WB	EB	SB	NB
Opposing Lanes	1	2	1	1
Conflicting Approach Left	SB	NB	EB	WB
Conflicting Lanes Left	1	1	2	1
Conflicting Approach Right	NB	SB	WB	EB
Conflicting Lanes Right	1	1	1	2
HCM Control Delay	33.7	294	31.7	21
HCM LOS	D	F	D	C

Lane	NBLn1	EBLn1	EBLn2	WBLn1	SBLn1
Vol Left, %	20%	4%	0%	10%	30%
Vol Thru, %	37%	96%	0%	78%	57%
Vol Right, %	43%	0%	100%	12%	14%
Sign Control	Stop	Stop	Stop	Stop	Stop
Traffic Vol by Lane	323	335	47	736	185
LT Vol	63	15	0	75	55
Through Vol	120	320	0	576	105
RT Vol	140	0	47	85	25
Lane Flow Rate	344	356	50	783	197
Geometry Grp	2	7	7	5	2
Degree of Util (X)	0.721	0.779	0.099	1.589	0.456
Departure Headway (Hd)	8.892	8.934	8.181	7.304	9.925
Convergence, Y/N	Yes	Yes	Yes	Yes	Yes
Cap	409	410	441	501	366
Service Time	6.892	6.634	5.881	5.38	7.925
HCM Lane V/C Ratio	0.841	0.868	0.113	1.563	0.538
HCM Control Delay	31.7	36.8	11.8	294	21
HCM Lane LOS	D	E	B	F	C
HCM 95th-tile Q	5.6	6.6	0.3	42.7	2.3

Intersection	
Int Delay, s/veh	2

Movement	EBT	EBR	WBL	WBT	NBL	NBR
Lane Configurations						
Traffic Vol, veh/h	35	4	14	40	4	9
Future Vol, veh/h	35	4	14	40	4	9
Conflicting Peds, #/hr	0	0	0	0	0	0
Sign Control	Free	Free	Free	Free	Stop	Stop
RT Channelized	-	None	-	None	-	None
Storage Length	-	-	-	-	0	-
Veh in Median Storage, #	0	-	-	0	0	-
Grade, %	0	-	-	0	0	-
Peak Hour Factor	92	92	92	92	92	92
Heavy Vehicles, %	2	2	2	2	2	2
Mvmt Flow	38	4	15	43	4	10

Major/Minor	Major1		Major2		Minor1	
Conflicting Flow All	0	0	42	0	114	40
Stage 1	-	-	-	-	40	-
Stage 2	-	-	-	-	74	-
Critical Hdwy	-	-	4.12	-	6.42	6.22
Critical Hdwy Stg 1	-	-	-	-	5.42	-
Critical Hdwy Stg 2	-	-	-	-	5.42	-
Follow-up Hdwy	-	-	2.218	-	3.518	3.318
Pot Cap-1 Maneuver	-	-	1567	-	882	1031
Stage 1	-	-	-	-	982	-
Stage 2	-	-	-	-	949	-
Platoon blocked, %	-	-		-		
Mov Cap-1 Maneuver	-	-	1567	-	873	1031
Mov Cap-2 Maneuver	-	-	-	-	873	-
Stage 1	-	-	-	-	982	-
Stage 2	-	-	-	-	940	-

Approach	EB	WB	NB
HCM Control Delay, s	0	1.9	8.7
HCM LOS			A

Minor Lane/Major Mvmt	NBLn1	EBT	EBR	WBL	WBT
Capacity (veh/h)	977	-	-	1567	-
HCM Lane V/C Ratio	0.014	-	-	0.01	-
HCM Control Delay (s)	8.7	-	-	7.3	0
HCM Lane LOS	A	-	-	A	A
HCM 95th %tile Q(veh)	0	-	-	0	-

Intersection	
Int Delay, s/veh	0.2

Movement	EBL	EBR	NBL	NBT	SBT	SBR
Lane Configurations						
Traffic Vol, veh/h	0	5	5	259	333	0
Future Vol, veh/h	0	5	5	259	333	0
Conflicting Peds, #/hr	0	0	0	0	0	0
Sign Control	Stop	Stop	Free	Free	Free	Free
RT Channelized	-	None	-	None	-	None
Storage Length	-	0	-	-	-	-
Veh in Median Storage, #	0	-	-	0	0	-
Grade, %	0	-	-	0	0	-
Peak Hour Factor	92	92	92	92	92	92
Heavy Vehicles, %	2	2	2	2	2	2
Mvmt Flow	0	5	5	282	362	0

Major/Minor	Minor2		Major1		Major2	
Conflicting Flow All	-	362	362	0	-	0
Stage 1	-	-	-	-	-	-
Stage 2	-	-	-	-	-	-
Critical Hdwy	-	6.22	4.12	-	-	-
Critical Hdwy Stg 1	-	-	-	-	-	-
Critical Hdwy Stg 2	-	-	-	-	-	-
Follow-up Hdwy	-	3.318	2.218	-	-	-
Pot Cap-1 Maneuver	0	683	1197	-	-	0
Stage 1	0	-	-	-	-	0
Stage 2	0	-	-	-	-	0
Platoon blocked, %				-	-	
Mov Cap-1 Maneuver	-	683	1197	-	-	-
Mov Cap-2 Maneuver	-	-	-	-	-	-
Stage 1	-	-	-	-	-	-
Stage 2	-	-	-	-	-	-

Approach	EB	NB	SB
HCM Control Delay, s	10.3	0.2	0
HCM LOS	B		

Minor Lane/Major Mvmt	NBL	NBT	EBLn1	SBT
Capacity (veh/h)	1197	-	683	-
HCM Lane V/C Ratio	0.005	-	0.008	-
HCM Control Delay (s)	8	0	10.3	-
HCM Lane LOS	A	A	B	-
HCM 95th %tile Q(veh)	0	-	0	-

Intersection	
Int Delay, s/veh	1.8

Movement	EBL	EBR	NBL	NBT	SBT	SBR
Lane Configurations						
Traffic Vol, veh/h	86	0	0	259	333	130
Future Vol, veh/h	86	0	0	259	333	130
Conflicting Peds, #/hr	0	0	0	0	0	0
Sign Control	Stop	Stop	Free	Free	Free	Free
RT Channelized	-	None	-	None	-	None
Storage Length	0	-	-	-	-	-
Veh in Median Storage, #	0	-	-	0	0	-
Grade, %	0	-	-	0	0	-
Peak Hour Factor	92	92	92	92	92	92
Heavy Vehicles, %	2	2	2	2	2	2
Mvmt Flow	93	0	0	282	362	141

Major/Minor	Minor2		Major1		Major2	
Conflicting Flow All	715	-	-	0	-	0
Stage 1	433	-	-	-	-	-
Stage 2	282	-	-	-	-	-
Critical Hdwy	6.42	-	-	-	-	-
Critical Hdwy Stg 1	5.42	-	-	-	-	-
Critical Hdwy Stg 2	5.42	-	-	-	-	-
Follow-up Hdwy	3.518	-	-	-	-	-
Pot Cap-1 Maneuver	397	0	0	-	-	-
Stage 1	654	0	0	-	-	-
Stage 2	766	0	0	-	-	-
Platoon blocked, %				-	-	-
Mov Cap-1 Maneuver	397	-	-	-	-	-
Mov Cap-2 Maneuver	397	-	-	-	-	-
Stage 1	654	-	-	-	-	-
Stage 2	766	-	-	-	-	-

Approach	EB	NB	SB
HCM Control Delay, s	16.8	0	0
HCM LOS	C		

Minor Lane/Major Mvmt	NBT	EBLn1	SBT	SBR
Capacity (veh/h)	-	397	-	-
HCM Lane V/C Ratio	-	0.235	-	-
HCM Control Delay (s)	-	16.8	-	-
HCM Lane LOS	-	C	-	-
HCM 95th %tile Q(veh)	-	0.9	-	-

Appendix D: WSDOT Left and Right-Turn Lane Exhibits

Exhibit 1310-7a Left-Turn Storage Guidelines: Two-Lane, Unsignalized

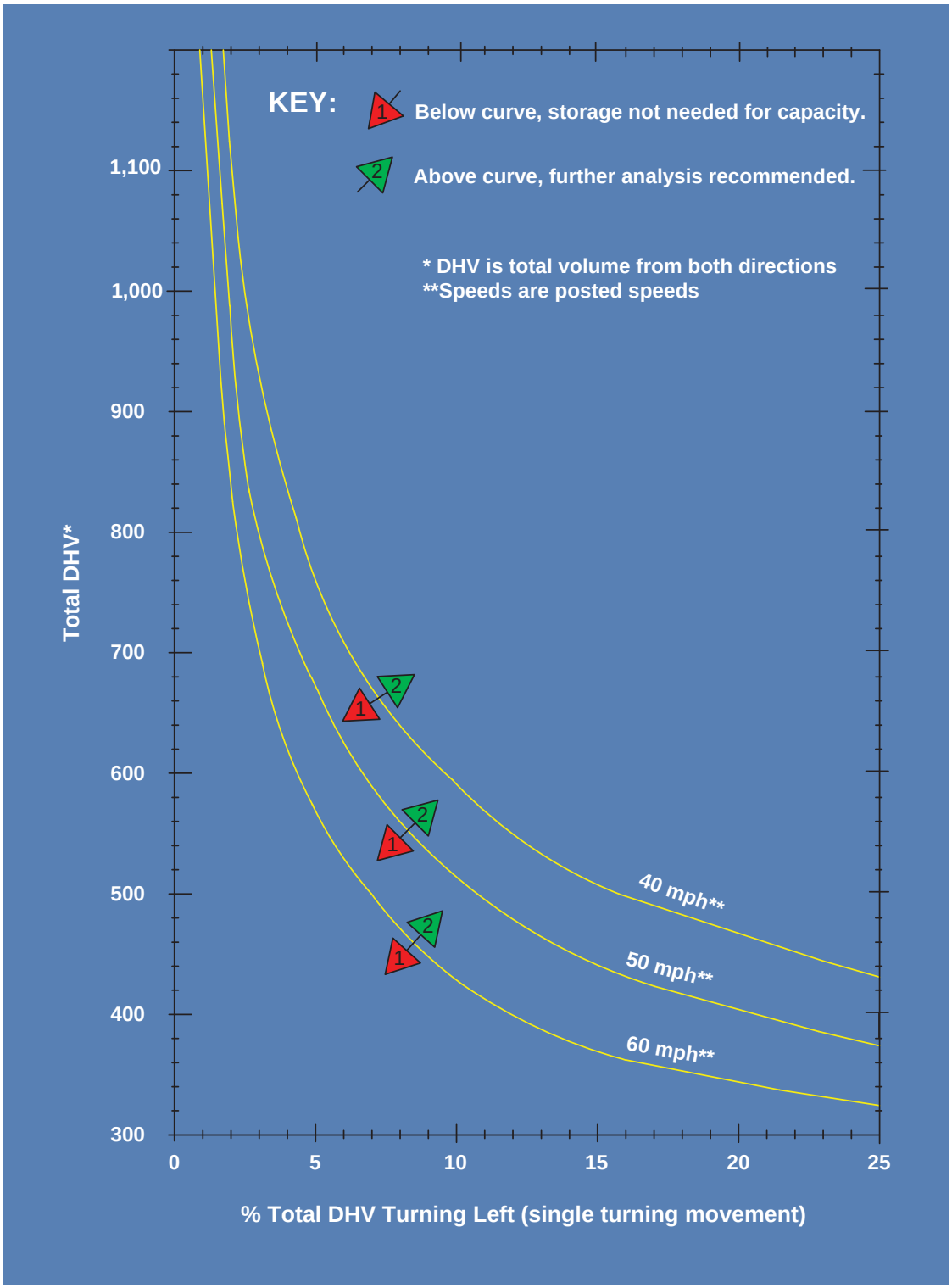

Exhibit 1310-11 Right-Turn Lane Guidelines

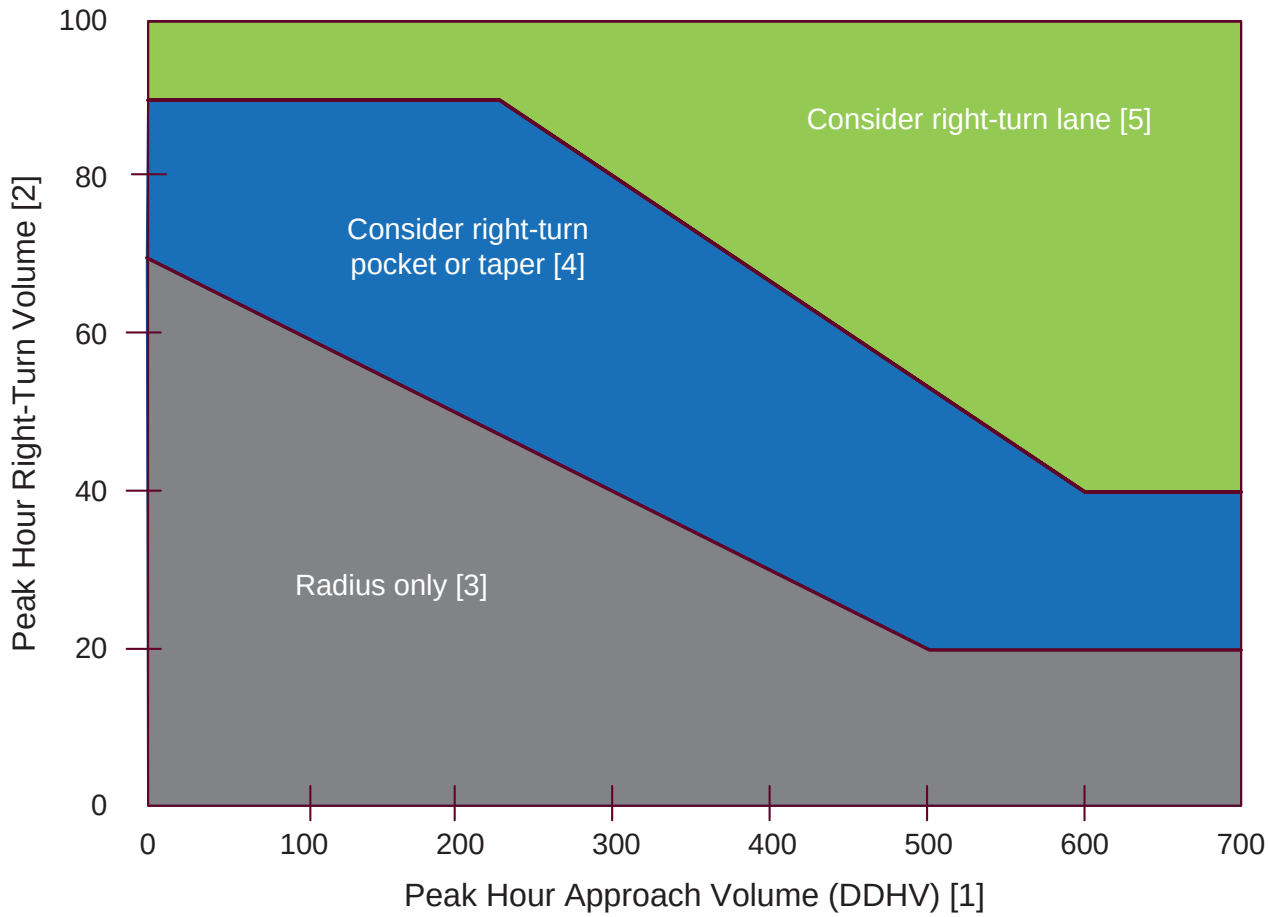

Notes:

[1] For two-lane highways, use the peak hour DDHV (through + right-turn).
For multilane, high-speed highways (posted speed 45 mph or above), use the right-lane peak hour approach volume (through + right-turn).

[2] When all three of the following conditions are met, reduce the right-turn DDHV by 20:

- The posted speed is 45 mph or below
- The right-turn volume is greater than 40 VPH
- The peak hour approach volume (DDHV) is less than 300 VPH

[3] For right-turn corner design, see Exhibit 1310-6.

[4] For right-turn pocket or taper design, see Exhibit 1310-12.

[5] For right-turn lane design, see Exhibit 1310-13.